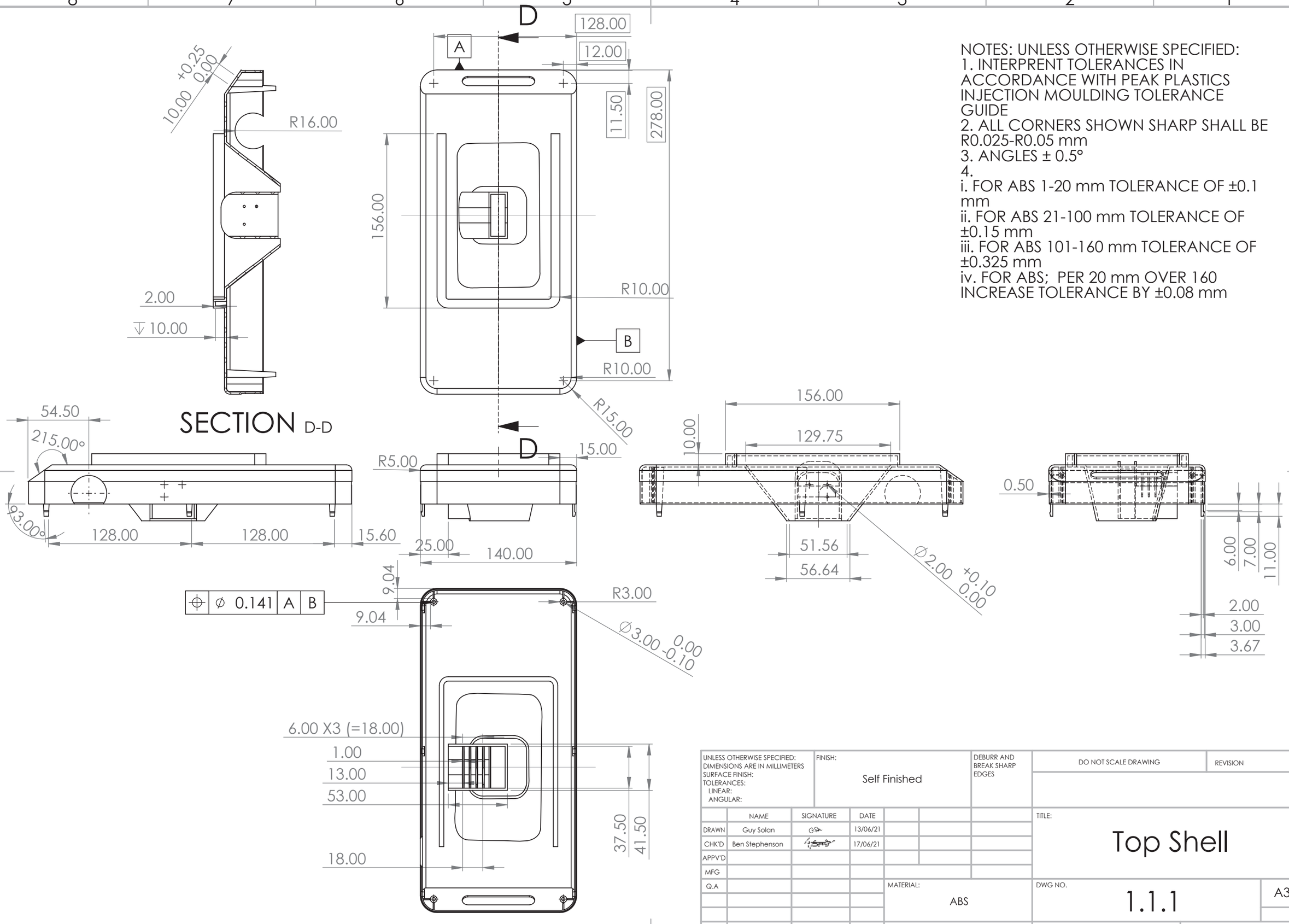

NOTES: UNLESS OTHERWISE SPECIFIED:
1. INTERPRENT TOLERANCES IN ACCORDANCE WITH PEAK PLASTICS INJECTION MOULDING TOLERANCE GUIDE
2. ALL CORNERS SHOWN SHARP SHALL BE R0.025-R0.05 mm
3. ANGLES ± 0.5°
4.
i. FOR ABS 1-20 mm TOLERANCE OF ±0.1 mm
ii. FOR ABS 21-100 mm TOLERANCE OF ±0.15 mm
iii. FOR ABS 101-160 mm TOLERANCE OF ±0.325 mm
iv. FOR ABS; PER 20 mm OVER 160 INCREASE TOLERANCE BY ±0.08 mm

UNLESS OTHERWISE SPECIFIED: DIMENSIONS ARE IN MILLIMETERS SURFACE FINISH: TOLERANCES: LINEAR: ANGULAR:	FINISH: Self Finished			DEBURR AND BREAK SHARP EDGES	DO NOT SCALE DRAWING	REVISION
	NAME	SIGNATURE	DATE		TITLE: Top Shell	
DRAWN	Guy Solan		13/06/21			
CHK'D	Ben Stephenson		17/06/21			
APPV'D						
MFG						
Q.A				MATERIAL: ABS	DWG NO. 1.1.1	A3
				WEIGHT: 173 g	SCALE:1:3	SHEET 1 OF 1

SOLIDWORKS Educational Product. For Instructional Use Only.