Serial Peripheral Interface (SPI)

- Synchronous full-duplex communication
- Can have multiple slave devices
- No flow control or acknowledgment
- Slave cannot communicate with slave directly.

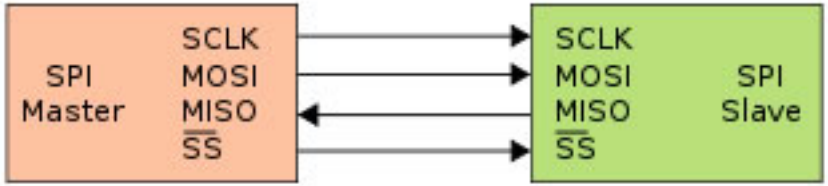

Serial Peripheral Interface
http://upload.wikimedia.org/wikipedia/commons/thumb/e/ed/SPI_single_slave.svg/350px-SPI_single_slave.svg.png

SCLK: serial clock

SS: slave select (active low)

MOSI: master out slave in

MISO: master in slave out

SPI – Point-to-point and Daisy Chain

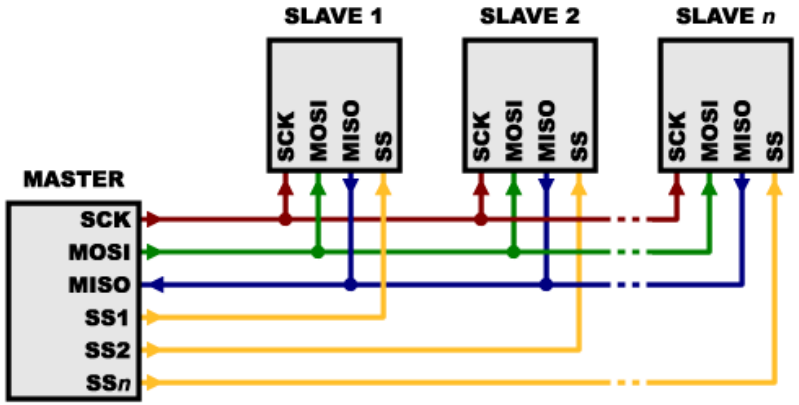

Point-to-point

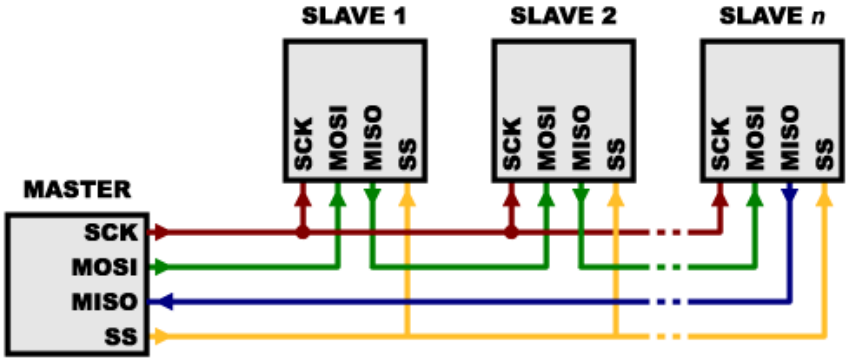

Daisy Chain

SCLK: serial clock

SS: slave select (active low)

MOSI: master out slave in

MISO: master in slave out

Pictures: https://learn.sparkfun.com/tutorials/serial-peripheral-interface-spi/

Data Exchange

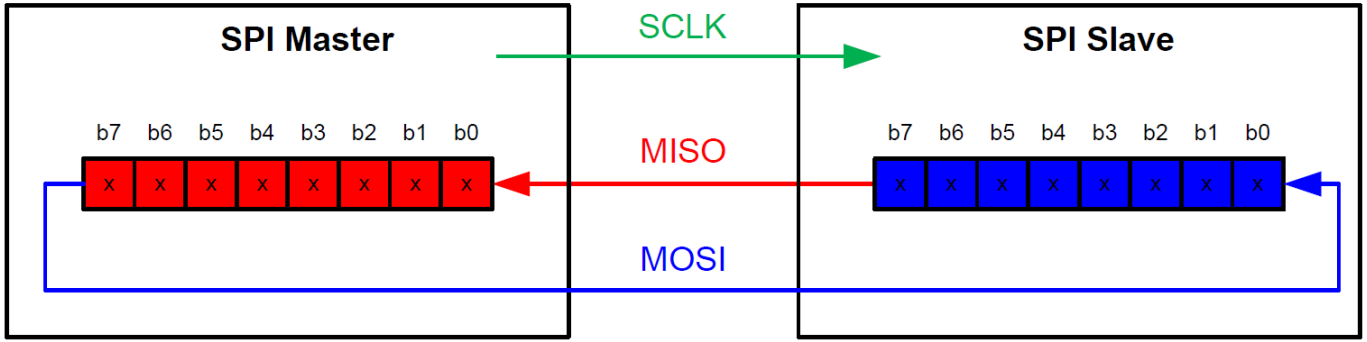

- Master has to provide clock to slave
- Synchronous exchange: for each clock pulse, a bit is shifted out and another bit is shifted in at the same time. This process stops when all bits are swapped.
- Only master can start the data transfer

Clock

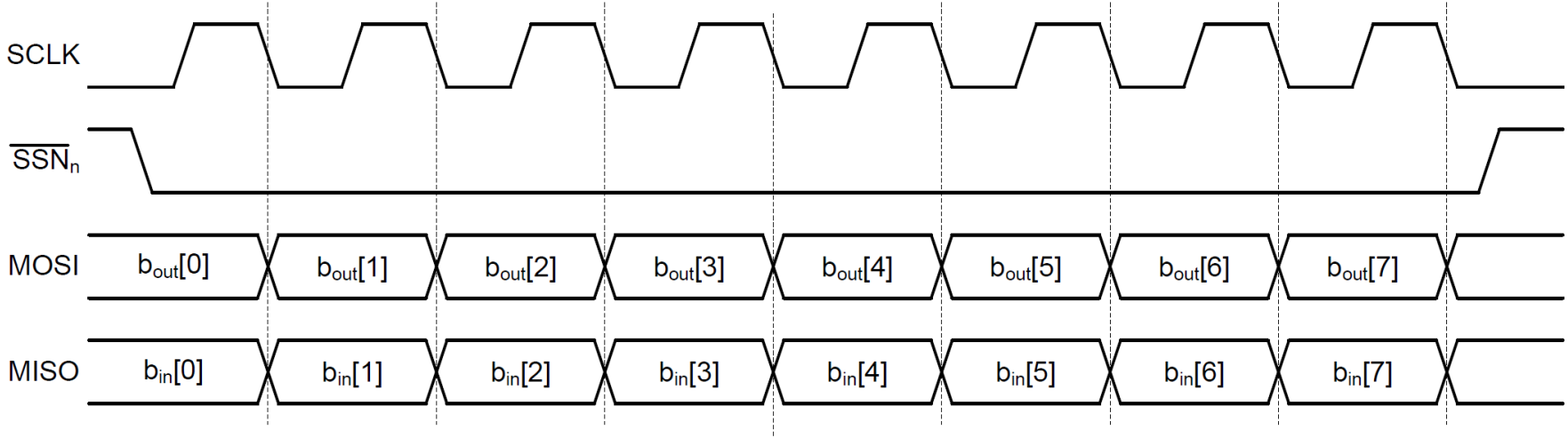
SCLK
$\overline{SSN_n}$
MOSI
$b_{out}[0]$
$b_{out}[1]$
$b_{out}[2]$
$b_{out}[3]$
$b_{out}[4]$
$b_{out}[5]$
$b_{out}[6]$
$b_{out}[7]$
MISO
$b_{in}[0]$
$b_{in}[1]$
$b_{in}[2]$
$b_{in}[3]$
$b_{in}[4]$
$b_{in}[5]$
$b_{in}[6]$
$b_{in}[7]$

SPI: Pros and Cons

- Pros
  - Simplest way to connect 1 peripheral to a micro
  - Fast (10s of Mbits/s, not on MSP) because all lines actively driven, unlike I2C
  - Clock does not need to be precise
  - Nice for connecting 1 slave
- Cons
  - No built-in acknowledgement of data
  - Not very good for multiple slaves
  - Requires 4 wires
  - 3 wire variants exist…some get rid of full duplex and share a data line, some get rid of slave select

Inter-Integrated Circuit (I2C)

- Designed for low-cost, medium data rate applications by Philips in the early 1980's
  - Original purpose: connect a CPU to peripheral chips in a TV-set
  - Today: a de-facto standard for 2-wire communications
  - Since October 10, 2006, no licensing fees are required to implement the I^2C protocol. However, fees are still required to obtain I^2C slave addresses allocated by NXP (acquired Philips).
- Characteristics
  - Serial, byte-oriented
  - Multi-master, multi-slave
  - Two bidirectional open-drain lines, plus ground
    - Serial Data Line (SDA)
    - Serial Clock Line (SCL)
    - SDA and SCL need to pull up with resistors

Inter-Integrated Circuit (I2C)

- A master device, such as the RPi, controls the bus, and many addressable slave devices can be attached to the same two wires.

- Up to 100 kbit/s in the standard mode, up to 400 kbit/s in the fast mode, and up to 3.4 Mbit/s in the high-speed mode.

- SDA and SCL have to be open-drain
  - Connected to positive if the output is `1`
  - In high impedance state if the output is `0`

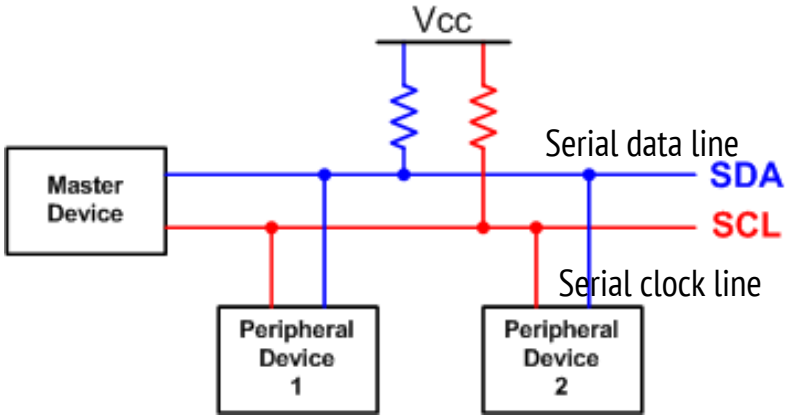

- Each Device has an unique address (7, 10 or 16 bits). Address 0 used for broadcast

https://learn.adafruit.com/i2c-addresses/the-list

Timing Diagram

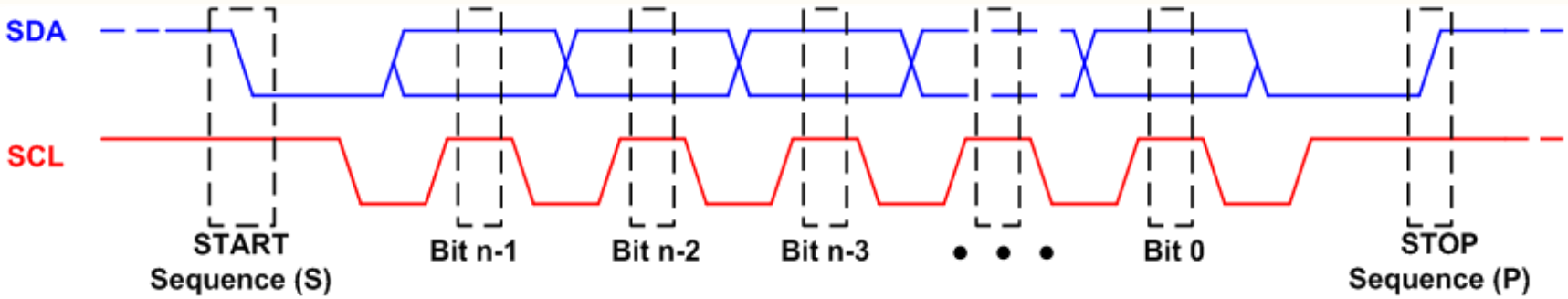

- A **START** condition is a high-to-low transition on SDA when SCL is high.
- A **STOP** condition is a low to high transition on SDA when SCL is high.
- The address and the data bytes are sent most significant bit first.
- Master generates the clock signal and sends it to the slave during data transfer

Example: Write 1 byte to device register

- Master sends a *start bit* (i.e., it pulls SDA low, while SCL is high).
- While the clock toggles, the 7-bit slave address is transmitted one bit at a time.
- A read bit (1) or write bit (0) is sent, depending on whether the master wants to read or write to/from a slave register.
- The slave responds with an *acknowledge bit* (ACK = 0).
- In write mode, the master sends a byte of data one bit at a time, after which the slave sends back an ACK bit. To write to a register, the register address is sent, followed by the data value to be written.
- Finally, to conclude communication, the master sends a *stop bit* (i.e., it allows SDA to float high, while SCL is high).

I2C Addressing

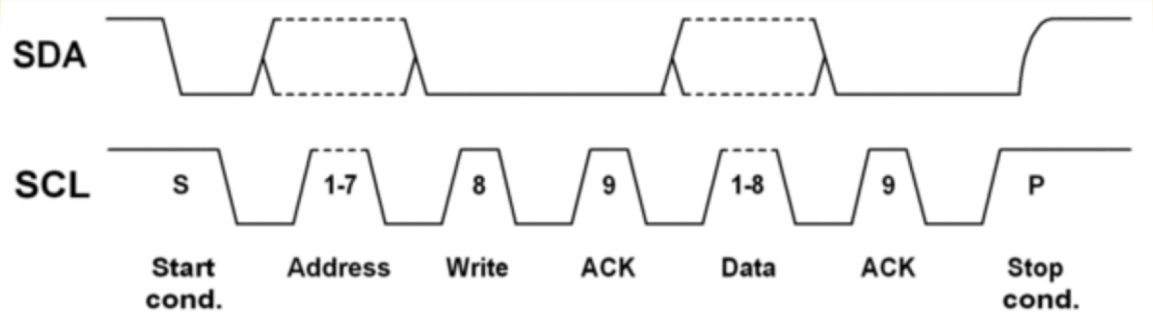

Repeated Start Condition

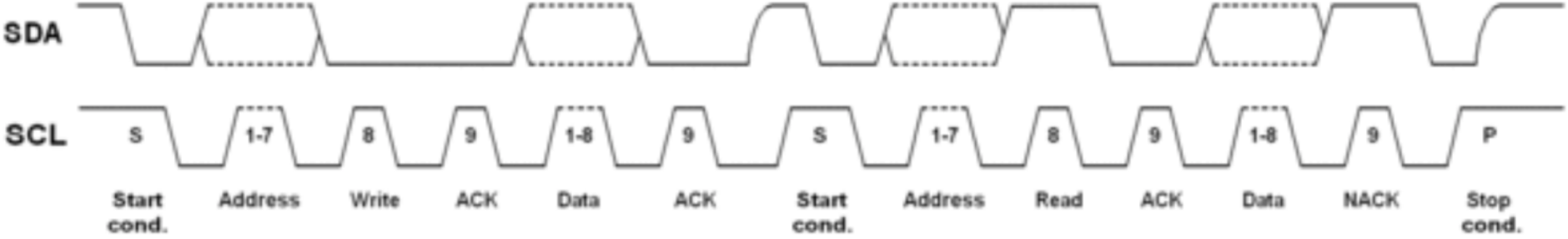

Is it better than SPI?

- SPI requires 4 lines
- SPI allows only one Master
- SPI allows high data rate (clock rate up to 10MHz in some devices) full duplex connections
- In SPI, the slave devices are not addressable (CS line used)
- More Information:
  - https://www.i2c-bus.org/specification/

Universal Asynchronous Receiver and Transmitter (UART)

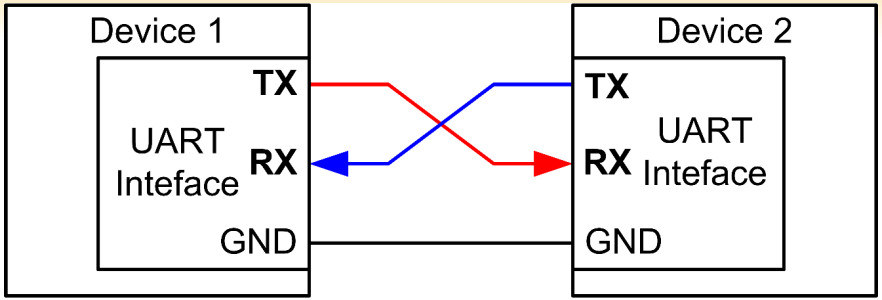

- Universal
  - Programmable format, speed, etc.
- Asynchronous
  - Sender provides no clock signal to receivers
- Half Duplex
- Any node can initiate communication
- Two lanes are independent of each other

Data Frame

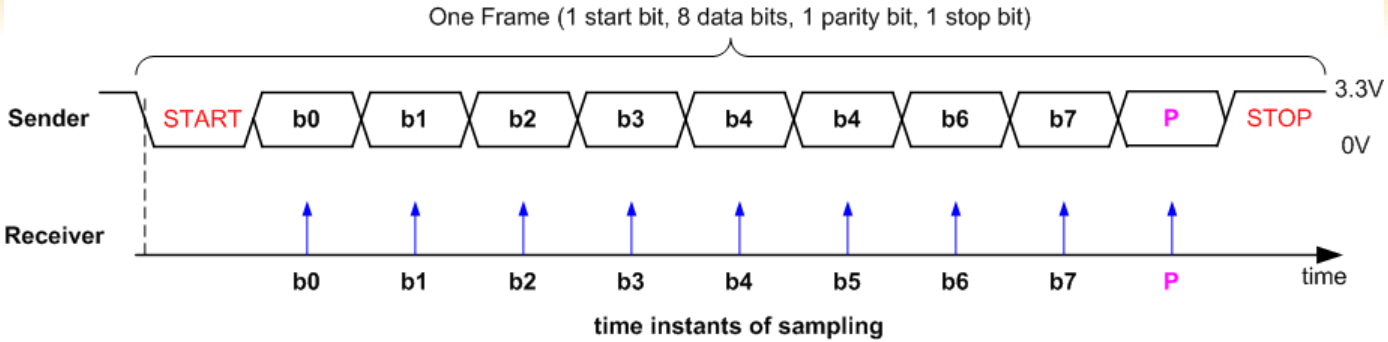

- Sender and receiver uses the same transmission speed (10% clock shift/difference is tolerated)
- Data frame
  - One start bit
  - Data (LSB first or MSB, and size of 7, 8, 9 bits)
  - Optional parity bit
  - One or two stop bit

Baud Rate

- Historically used in telecommunication to represent the number of pulses physically transferred per second
- In digital communication, baud rate is the number of bits physically transferred per second
- Example:
  - Baud rate is 9600
  - each frame: a start bit, 8 data bits, a stop bit, and no parity bit.
  - Transmission rate of actual data
    - ~~9600/8 = 1200 bytes/second~~
    - 9600/(1 + 8 + 1) = 960 bytes/second
  - The start and stop bits are the protocol overhead

Error Detection

- Even Parity: total number of “1” bits in data and parity is even
- Odd Parity: total number of “1” bits in data and parity is odd
- Example: Data = 10101011 (five “1” bits)
  - The parity bit should be 0 for odd parity and 1 for even parity
- This can detect single-bit data corruption

Controller Area Network (CAN) Bus

- Serial communication
- Multi-Master Protocol
- Compact
  - Twisted Pair Bus line
- 1 Megabit per second

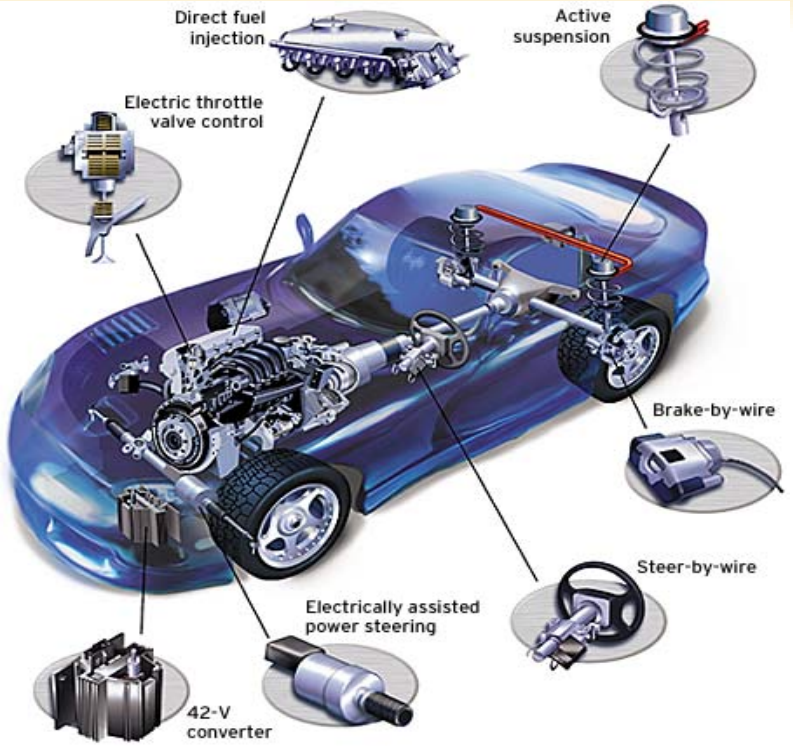

Before CAN

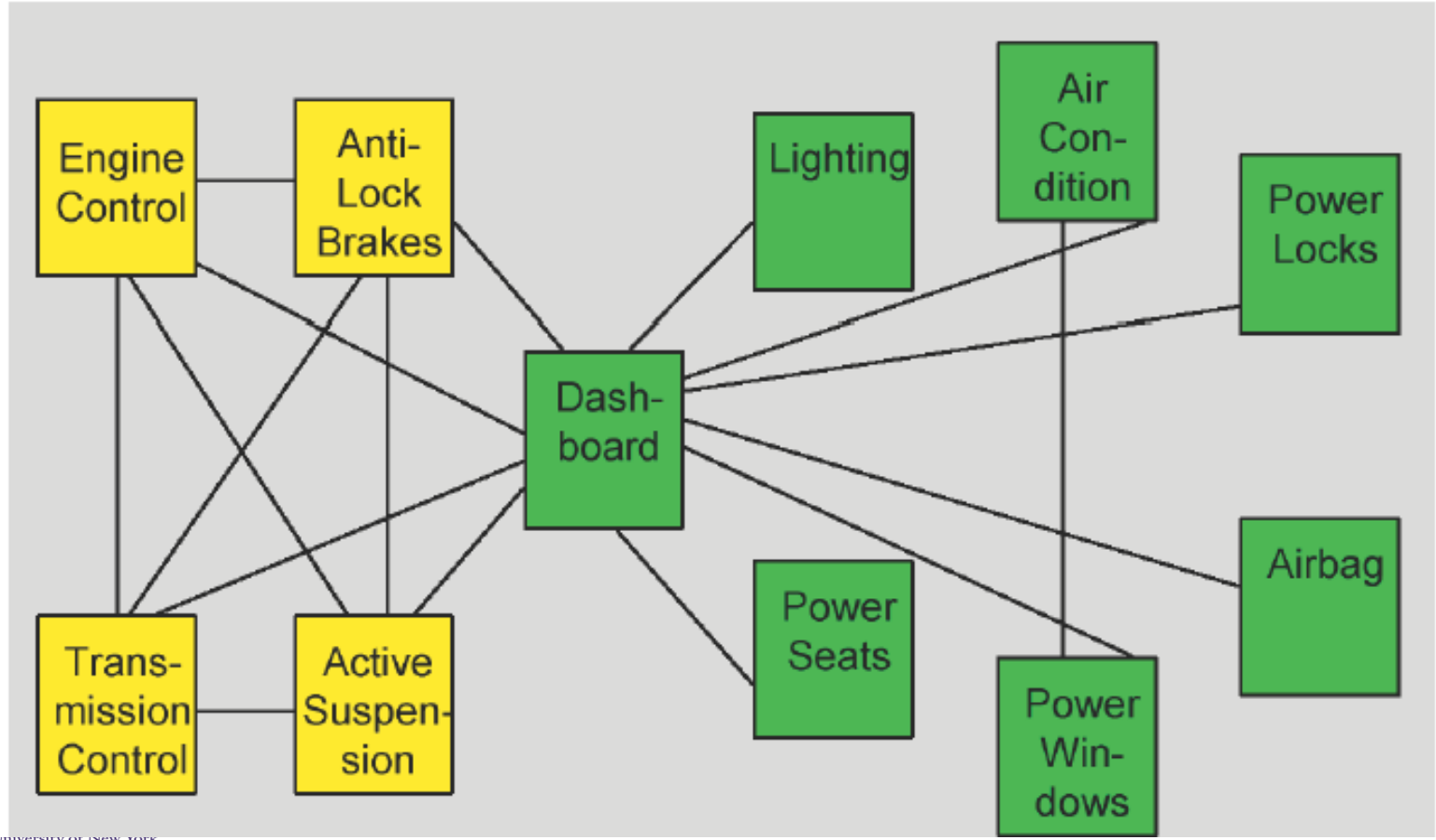
Engine Control
Anti-Lock Brakes
Lighting
Air Con-dition
Power Locks
Dash-board
Airbag
Power Seats
Trans-mission Control
Active Suspen-sion
Power Win-dows

After CAN

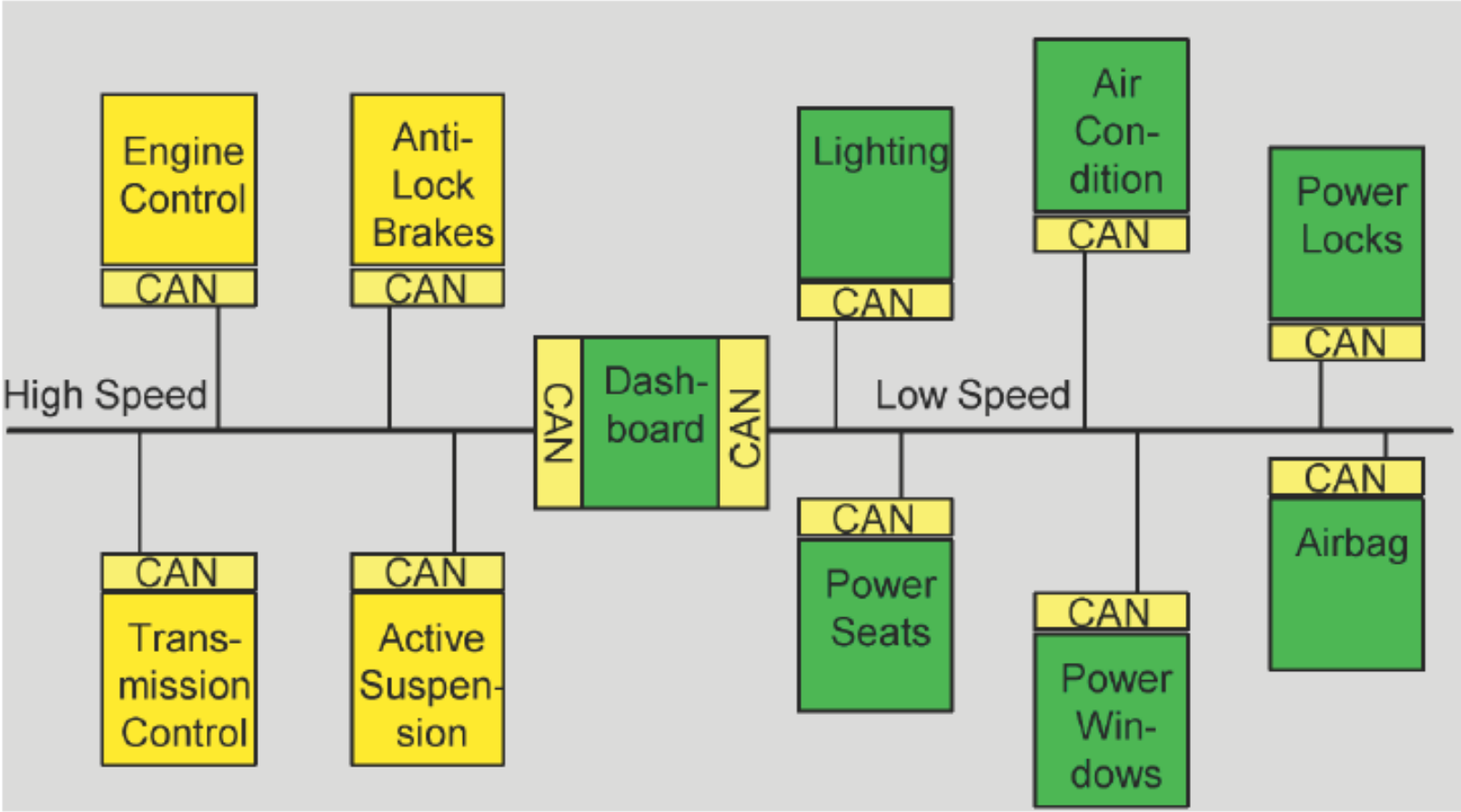
Engine Control
CAN
Anti-Lock Brakes
CAN
Lighting
CAN
Air Con-dition
CAN
Power Locks
CAN
High Speed
CAN
Dash-board
CAN
Low Speed
CAN
Trans-mission Control
CAN
Active Suspen-sion
CAN
Power Seats
CAN
Power Win-dows
CAN
Airbag

What is a sensor? An actuator?

- A sensor is a device that measures a physical quantity
- → Input / "Read from physical world"

- An actuator is a device that modifies a physical quantity
- → Output / "Write to physical world"

The Bridge between the Cyber and the Physical

- Sensors:
  - Cameras
  - Accelerometers
  - Gyroscopes
  - Strain gauges
  - Microphones
  - Magnetometers
  - Radar/Lidar
  - Chemical sensors
  - Pressure sensors
  - Switches
- Actuators:
  - Motor controllers
  - Solenoids
  - LEDs, lasers
  - LCD and plasma displays
  - Loudspeakers
  - Switches
  - Valves
- Modeling Issues:
  - Physical dynamics, Noise, Bias, Sampling, Interactions, Faults

Analog-to-Digital Converter (ADC)

- ADC is important almost to all application fields
- Converts a continuous-time voltage signal within a given range to discrete-time digital values to quantify the voltage's amplitudes

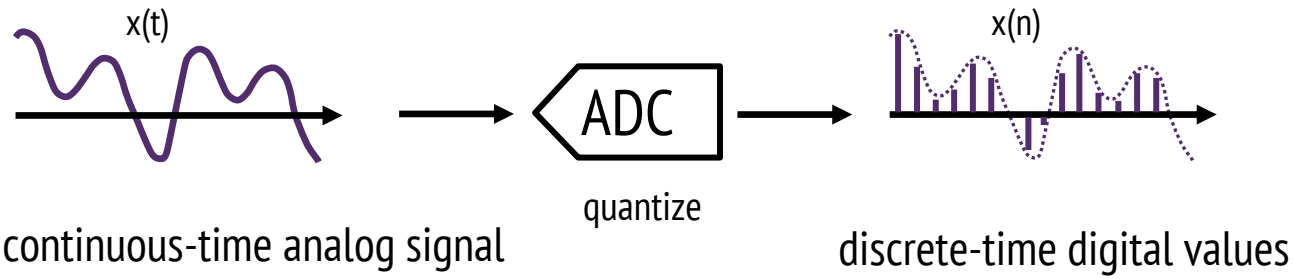

Analog-to-Digital Converter (ADC)

- Three performance parameters:
  - sampling rate – number of conversions per unit time
  - Resolution – number of bits an ADC output
  - power dissipation – power efficiency
- Many ADC implementations:
  - sigma-delta (low sampling rate, high resolution)
  - successive-approximation (low power data acquisition)
  - Pipeline (high speed applications)

Resolution

- Resolution is determined by number of bits (in binary) to represent an analog input.
- Example of two quantization methods (N = 3)

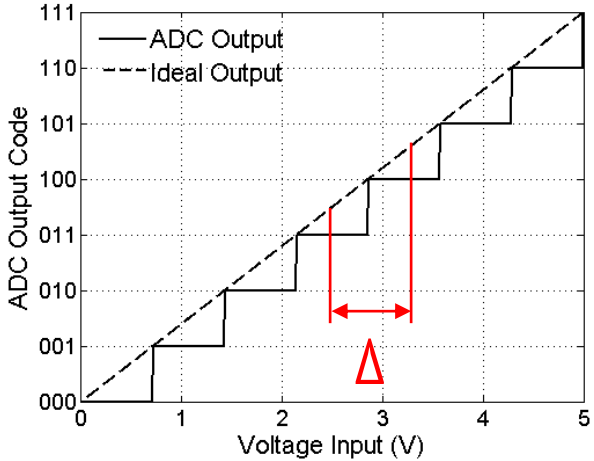

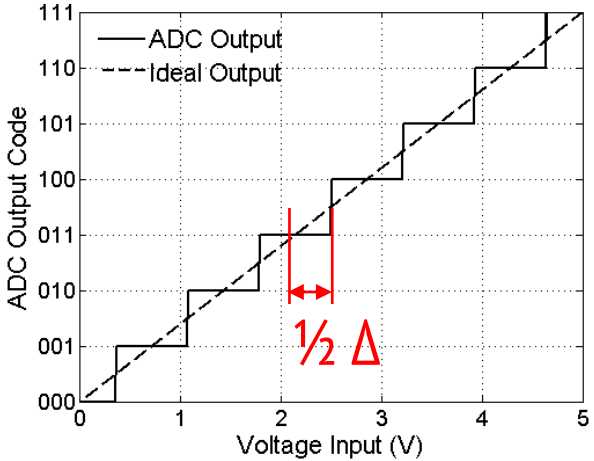

$$\text{Digital Result} = \text{floor}\left(2^3 \times \frac{V}{V_{REF}}\right)$$

Max quantization error = $\Delta = V_{REF}/2^3$

$$\text{Digital Result} = \text{round}\left(2^3 \times \frac{V}{V_{REF}}\right)$$

Max quantization error = $\pm ½\,\Delta = \pm V_{REF}/2^4$

$$\text{round}(x) = \text{floor}(x + 0.5)$$

Quantization Error

- For N-bit ADC, it is limited to ±½Δ
- Δ = is the step size of the converter.

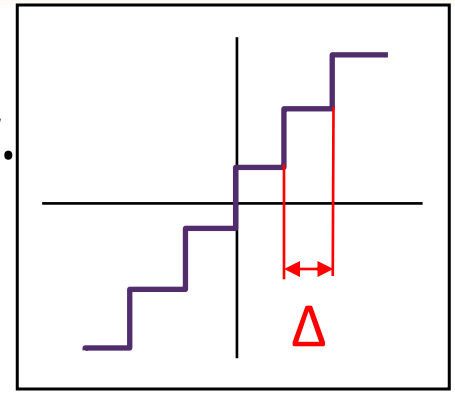

- Example: for 12-bit ADC and input voltage range [0, 3V]

$$Max\ Quantization\ Error = \frac{1}{2}\Delta = \frac{3V}{2\times 2^{12}} = 0.367mV$$

- How to reduce error?

Aliasing

- Example 1:
  - Consider a sinusoidal sound signal at 1 kHz : $x(t) = \cos(2000\pi t)$
  - Sampling interval T = 1/8000
  - Samples $s(n) = f\big(x(nT)\big) = \cos(\pi n/4)$
- Example 2:
  - Consider a sinusoidal sound signal at 9 kHz : $x'(t) = \cos(18000\pi t)$
  - Sampling interval T = 1/8000
  - Samples $s'^{(n)} = f\big(x(nT)\big) = \cos\left(\frac{9\pi n}{4}\right) = \cos\left(\frac{\pi n}{4} + 2\pi n\right) = \cos\left(\frac{\pi n}{4}\right) = s(n)$
- There are many distinct functions x that when sampled will yield the same signal s.

Minimum Sampling Rate

- In order to be able to reconstruct the analog input signal, the sampling rate should be at least twice the maximum frequency component contained in the input signal
- Example of two sine waves have the same sampling values. This is called aliasing.

Nyquist–Shannon Sampling Theorem

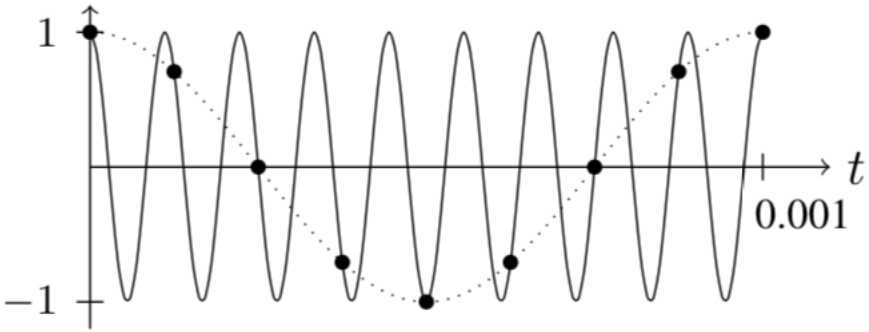

- Antialiasing
  - Pre-filtering: use analog hardware to filtering out high-frequency components and only sampling the low-frequency components. The high-frequency components are ignored.
  - Post-filtering: Oversample continuous signal, then use software to filter out high-frequency components

Digital-to-analog converter (DAC)

- Converts digital data into a voltage signal by a N-bit DAC

$$DAC_{output} = V_{ref} \times \frac{Digital\ Value}{2^N}$$

- For 12-bit DAC

$$DAC_{output} = V_{ref} \times \frac{Digital\ Value}{4096}$$

- Many applications:
  - digital audio
  - waveform generation
- Performance parameters
  - speed
  - resolution
  - power dissipation
  - glitches

DAC Implementations

- Pulse-width modulator (PWM)
- Binary-weighted resistor (We will use this one as an example)
- R-2R ladder (A special case of binary-weighted resistor)

Pulse-Width Modulation (PWM)

- Delivering power to actuators can be challenging. If the device tolerates rapid on-off controls ("bang-bang" control), then delivering power becomes much easier.

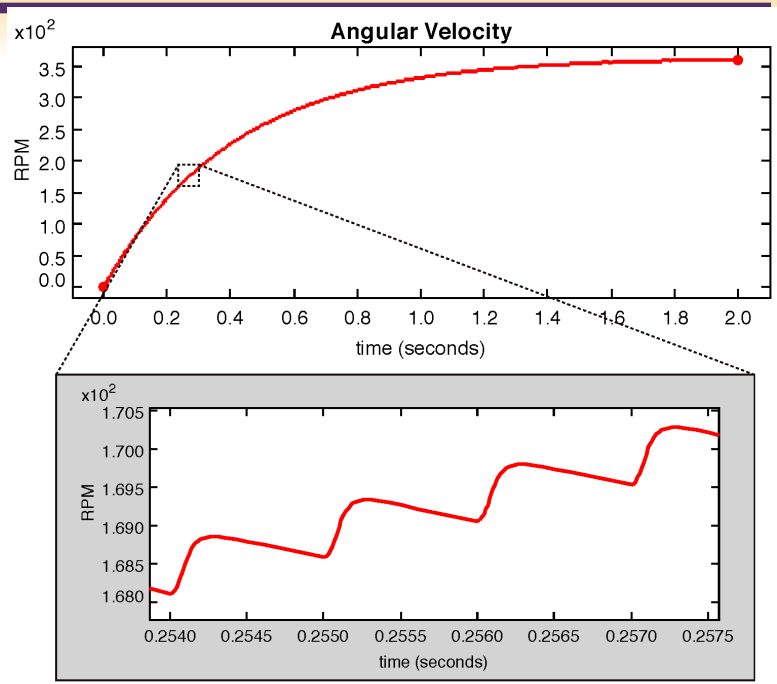

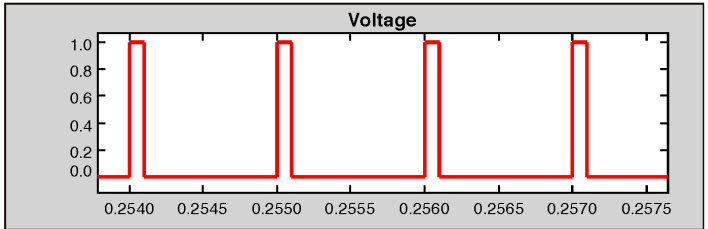

Duty cycle around 10%

Design Issues with Sensors

- Calibration
  - Relating measurements to the physical phenomenon
  - Can dramatically increase manufacturing costs
- Nonlinearity
  - Measurements may not be proportional to physical phenomenon
  - Correction may be required
  - Feedback can be used to keep operating point in the linear region
- Sampling
  - Aliasing
  - Missed events
- Noise
  - Analog signal conditioning
  - Digital filtering
  - Introduces latency
- Failures
  - Redundancy (sensor fusion problem)
  - Attacks (e.g. Stuxnet attack)

Violent Pitching of Qantas Flight 72 (VH-QPA)

- An Airbus A330 en-route from Singapore to Perth on 7 October 2008
- Started pitching violently, unrestrained passengers hit the ceiling, 12 serious injuries, so counts it as an accident.
- Three Angle Of Attack (AOA) sensors, one on left (#1), two on right (#2, #3) of nose.
- Have to deal with inaccuracies, different positions, gusts/spikes, failures.

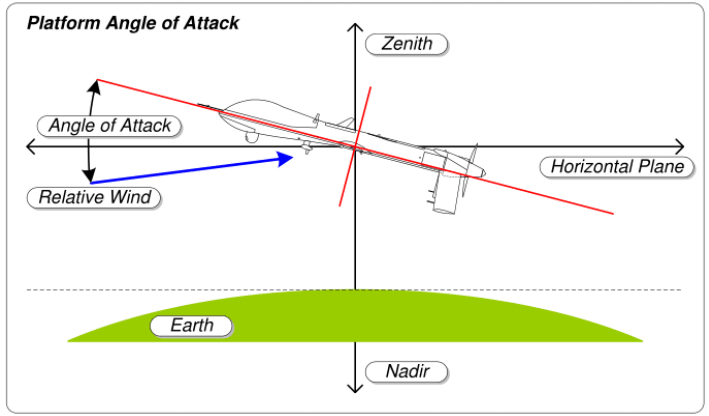

Faults in Sensors

- Sensors are physical devices
- Like all physical devices, they suffer wear and tear, and can have manufacturing defects
- Cannot assume that *all* sensors on a system will work correctly at *all* times
- Solution: Use redundancy
- → However, must be careful *how* you use it!

How to deal with Sensor Errors

- Difficult Problem, still research to be done

- Possible approach: Intelligent sensor communicates an interval, not a point value
  - Width of interval indicates confidence, health of sensor

Sensor Fusion: Marzullo's Algorithm

- Axiom: if sensor is non-faulty, its interval contains the true value
- Observation: true value must be in overlap of non-faulty intervals
- Consensus (fused) Interval to tolerate f faults in n: Choose interval that contains all overlaps of n – f; i.e., from least value contained in n – f intervals to largest value contained in n – f

Example: Four sensors, at most one faulty

- Interval reports range of possible values.
- Of S1 and S4, one must be faulty.
- Of S3 and S4, one must be faulty.
- Therefore, S4 is faulty.
- Sound estimate is the overlap of the remaining three.

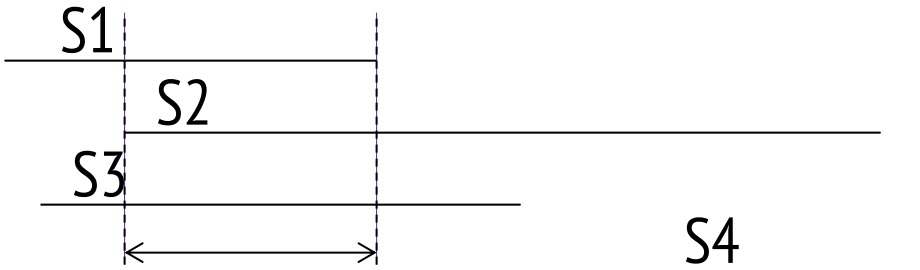

Probable value

Example: Four sensors, at most one faulty

- Suppose S4's reading moves to the left
- Which interval should we pick?

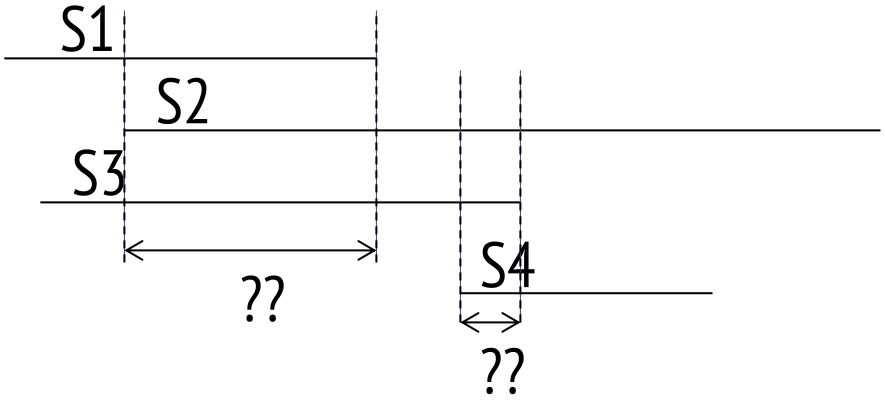

Example: Four sensors, at most one faulty

- Marzullo's algorithm picks the smallest interval that is sure to contain the true value, under the assumption that at most one sensor failed.
- But this yields big discontinuities. Jumps!

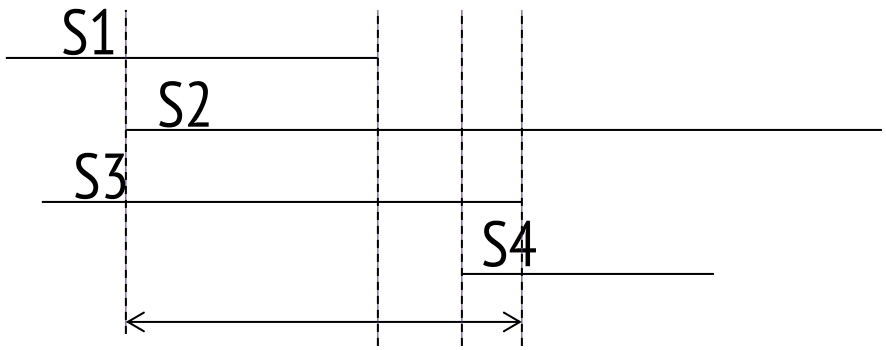

consensus

Schmid and Schossmaier's Fusion Method

- Recall: n sensors, at most f faulty
- Choose interval from f+1st largest lower bound to f+1st smallest upper bound
- Optimal among selections that satisfy continuity conditions.

Example: Four sensors, at most one faulty

- Assuming at most one faulty, Schmid and Schossmaier's method choose the interval between:
  - Second largest lower bound
  - Second smallest upper bound
  - This preserves continuity, but not soundness

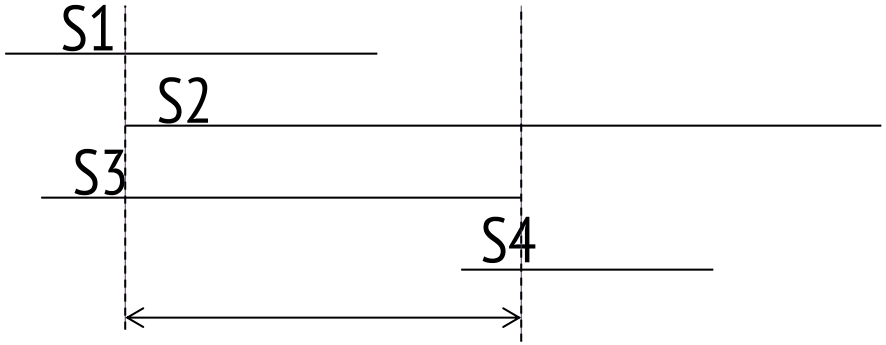

consensus

Algorithm

- sort the lower and upper bounds of all the sensor readings into ascending order → O(nlogn)
- scan the sorted list from smallest to largest, maintaining an intersection count
  - increments by one for every lower bound and decrements by one for every upper bound
- the lower bound l of the fusion interval is the first value where the count reaches n − f

http://infolab.stanford.edu/pub/cstr/reports/csl/tr/83/247/CSL-TR-83-247.pdf

Voting and Data Fusion

- Majority voting: Select the value that appears on at least $\lfloor n/2 \rfloor + 1$ of the n inputs
- Majority fusers can be realized by means of comparators and multiplexers

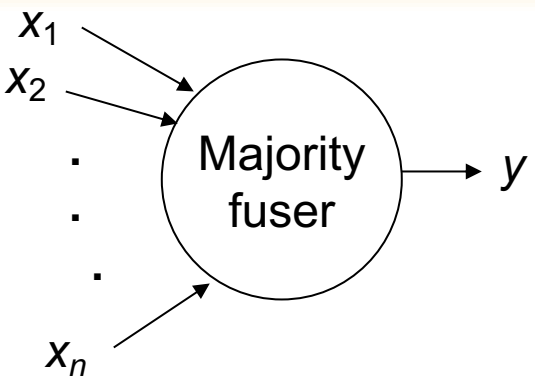

Weighted Voting

Given n input data objects $x_1, x_2, \ldots, x_n$ and associated nonnegative real weights $v_1, v_2, \ldots, v_n$, with $\mathrm{S}v_i = V$, compute output y and its weight w such that y is "supported by" a set of input objects with weights totaling w, where w satisfies a condition associated with the voting subscheme

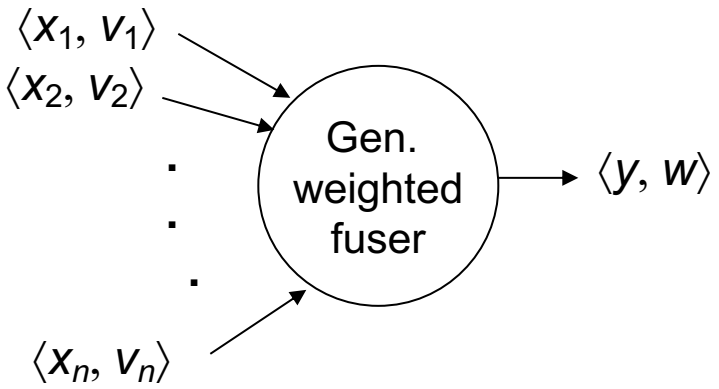

Possible voting subschemes:

Unanimity	$w = V$
Majority	$w > V/2$
Supermajority	$w \geq 2V/3$
Byzantine	$w > 2V/3$
Plurality	(w for y) $\geq$ (w for any $z \neq y$)
Threshold	$w >$ a preset lower bound