Drawing examples in LaTeX

Giuseppe Silano

April 11, 2020

Contents

Introduction **i**
The aim of document i

1 Block Diagram **1**
1.1 Example 1 1
1.2 Example 2 1
1.3 Example 3 2
1.4 Example 4 2
1.5 Example 5 3
1.6 Example 6 3
1.7 Example 7 3
1.8 Example 8 4
1.9 Example 9 4
1.10 Example 10 5
1.11 Example 11 5
1.12 Example 12 6
1.13 Example 13 6
1.14 Example 14 7
1.15 Example 15 7
1.16 Example 16 7
1.17 Example 17 8
1.18 Example 18 8
1.19 Example 19 9
1.20 Example 20 9
1.21 Example 21 10
1.22 Example 22 10
1.23 Example 23 11
1.24 Example 24 11
1.25 Example 25 12
1.26 Example 26 12
1.27 Example 27 13
1.28 Example 28 13
1.29 Example 29 14
1.30 Example 30 14
1.31 Example 31 15

1.32 Example 32 . . . 15
1.33 Example 33 . . . 16
1.34 Example 34 . . . 16
1.35 Example 35 . . . 17

2 Matlab Plots **18**
2.1 Example 1 . . . 18
2.2 Example 2 . . . 19
2.3 Example 3 . . . 19
2.4 Example 4 . . . 20

3 Drawing on Images **21**
3.1 Example 1 . . . 21
3.2 Example 2 . . . 22
3.3 Example 3 . . . 22
3.4 Example 4 . . . 23
3.5 Example 5 . . . 23
3.6 Example 6 . . . 24
3.7 Example 7 . . . 24
3.8 Example 8 . . . 25
3.9 Example 9 . . . 25
3.10 Example 10 . . . 26

4 Various **27**
4.1 Example 1 . . . 27
4.2 Example 2 . . . 27
4.3 Example 3 . . . 28
4.4 Example 4 . . . 28
4.5 Example 5 . . . 29
4.6 Example 6 . . . 29
4.7 Example 7 . . . 29
4.8 Example 8 . . . 30
4.9 Example 9 . . . 30
4.10 Example 10 . . . 31
4.11 Example 11 . . . 31
4.12 Example 12 . . . 31
4.13 Example 13 . . . 32
4.14 Example 14 . . . 32
4.15 Example 15 . . . 33
4.16 Example 16 . . . 33
4.17 Example 17 . . . 33
4.18 Example 18 . . . 34
4.19 Example 19 . . . 34
4.20 Example 20 . . . 35
4.21 Example 21 . . . 35
4.22 Example 22 . . . 36

4.23 Example 23 36
4.24 Example 24 37
4.25 Example 25 37
4.26 Example 26 38
4.27 Example 27 38
4.28 Example 28 39
4.29 Example 29 39
4.30 Example 30 39
4.31 Example 36 39

Introduction

The aim of document

The aim of this file is to help people interested in learning how to use LaTeX for drawing. In particular, already structured examples will help to develop one's own through the source code provided. The draws have been made during my research activity as PhD candidate.

The file is divided into four main chapters (parts):

- *Block Diagrams* (see Ch. 1): this part contains block diagrams;
- *Matlab Plots* (see Ch. 2): this part contains MATLAB® and the MATLAB package *matlab2tikz*[1].
- *Drawing on Images* (see Ch. 3): this part contains draws made on image files;
- *Various* (see Ch. 4): this part contains several drawings that do not belong to the sections listed above.

[1] It is available at the link `https://github.com/matlab2tikz/matlab2tikz`

Chapter 1

Block Diagram

1.1 Example 1

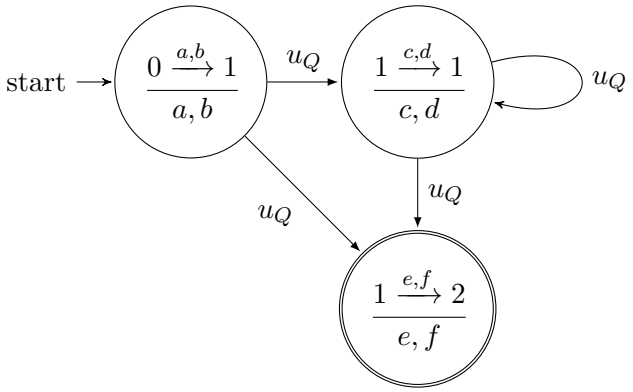

1.2 Example 2

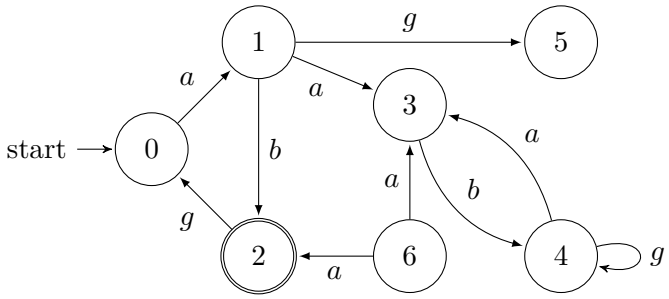

1.3 Example 3

Continuos-time:

$$\begin{aligned} \dot{x}(t) &= Ax(t) + Bu(t) \\ y(t) &= Cx(t) \end{aligned}$$

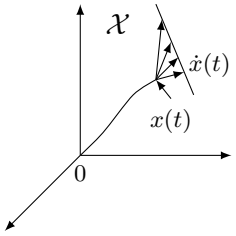

Discrete-time:

$$\begin{aligned} x(k+1) &= Ax(k) + Bu(k) \\ y(k) &= Cx(k) \end{aligned}$$

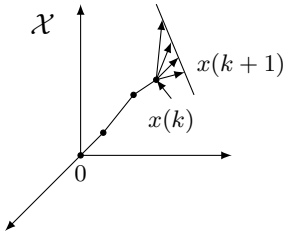

1.4 Example 4

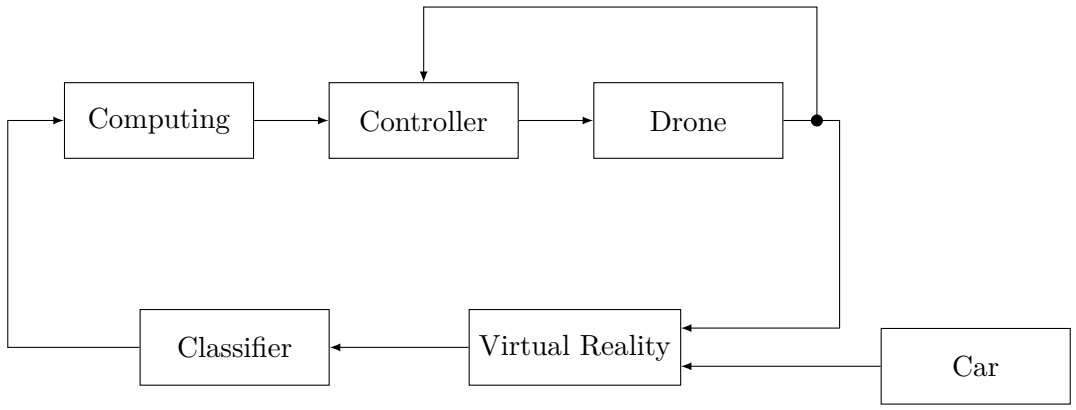

1.5 Example 5

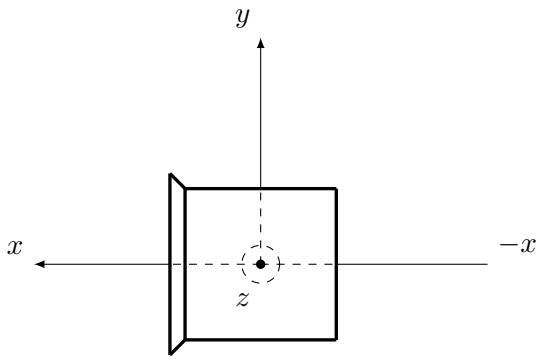

1.6 Example 6

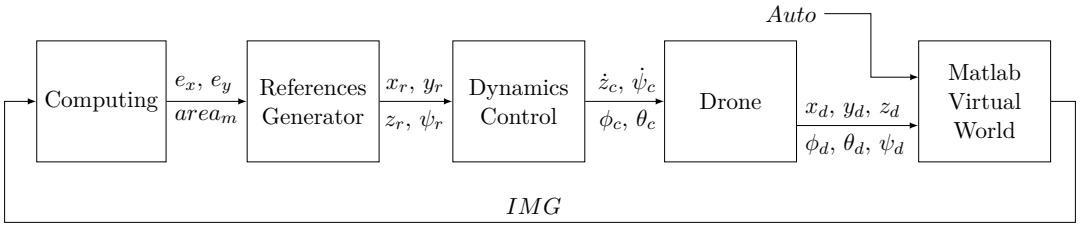

1.7 Example 7

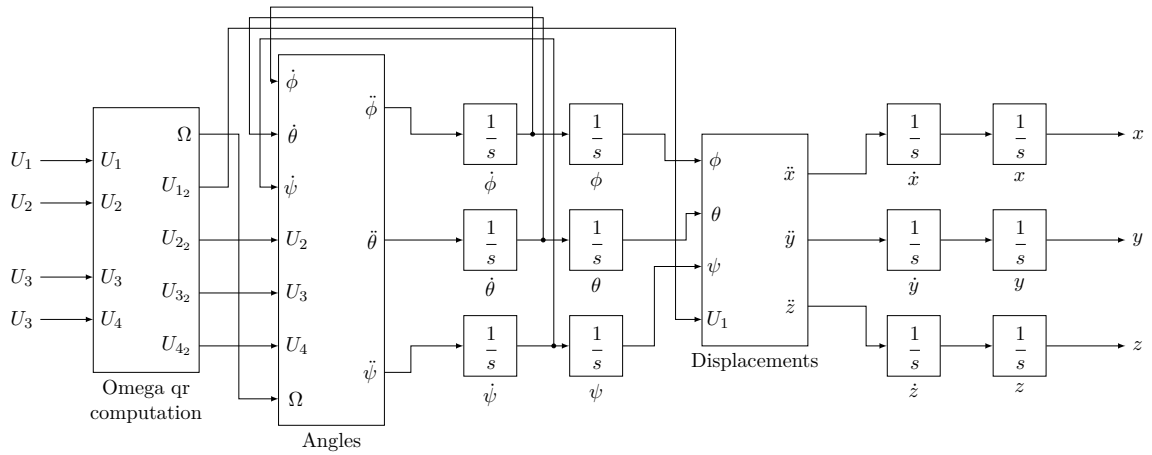

1.8 Example 8

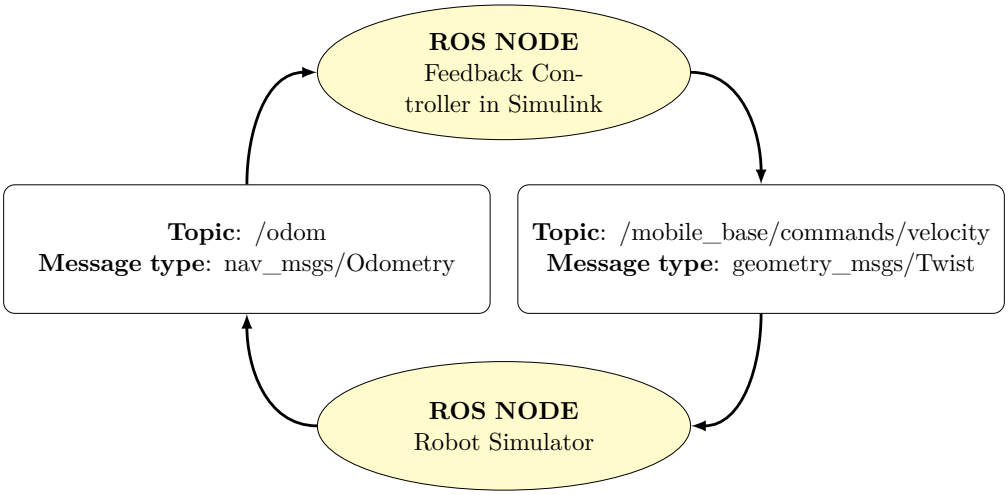

1.9 Example 9

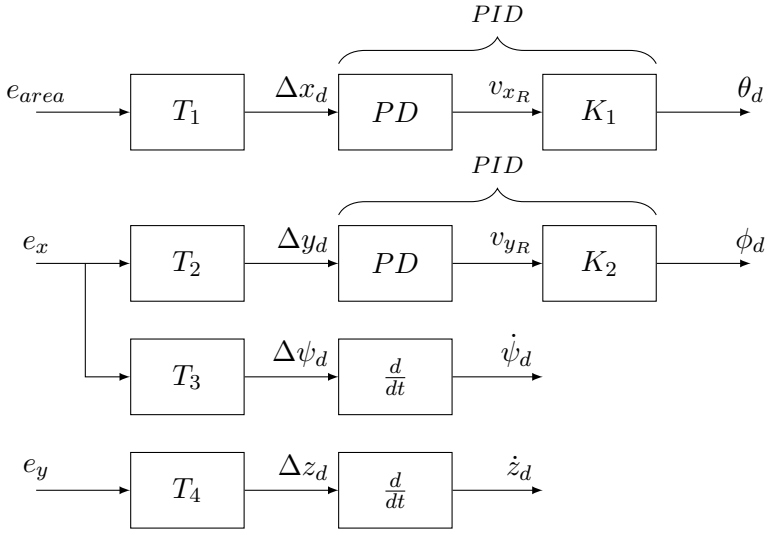

1.10 Example 10

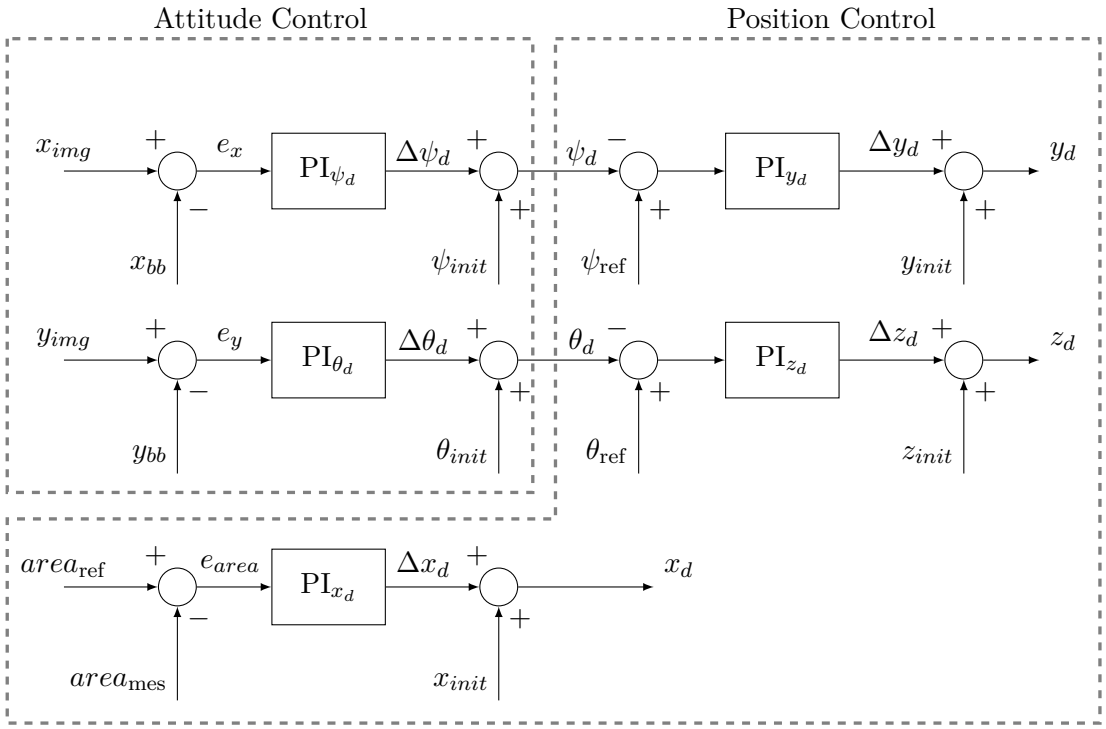

1.11 Example 11

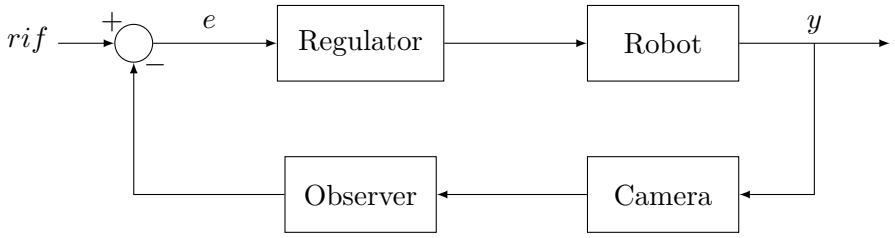

1.12 Example 12

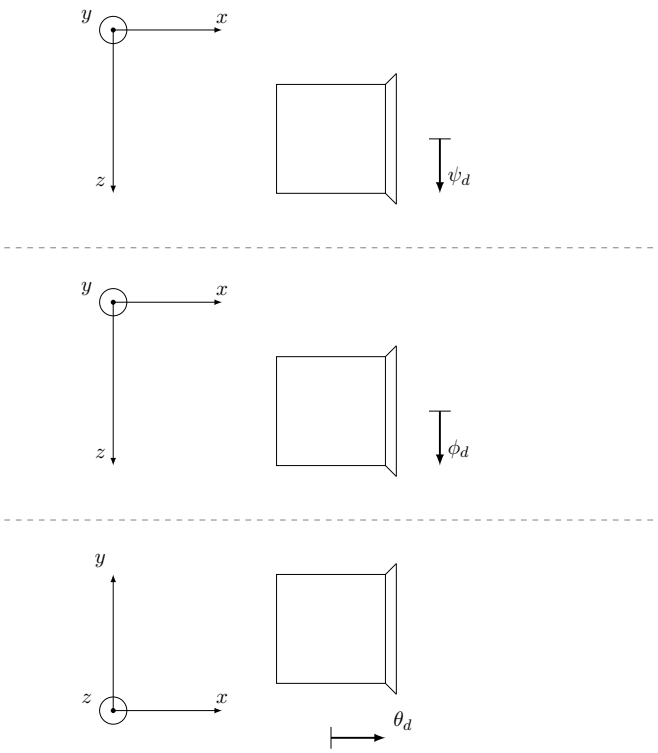

1.13 Example 13

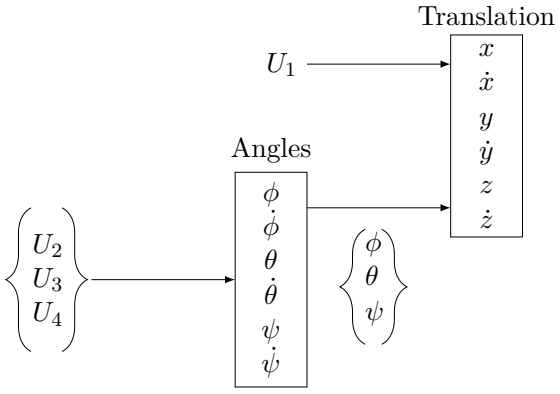

1.14 Example 14

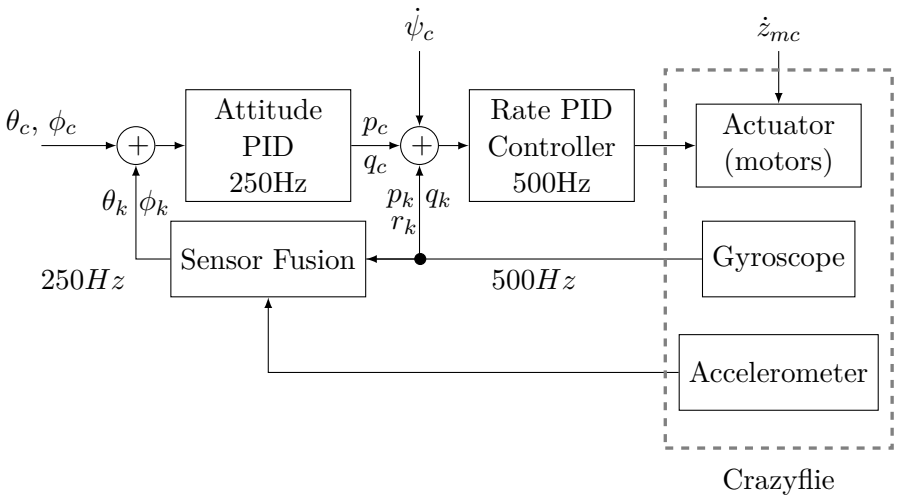

1.15 Example 15

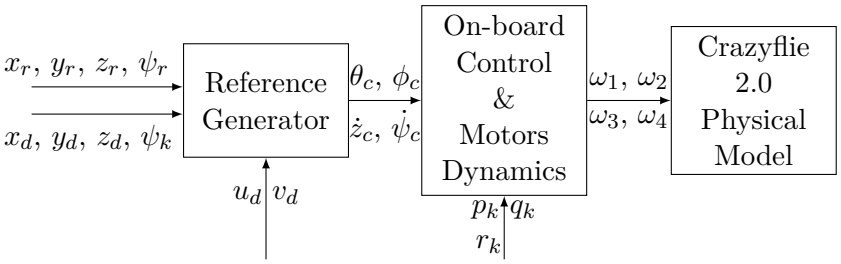

1.16 Example 16

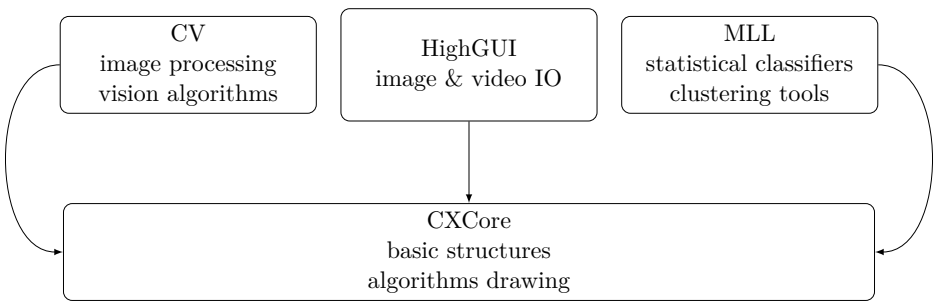

1.17 Example 17

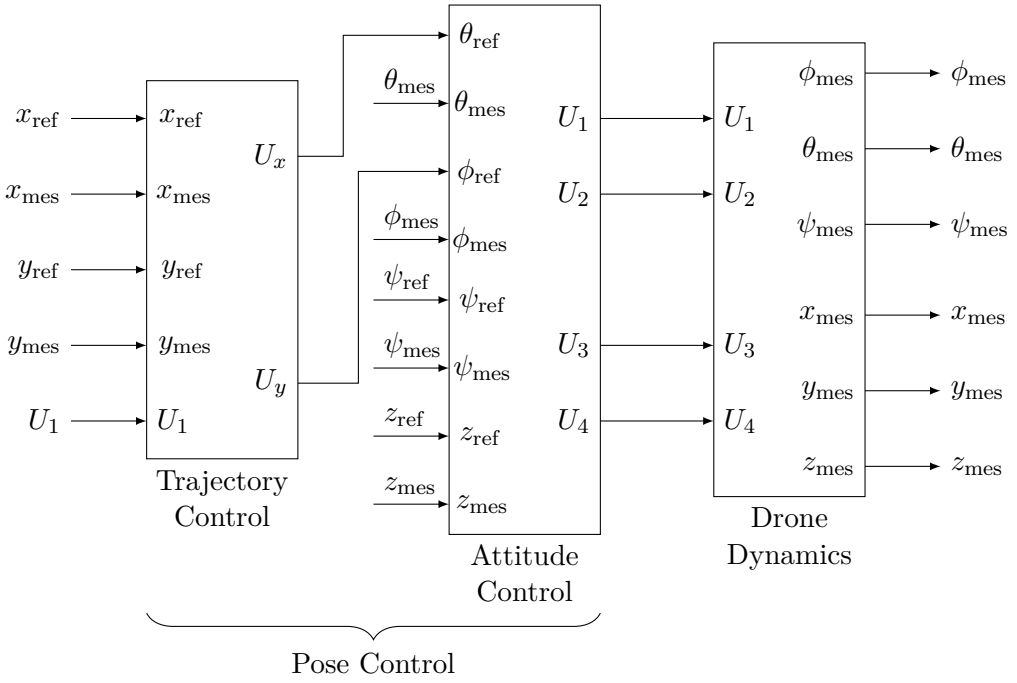

1.18 Example 18

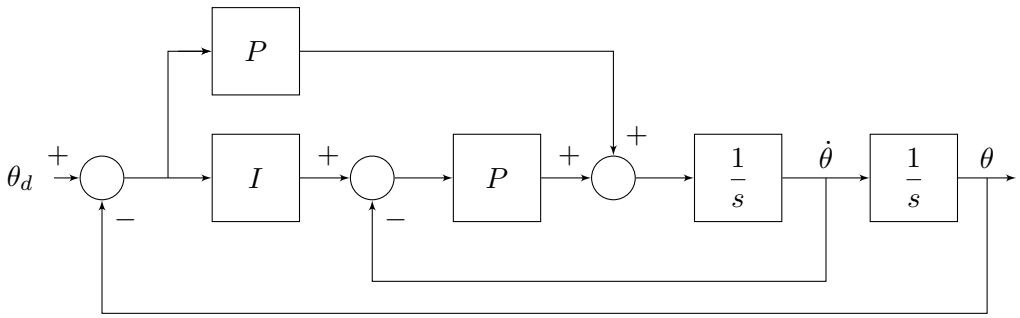

1.19 Example 19

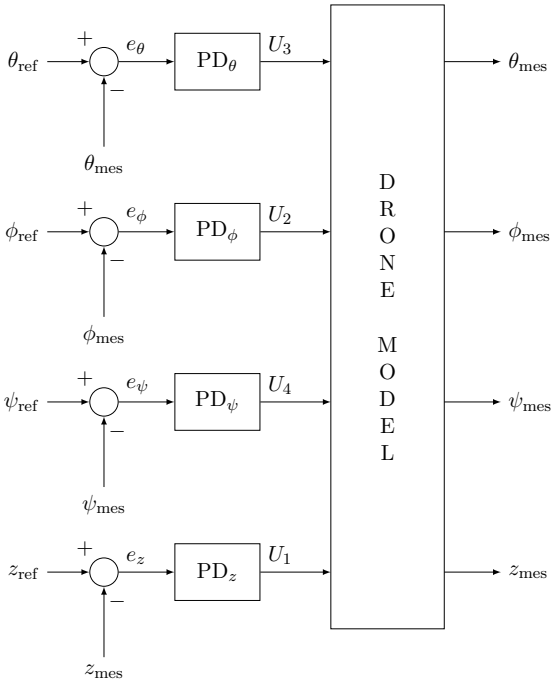

1.20 Example 20

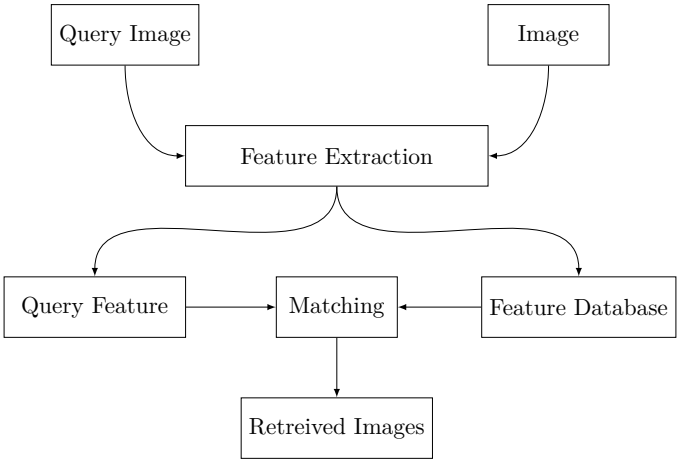

1.21 Example 21

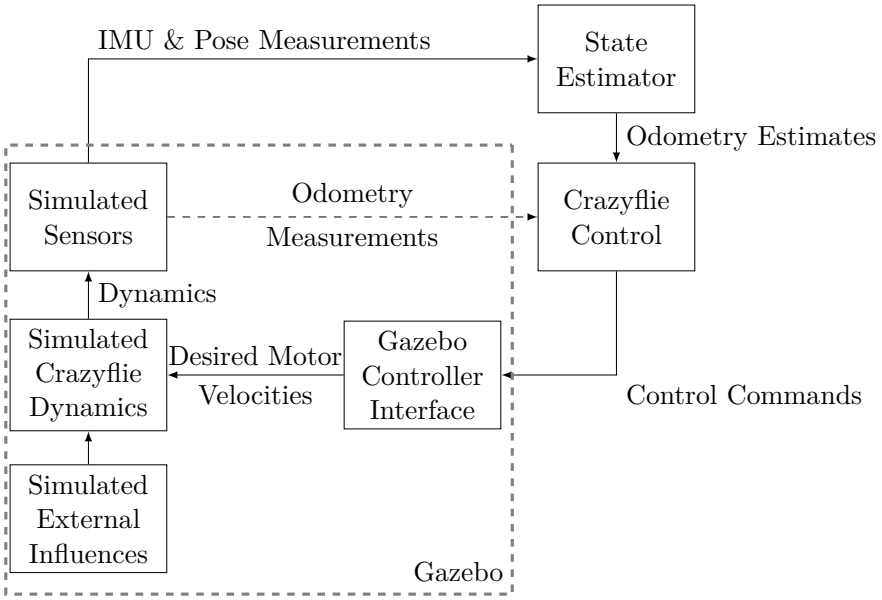

1.22 Example 22

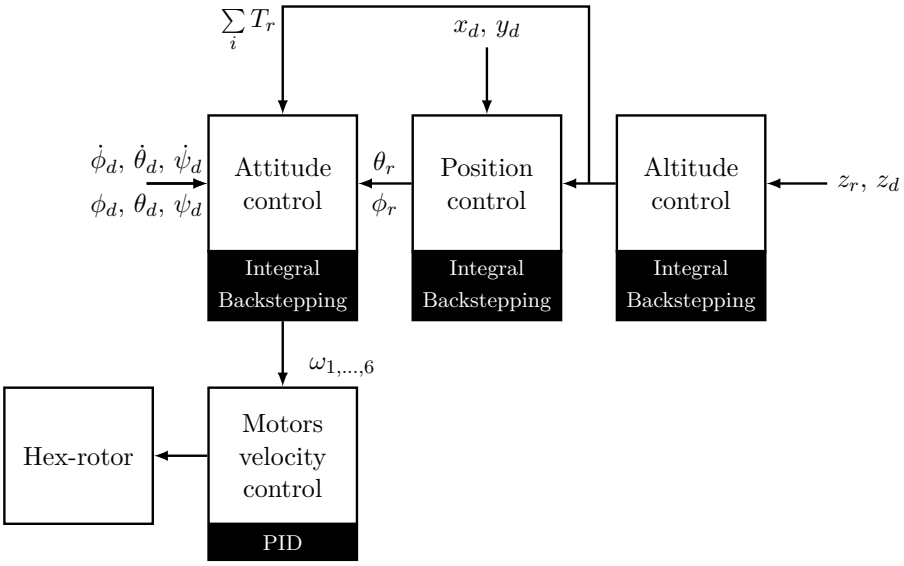

1.23 Example 23

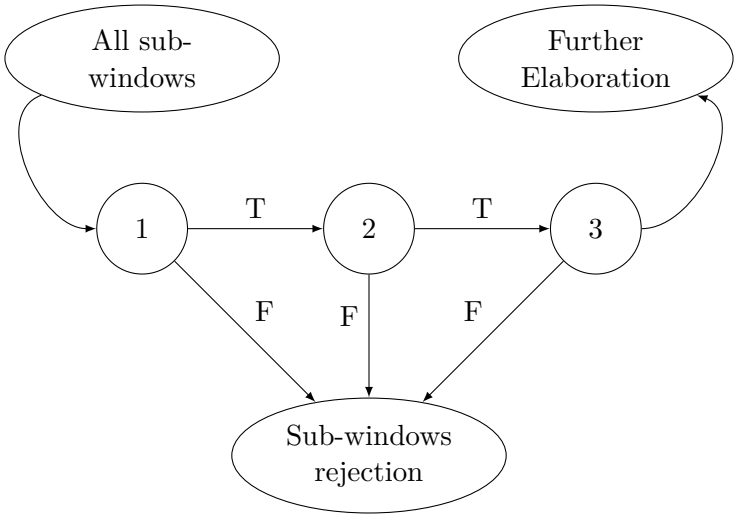

1.24 Example 24

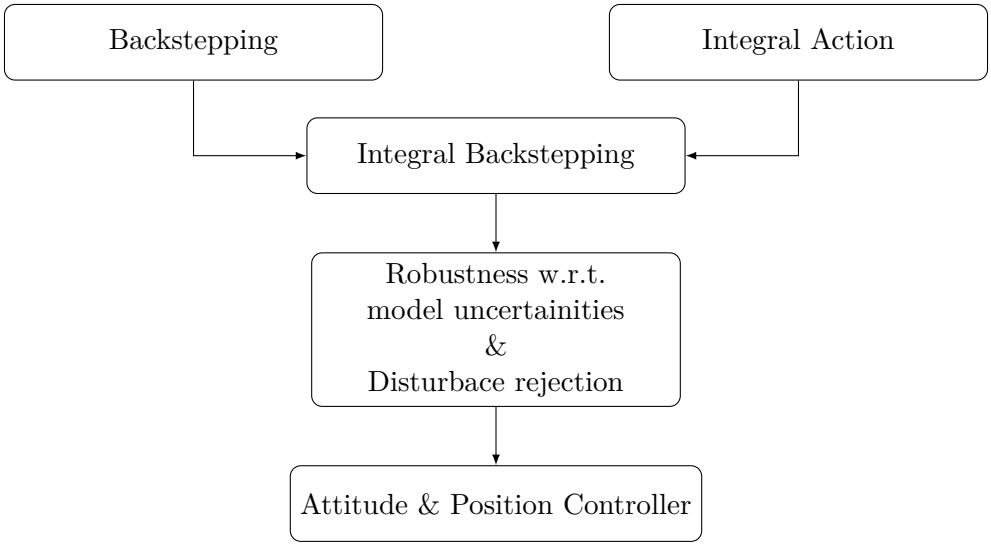

1.25 Example 25

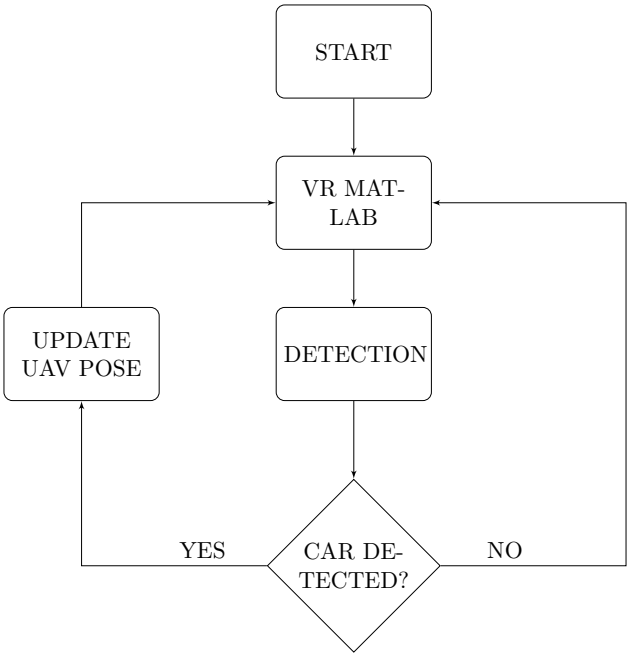

1.26 Example 26

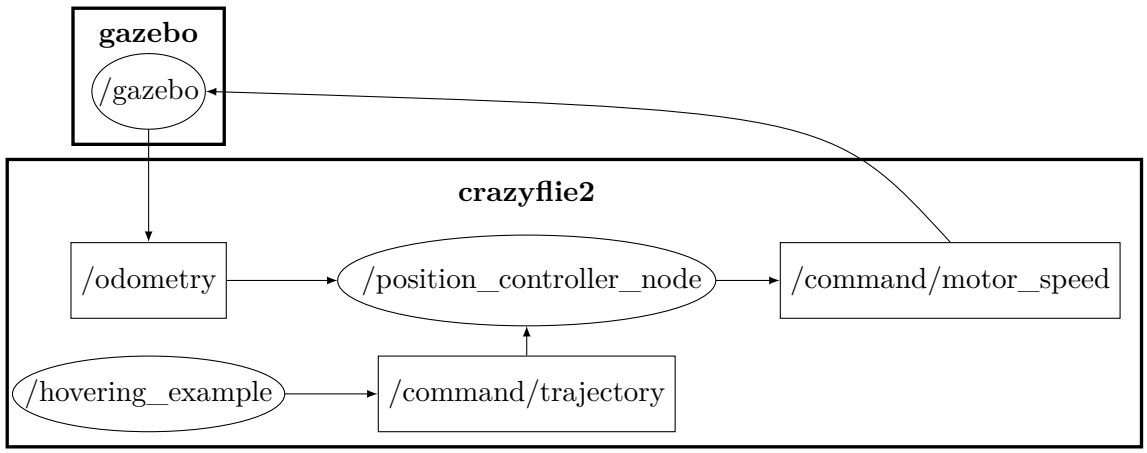

1.27 Example 27

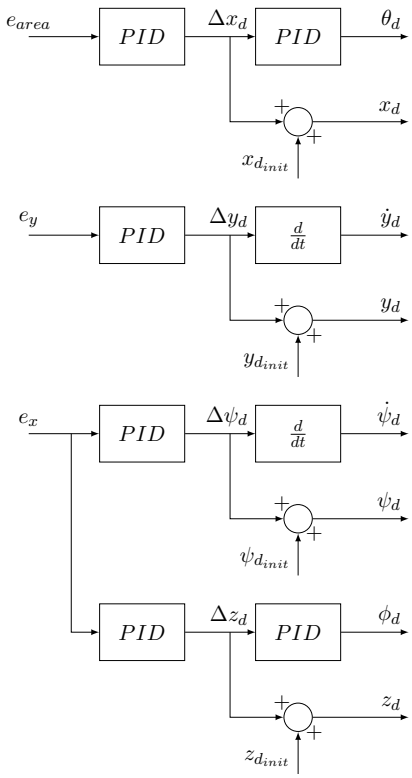

1.28 Example 28

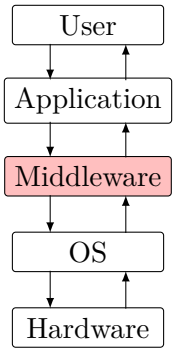

1.29 Example 29

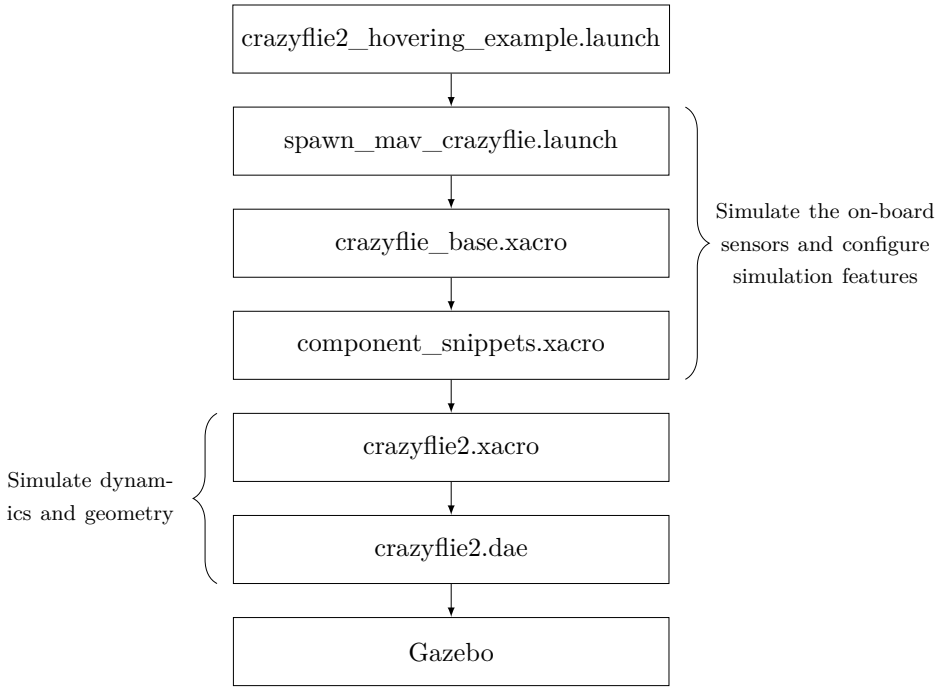

1.30 Example 30

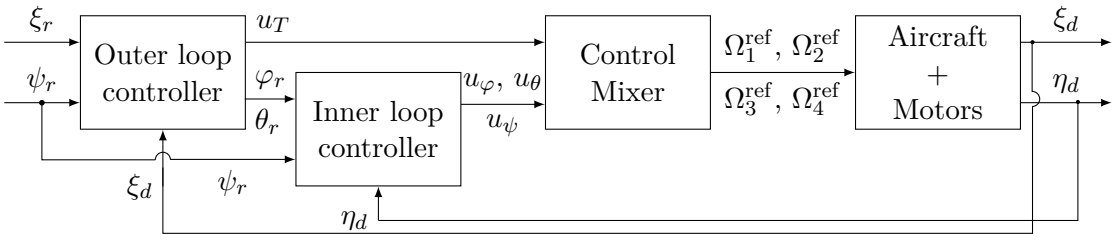

1.31 Example 31

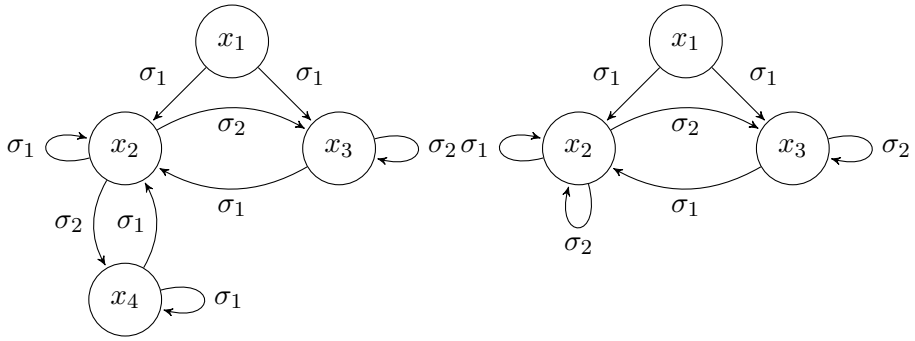

1.32 Example 32

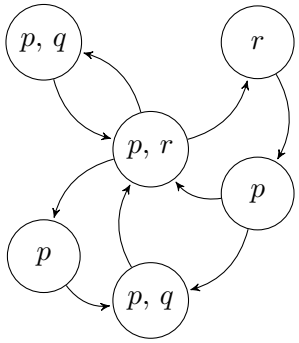

1.33 Example 33

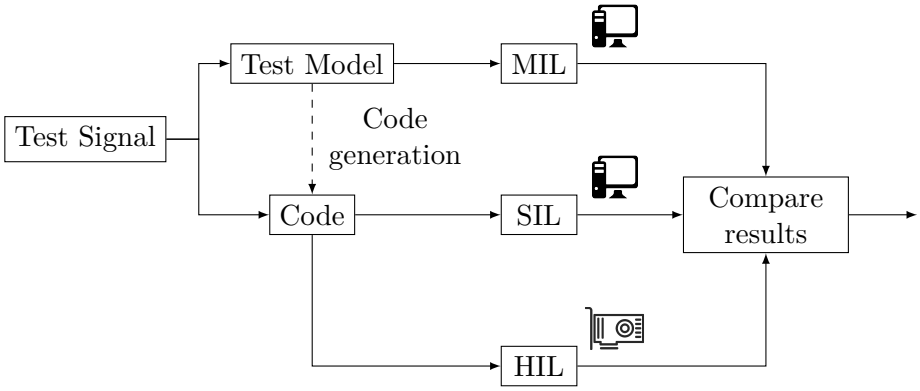

1.34 Example 34

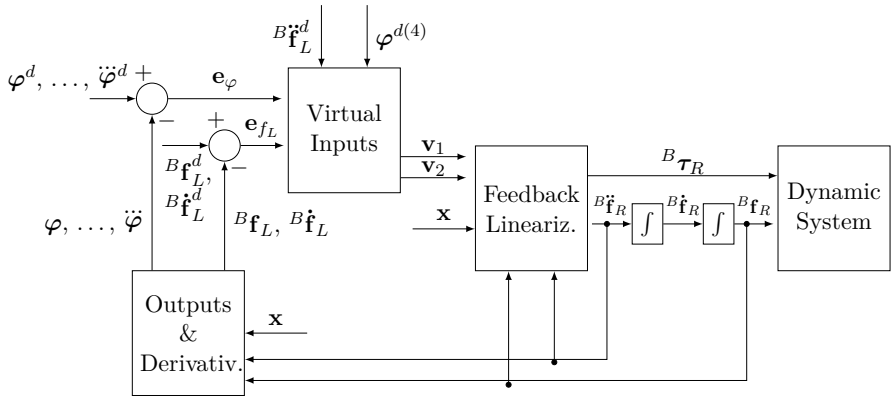

1.35 Example 35

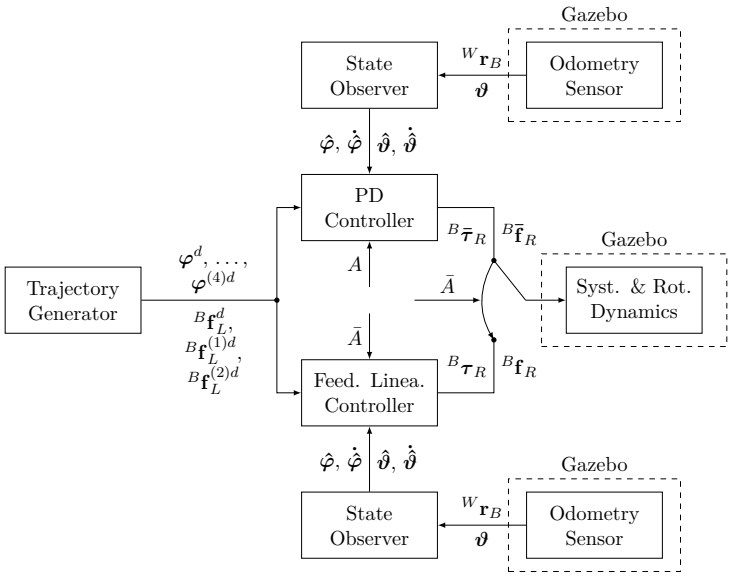

Chapter 2

Matlab Plots

2.1 Example 1

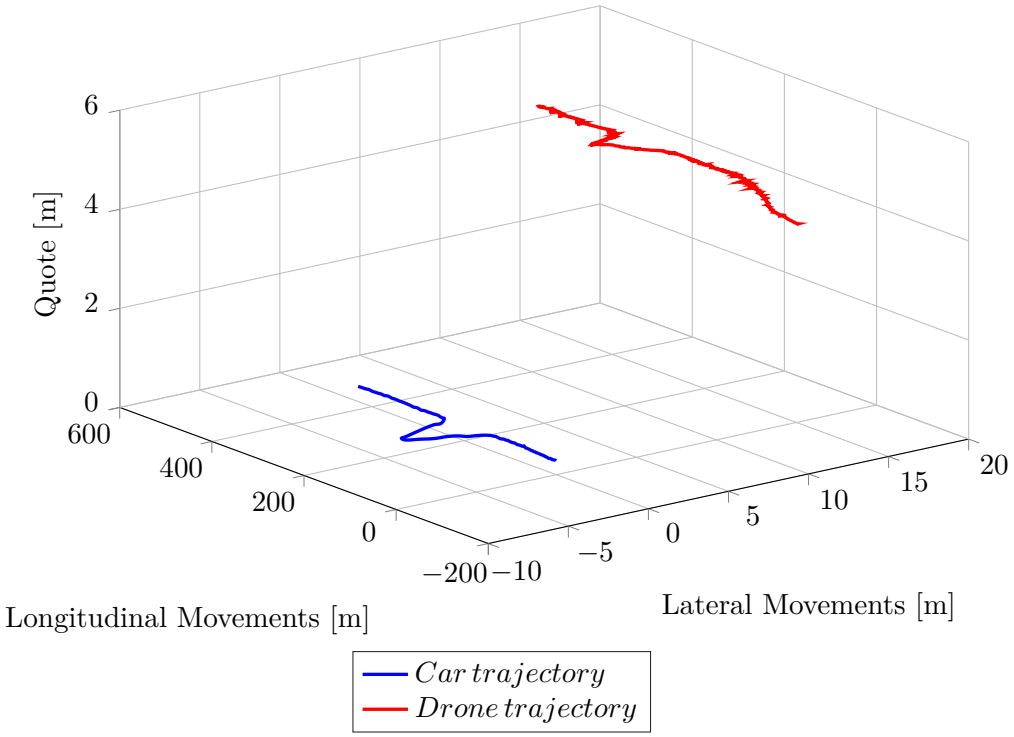

2.2 Example 2

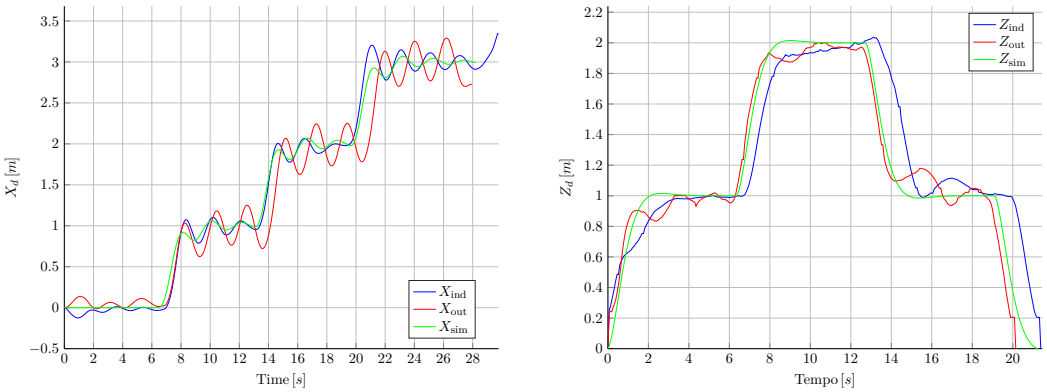

(a) (b)

2.3 Example 3

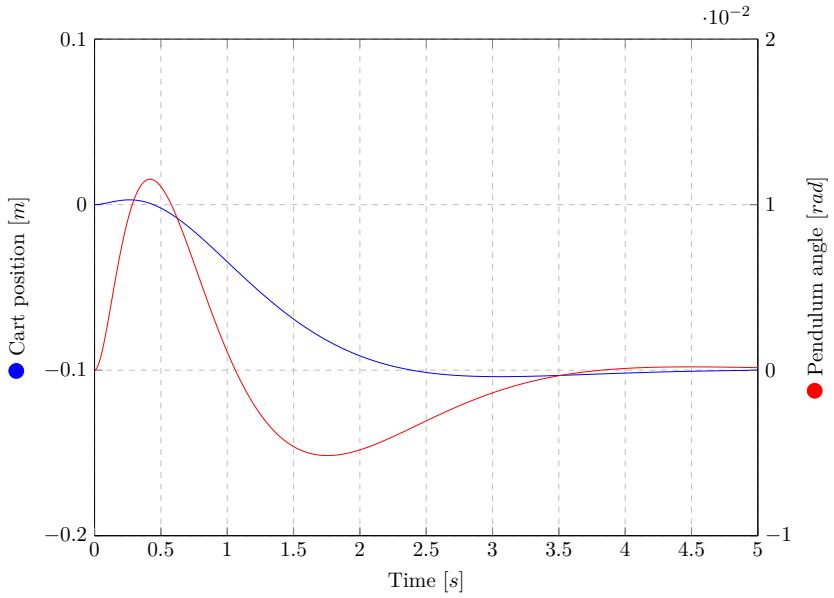

2.4 Example 4

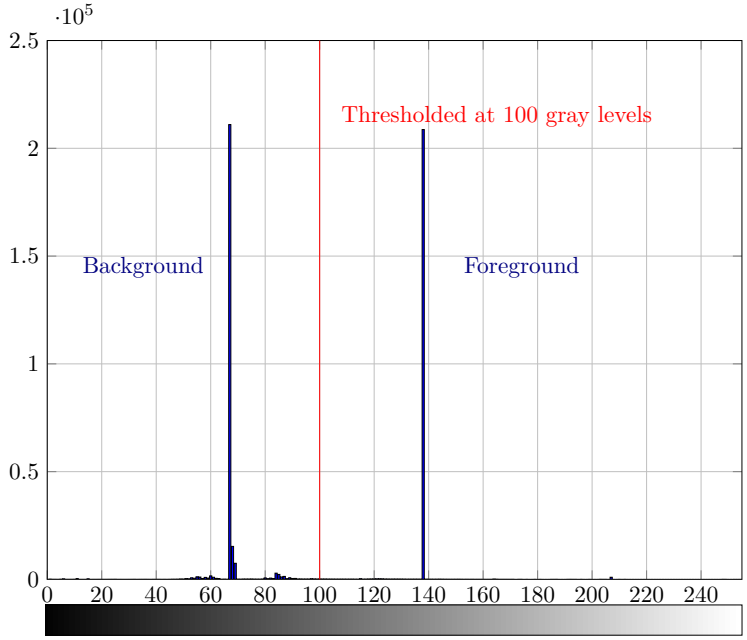
$\cdot 10^5$
2.5
2
1.5
1
0.5
0
Thresholded at 100 gray levels
Background
Foreground
0 20 40 60 80 100 120 140 160 180 200 220 240

Chapter 3

Drawing on Images

3.1 Example 1

Haar cascade

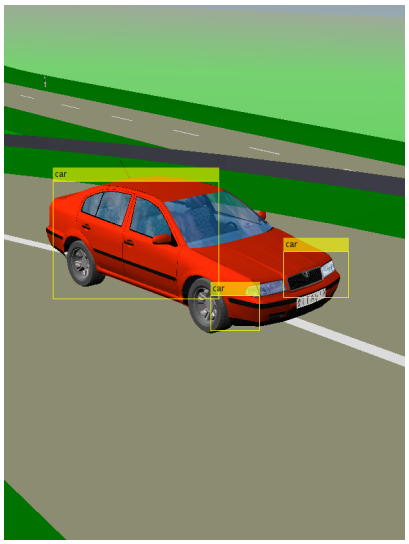

HOG

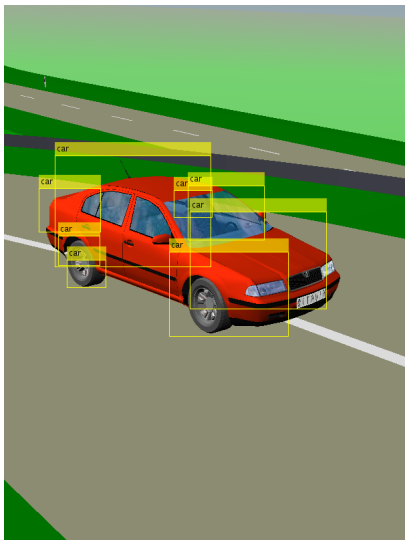

3.2 Example 2

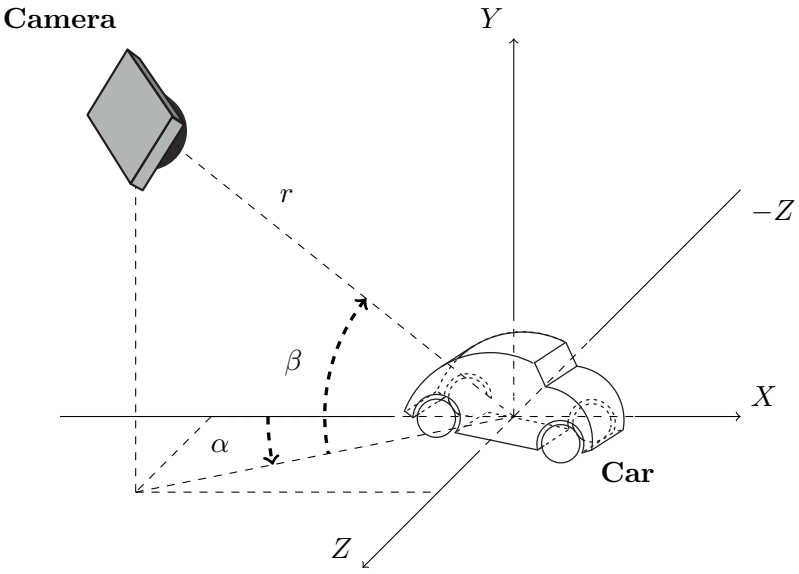

3.3 Example 3

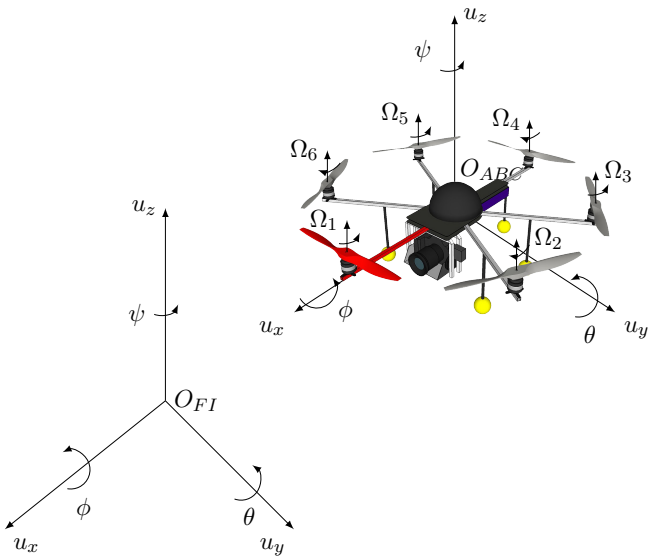

3.4 Example 4

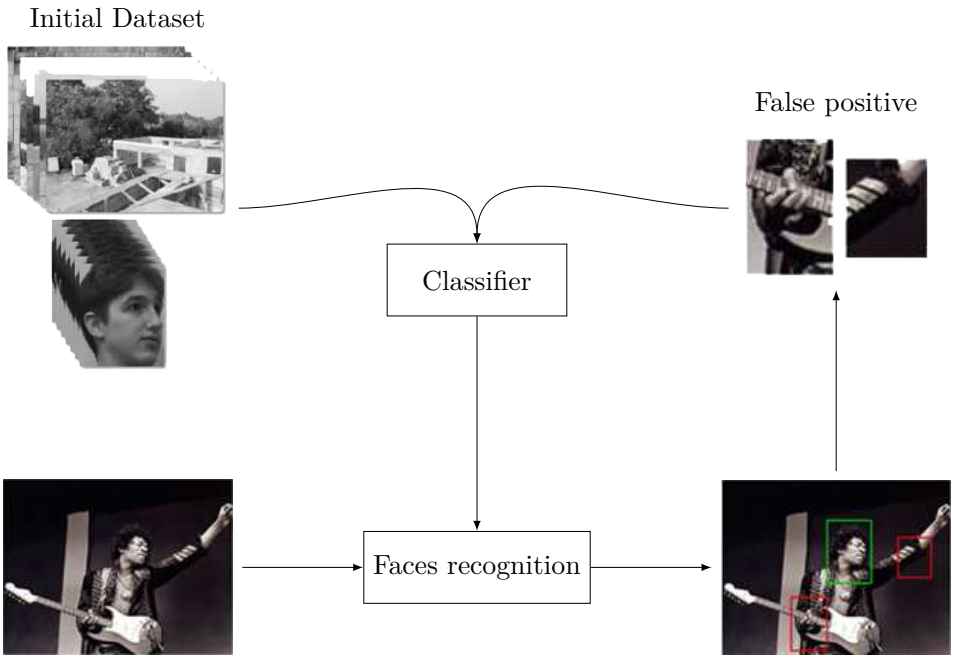

3.5 Example 5

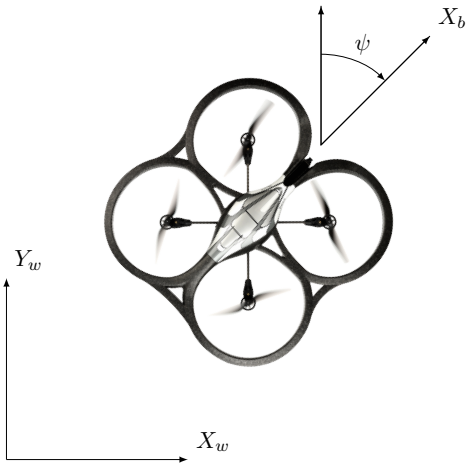

3.6 Example 6

3.7 Example 7

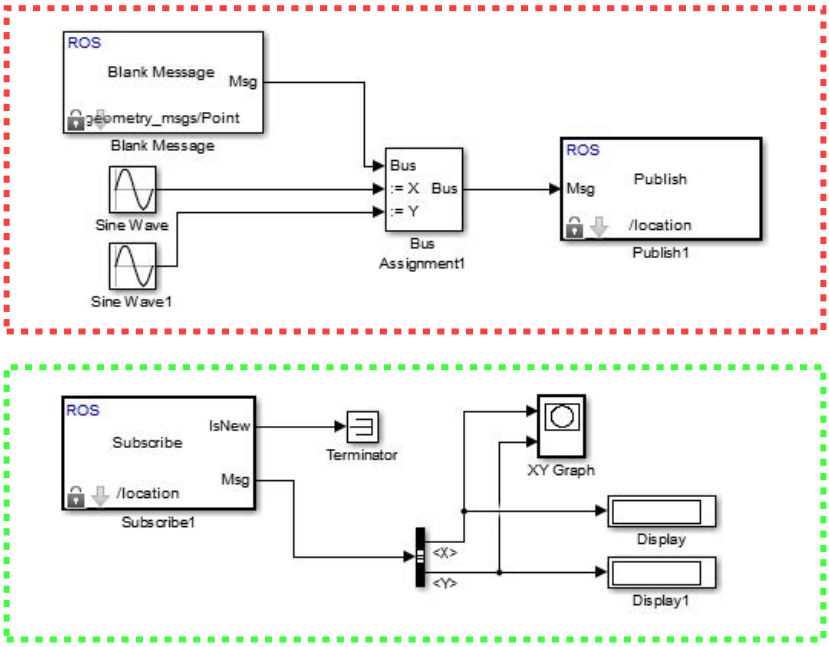

3.8 Example 8

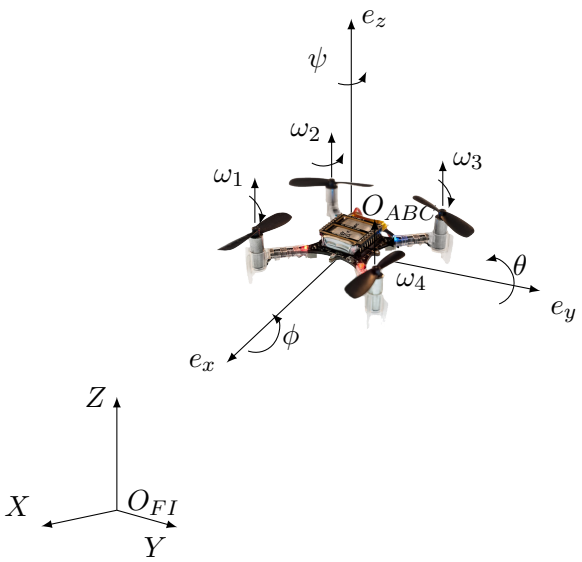

3.9 Example 9

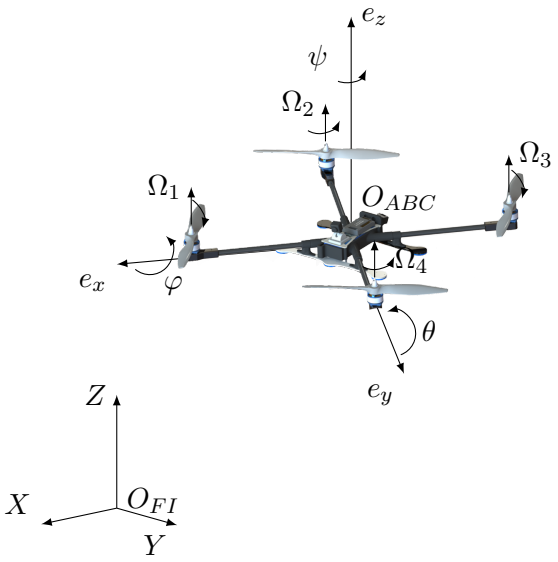

3.10 Example 10

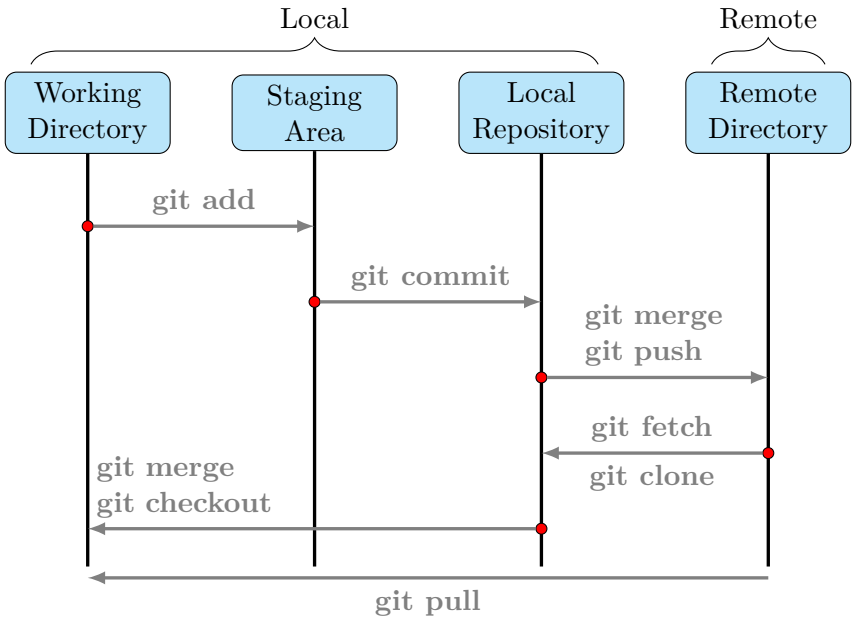

Chapter 4

Various

4.1 Example 1

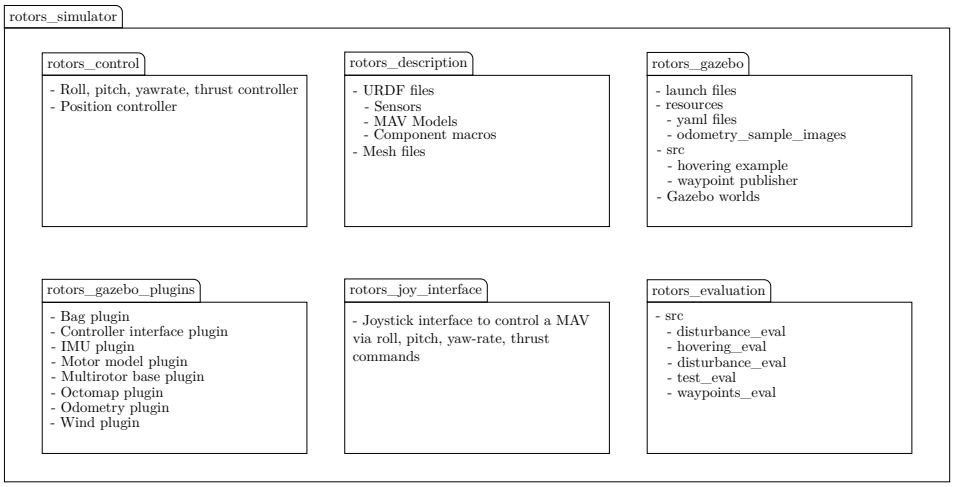

4.2 Example 2

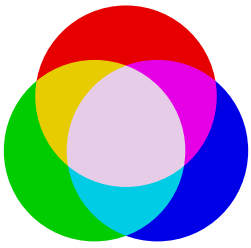

4.3 Example 3

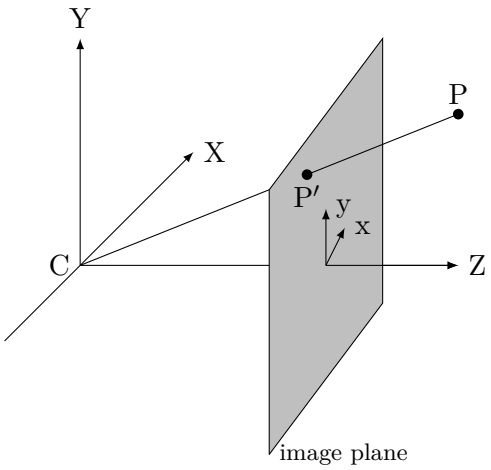

4.4 Example 4

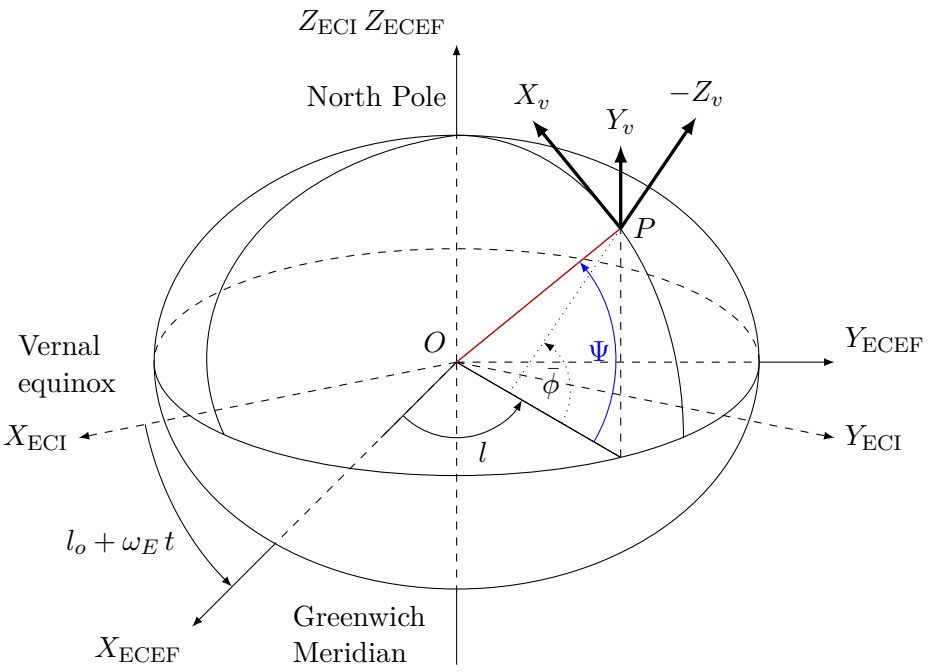

4.5 Example 5

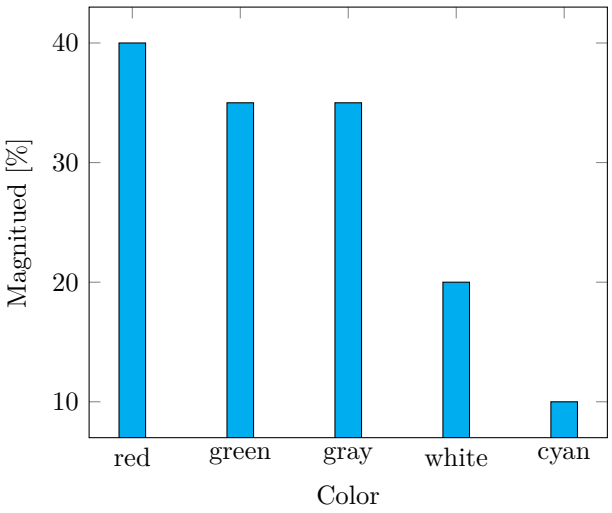

4.6 Example 6

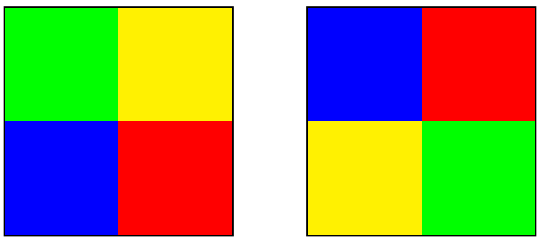

4.7 Example 7

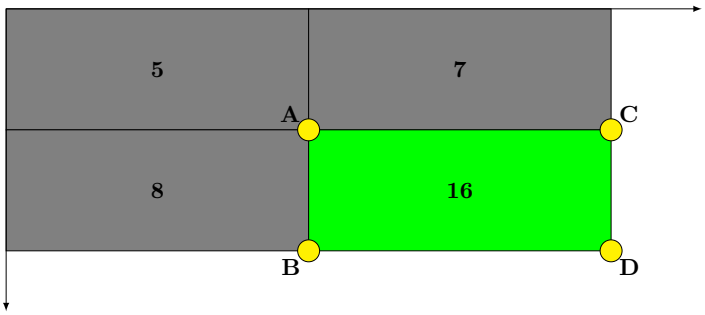

4.8 Example 8

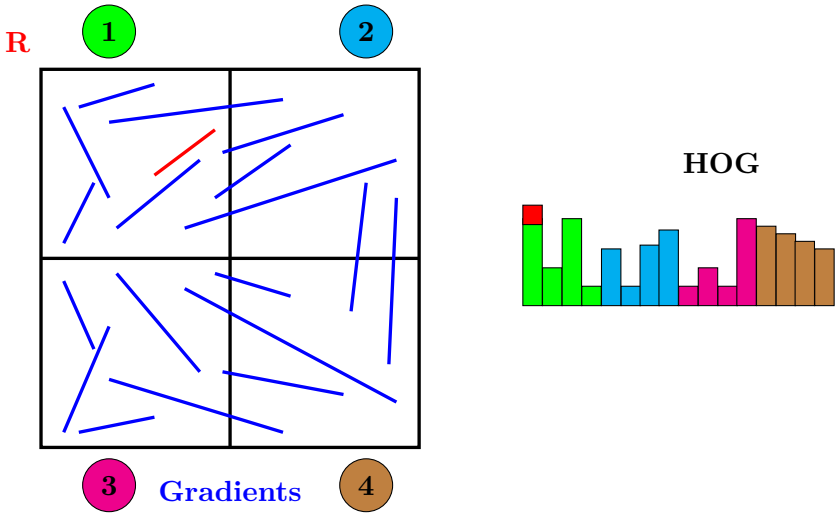

4.9 Example 9

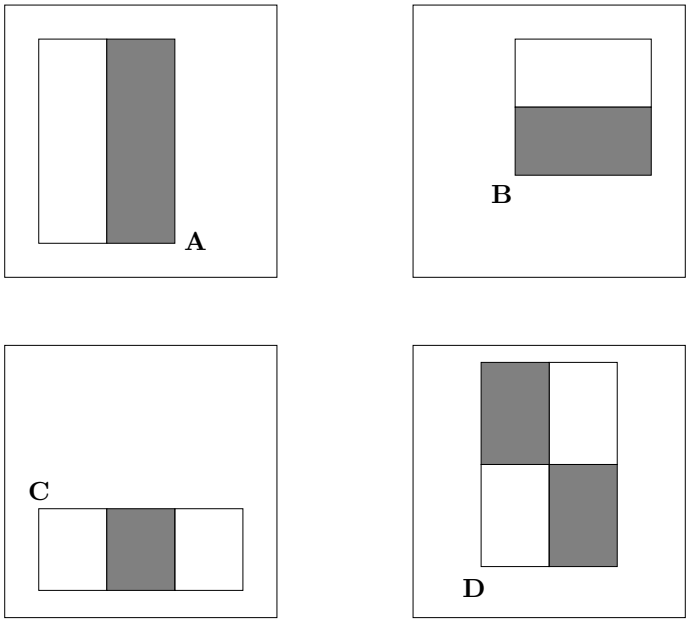

4.10 Example 10

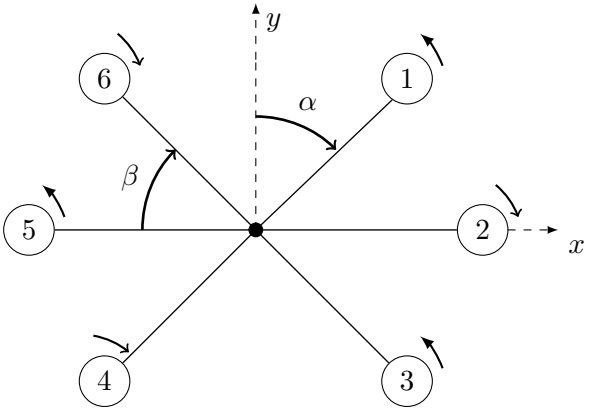

4.11 Example 11

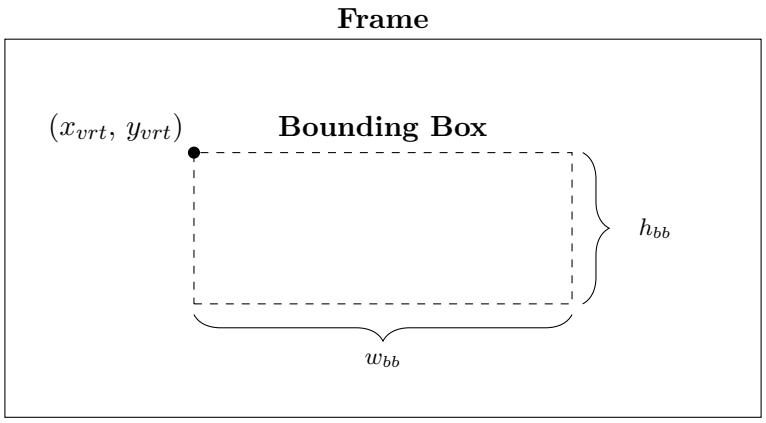

4.12 Example 12

0	1	2	3	4	5	6 to n+6	n+7	n+8
str	lgt	seq	cmp	sys	msg	dat	cks	cks

4.13 Example 13

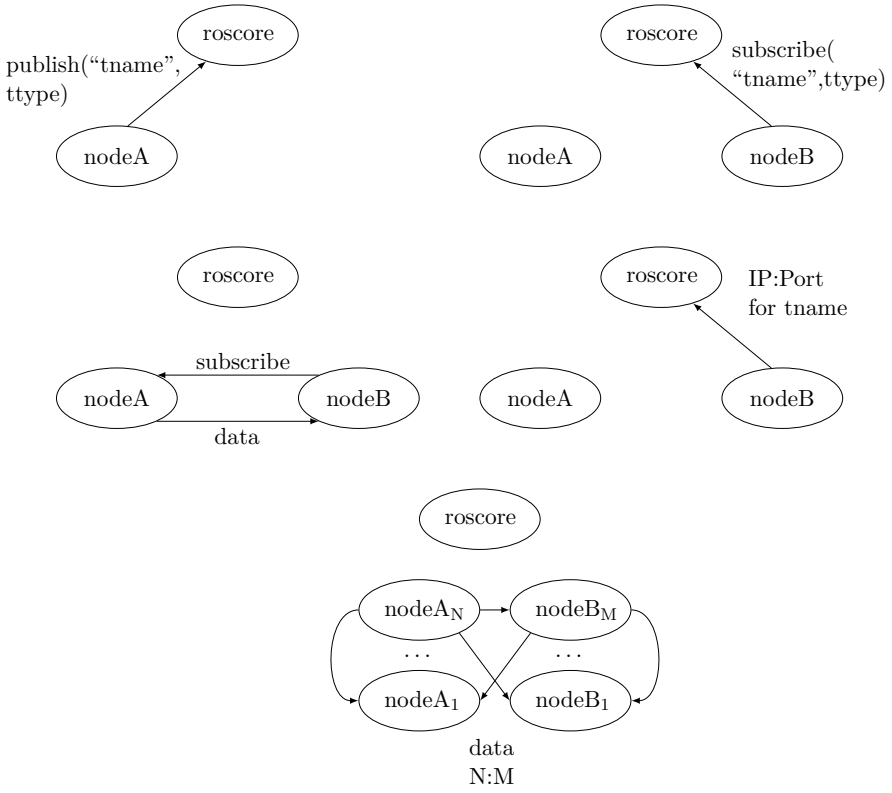

4.14 Example 14

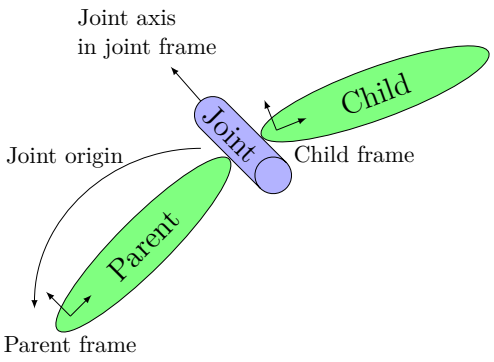

4.15 Example 15

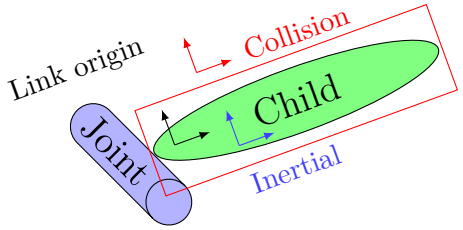

4.16 Example 16

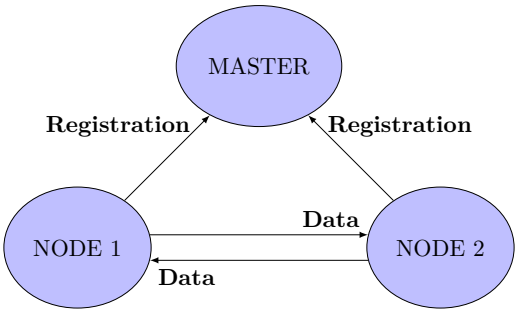

4.17 Example 17

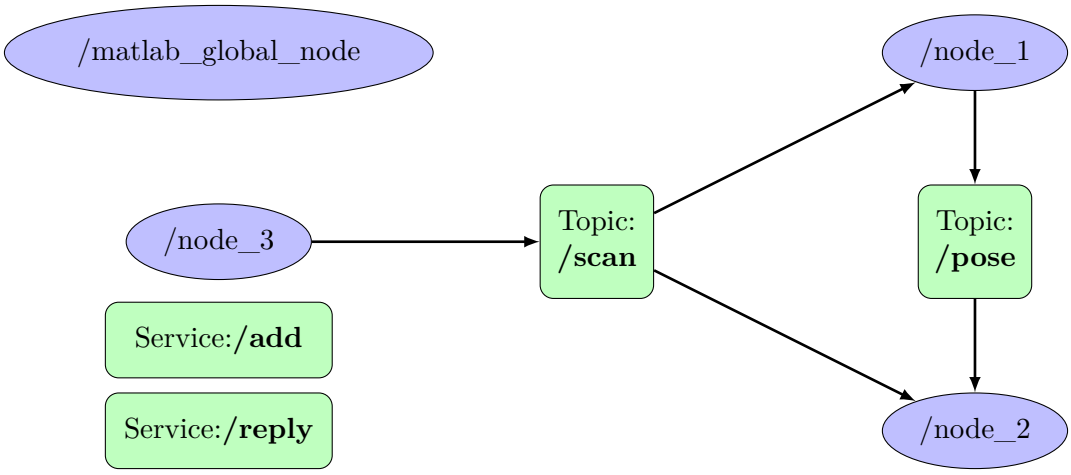

4.18 Example 18

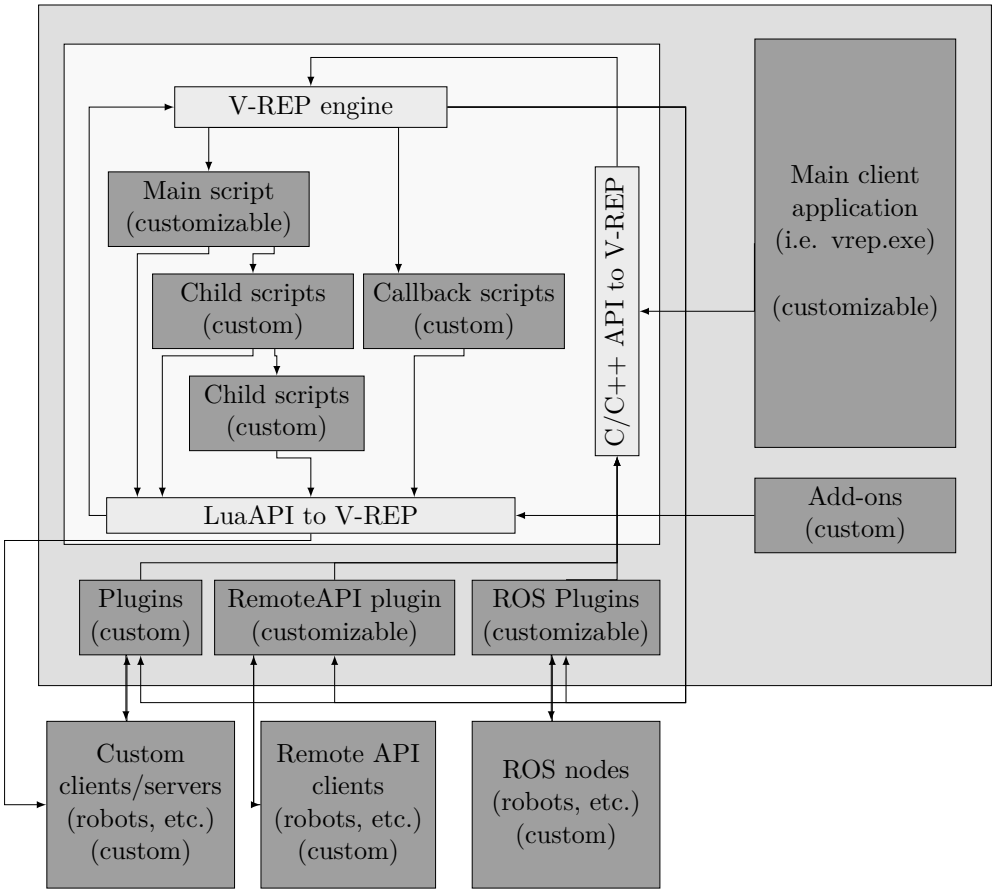

4.19 Example 19

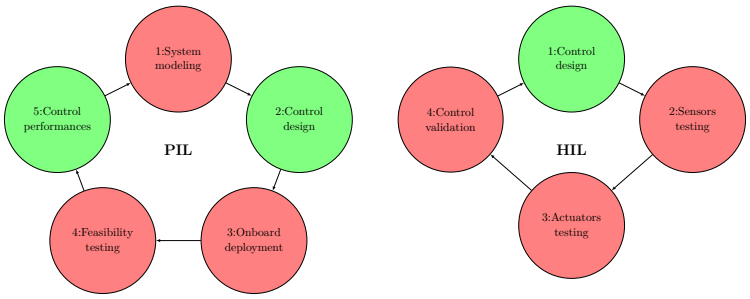

4.20 Example 20

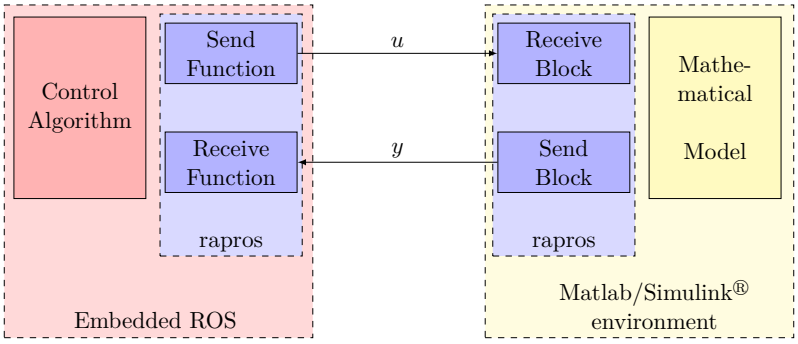

(a)

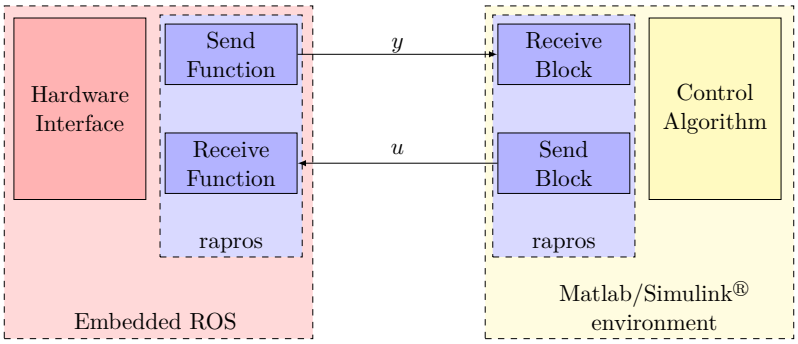

(b)

4.21 Example 21

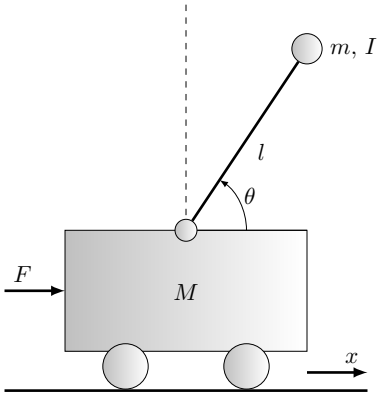

4.22 Example 22

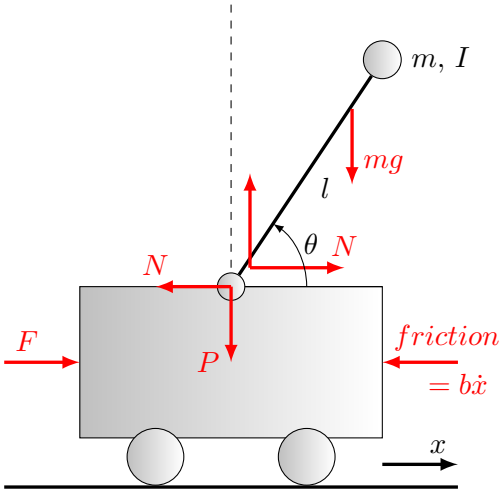

4.23 Example 23

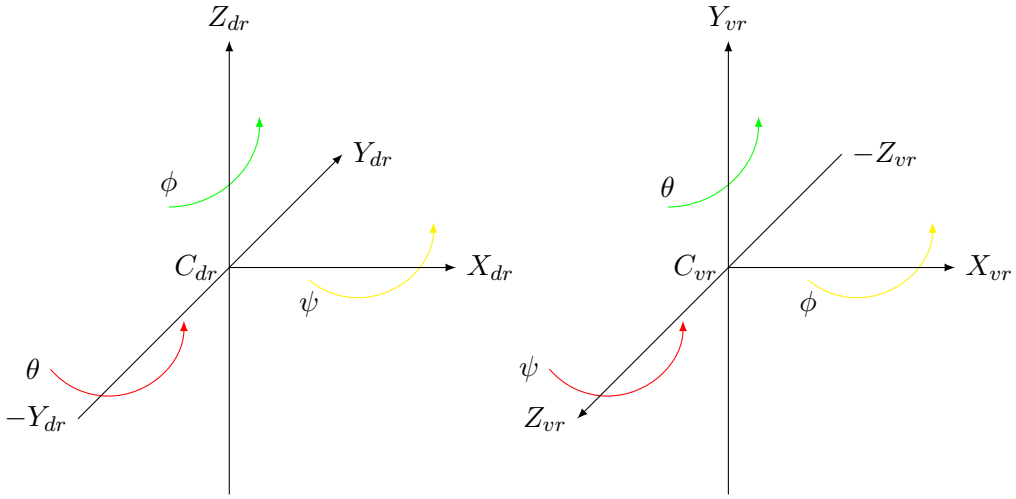

4.24 Example 24

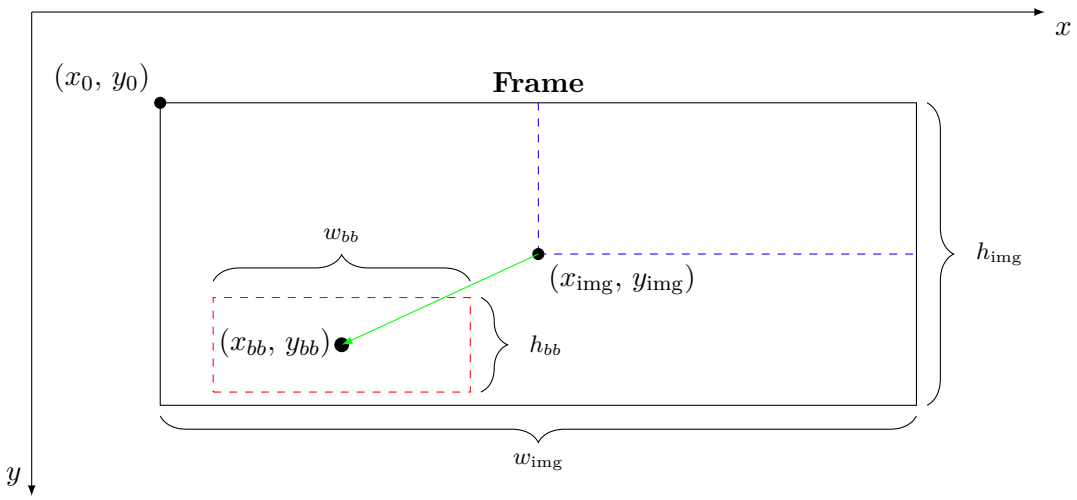

4.25 Example 25

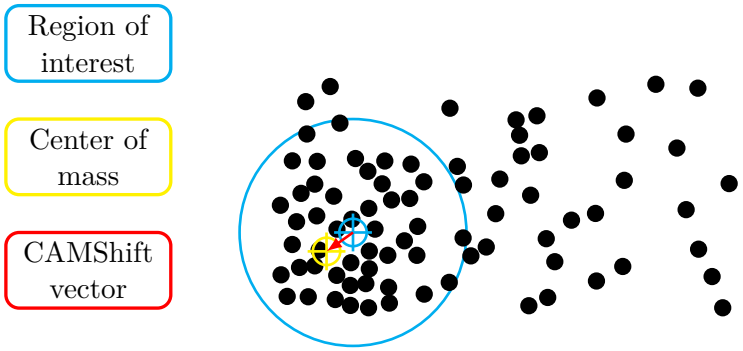

4.26 Example 26

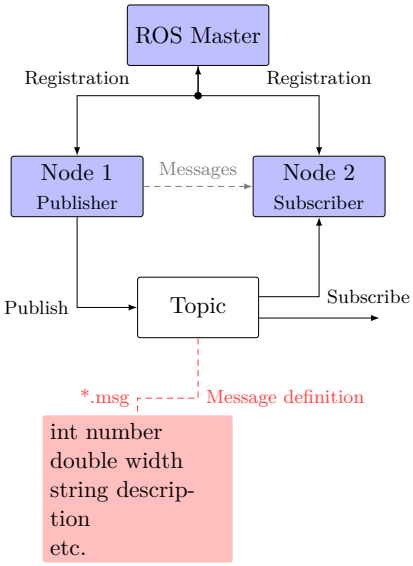

4.27 Example 27

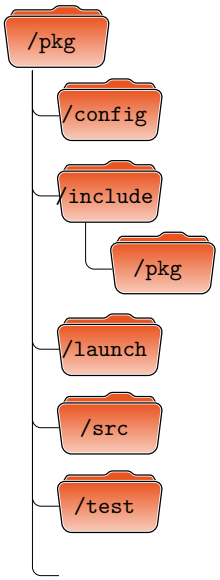

4.28 Example 28

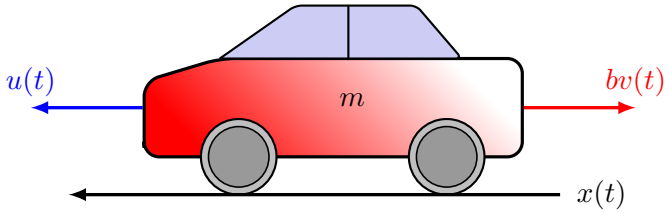

4.29 Example 29

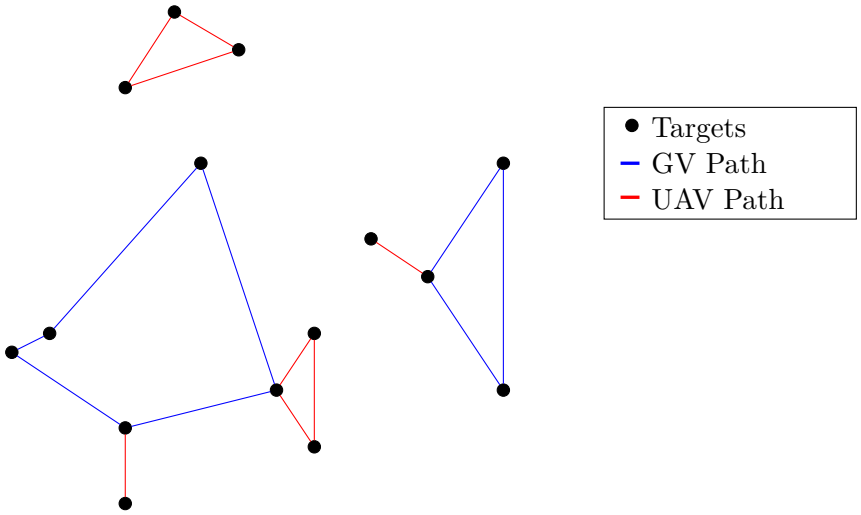

4.30 Example 30

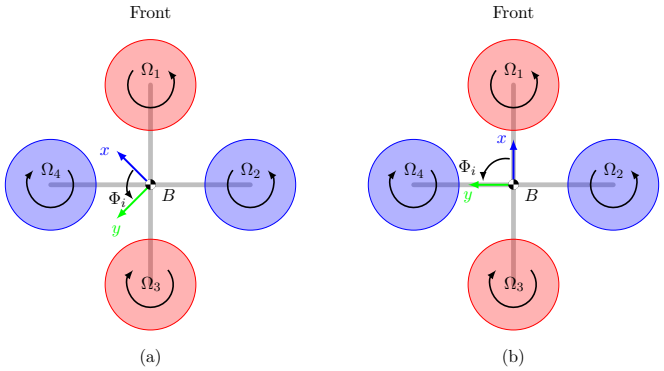
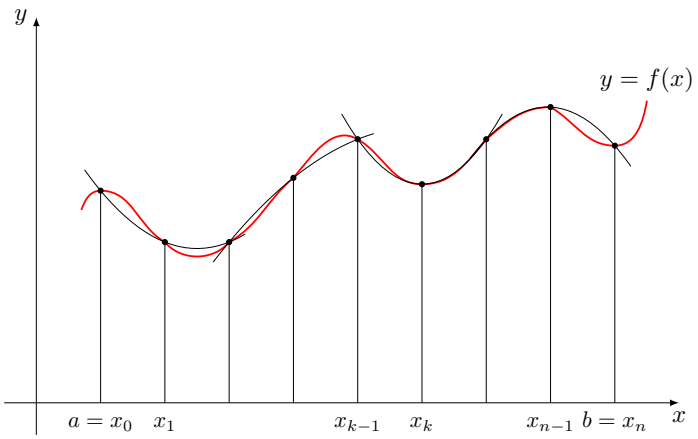
4.31 Example 36