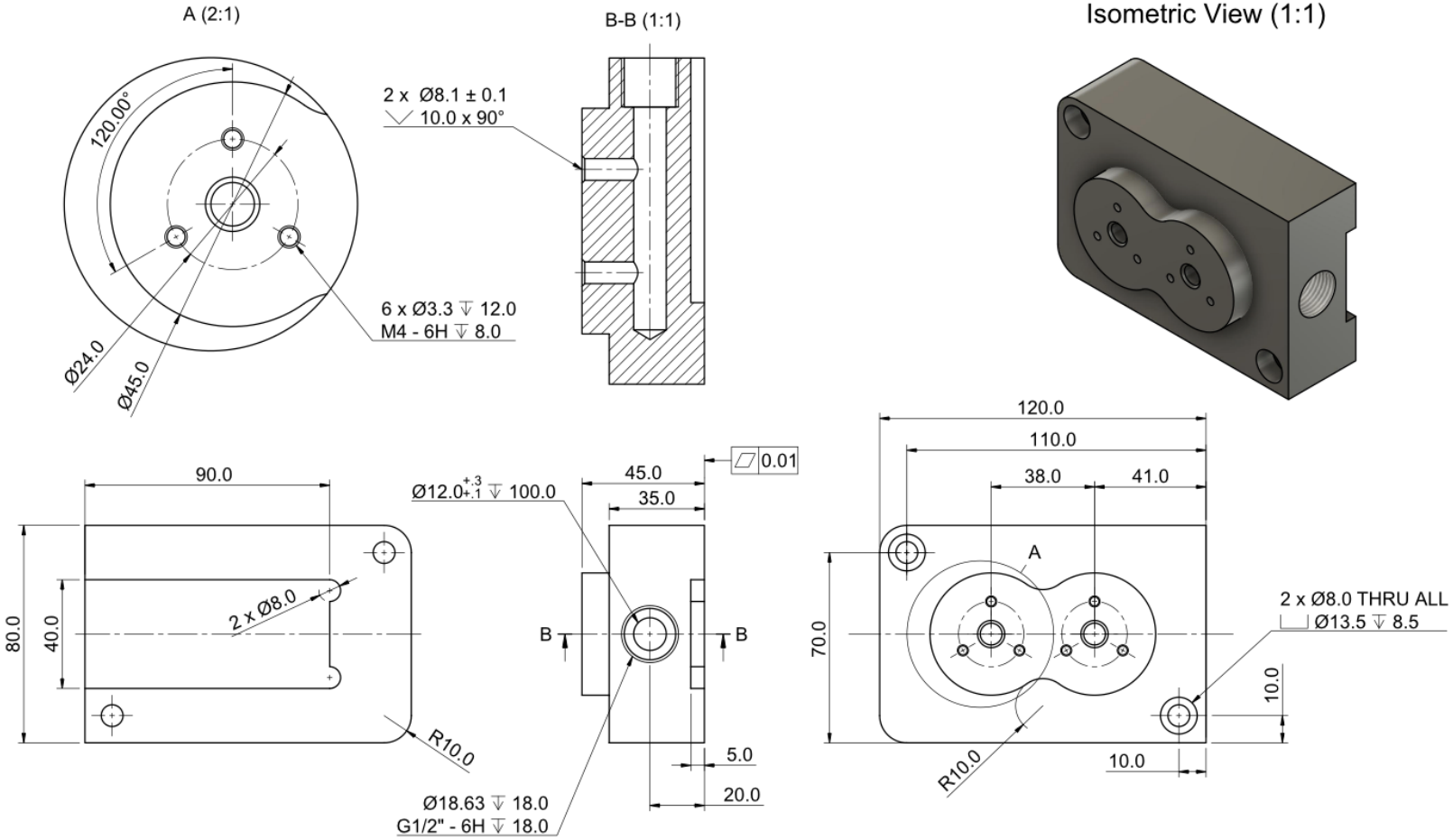

Scale 1:1

NOTES, UNLESS SPECIFIED OTHERWISE
1. ALL UNITS ARE IN MM
2. BREAK ALL SHARP EDGES
3. SURFACE ROUGHNESS Ra 1.6 µm OR BETTER

Material:	Al 6061
Color:	N.A.
Finish:	As-machined
Drawing & Tolerancing Standard:	ISO 2768-1

Dept. 3D Hubs	Technical reference 110-B	Created by Alkaios 06/03/2018	Approved by Ben 08/03/2018
1st Angle Proj.		Document type	Document status
		Title Liquid mixer Version 2	DWG No. 1
			Rev. 3 / Date of issue 06/03/2018 / Sheet 1/1