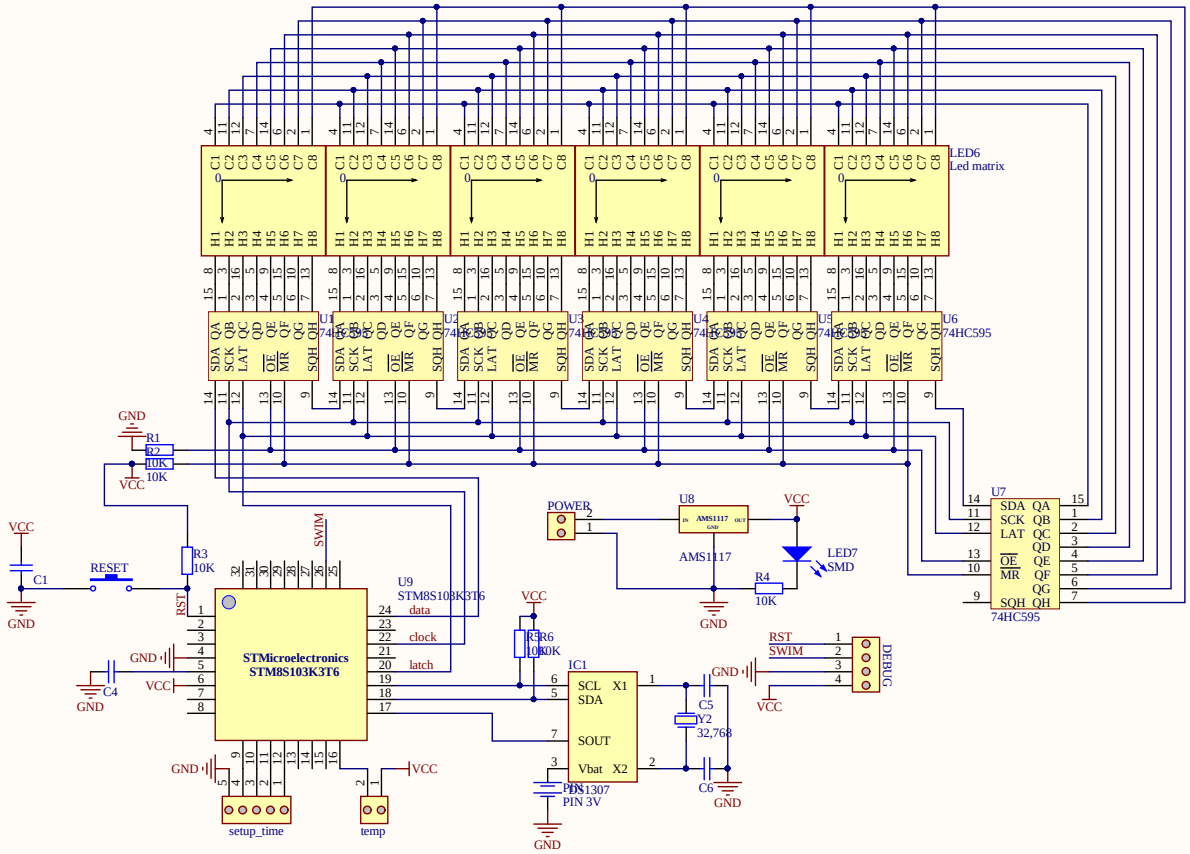

Title		
Size B	Number	Revision
Date: 6/22/2017		Sheet of
File: D:\OneDrive\..\Sheet2.SchDoc		Drawn By:

Design by quoclaptk@gmail.com
08/04/2017

Design by quoclaptk@gmail.com
08/04/2017

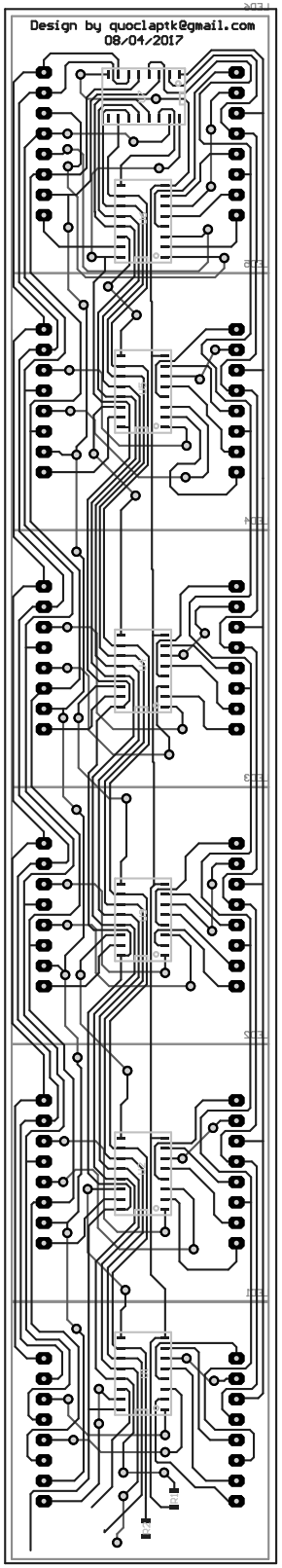
Design by quoclaptk@gmail.com
08/04/2017