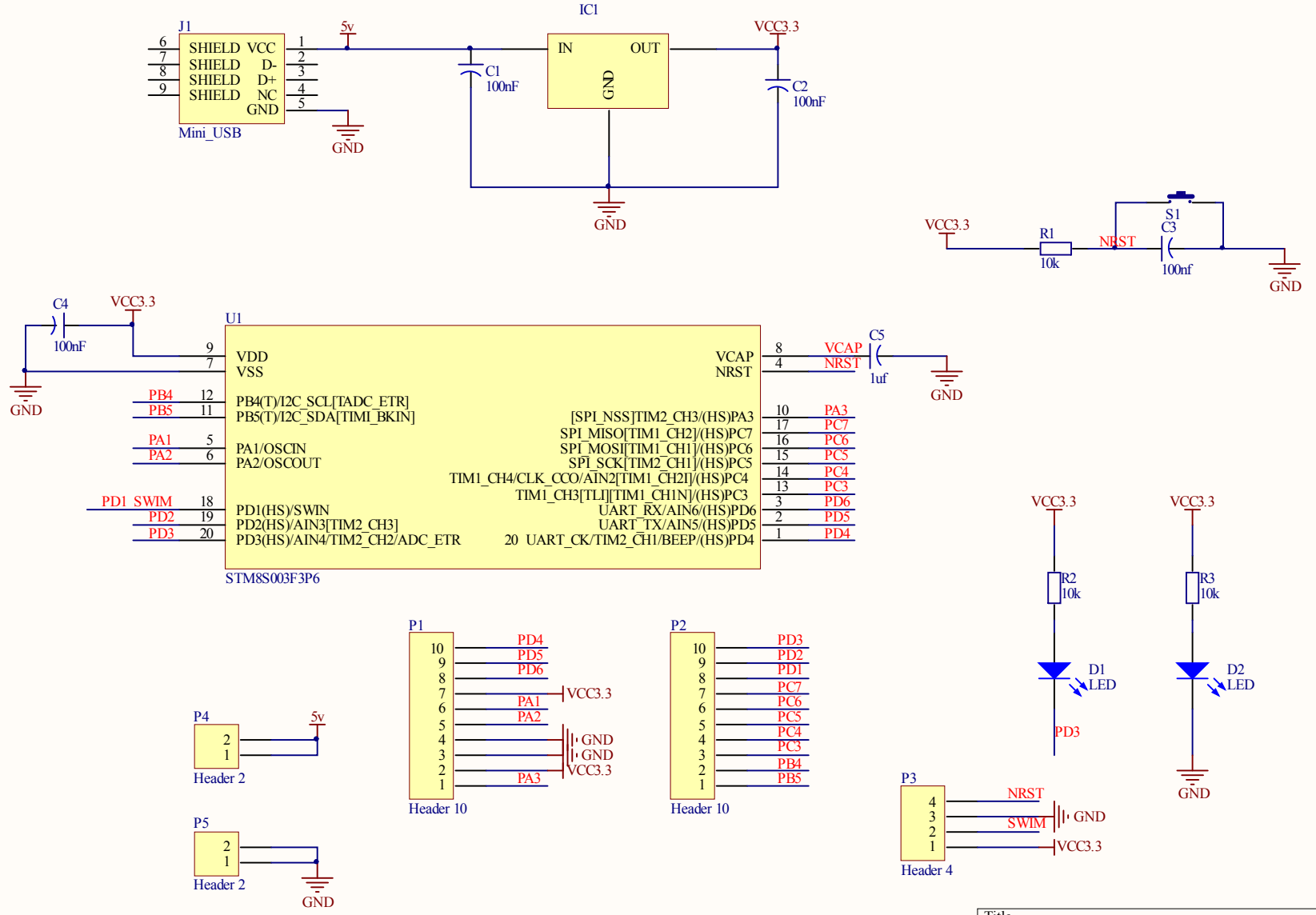

Title		
Size A4	Number	Revision
Date: 2015/1/5	Sheet of	
File: F:\电子-程文\..\STM8S003F3P6.SchDoc	Drawn By:	