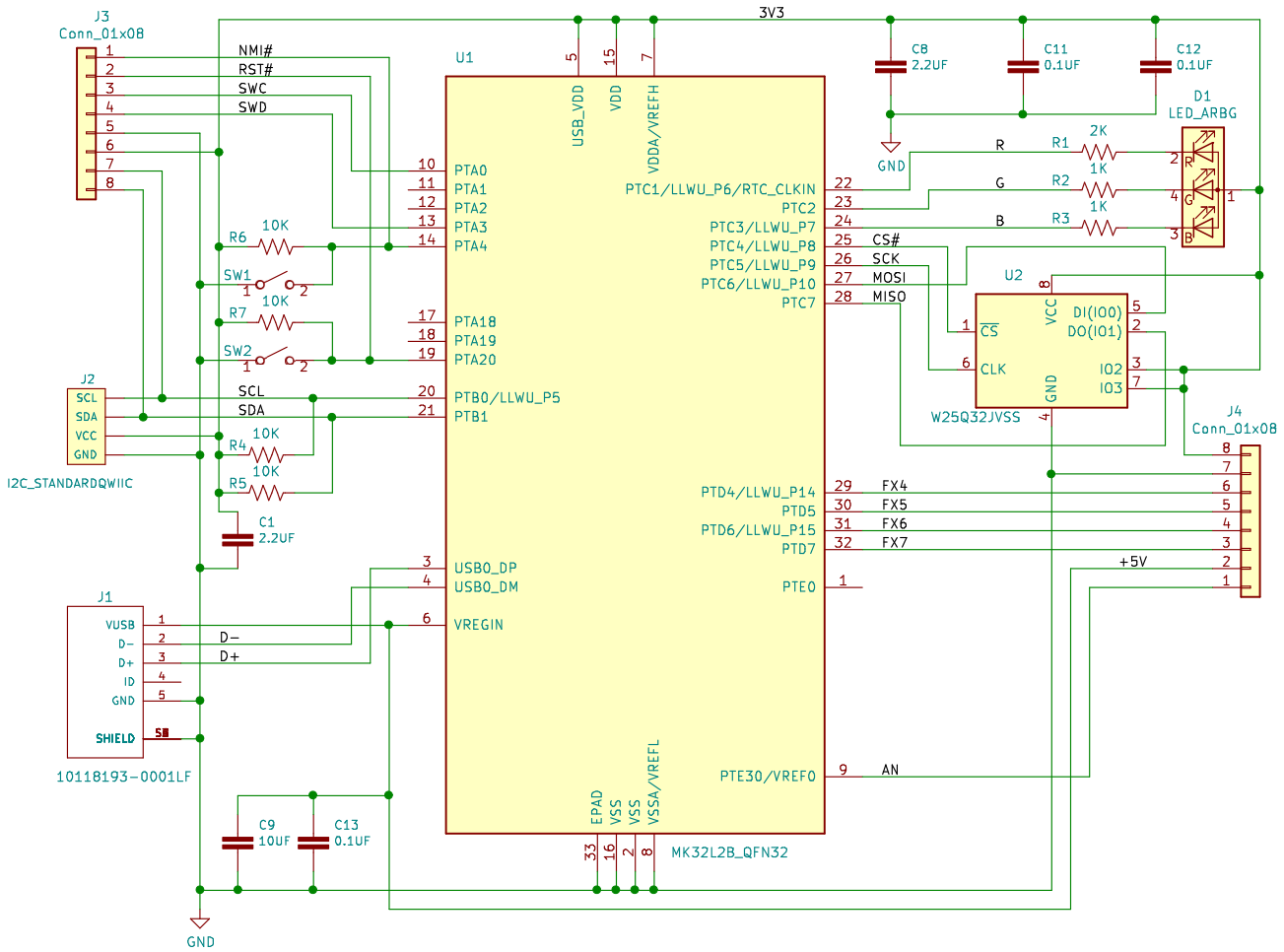

Sheet: /
File: kuiick.sch

Title:

Size: A4	Date:	Rev:
KiCad E.D.A. kicad 5.99.0−unknown−c3175b486ubuntu16.04.1		Id: 1/1