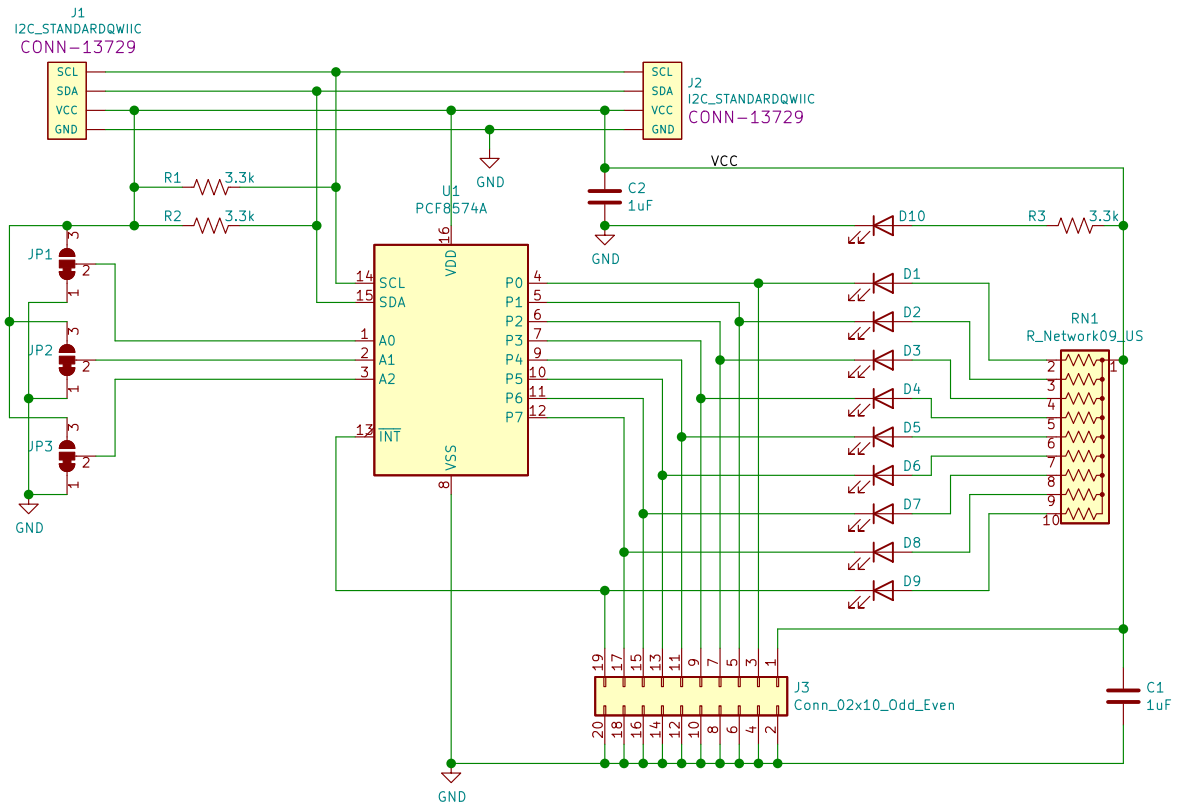

Steiert Solutions

open hardware

XXX-00000

Sheet: /

File: qgpio.sch

Title: QGPIO

Size: A4	Date:	Rev:
KiCad E.D.A. kicad 5.1.6-c6e7f7d86ubuntu16.04.1		Id: 1/1