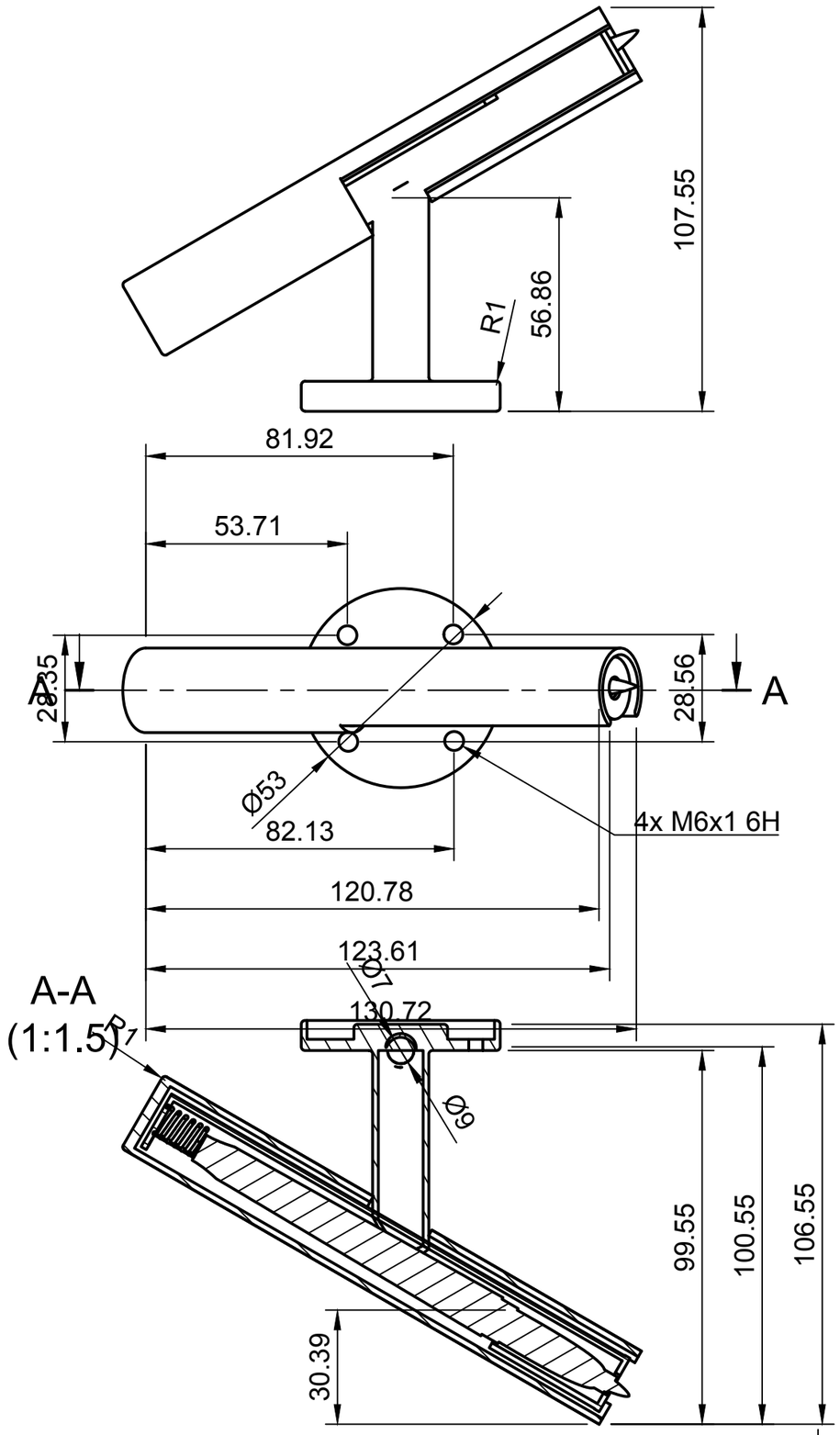

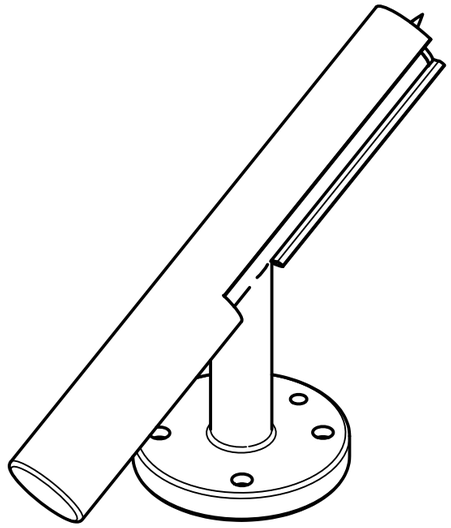

Dept.	Technical reference	Created by	Approved by
		Juliana Góngora 17/06/25	Gerhaldine Suarez
		Document type	Document status
		Title: Ensamble final	DWG No. 004
		Rev.	Date of issue	Sheet 4/4

UNIVERSIDAD NACIONAL DE COLOMBIA