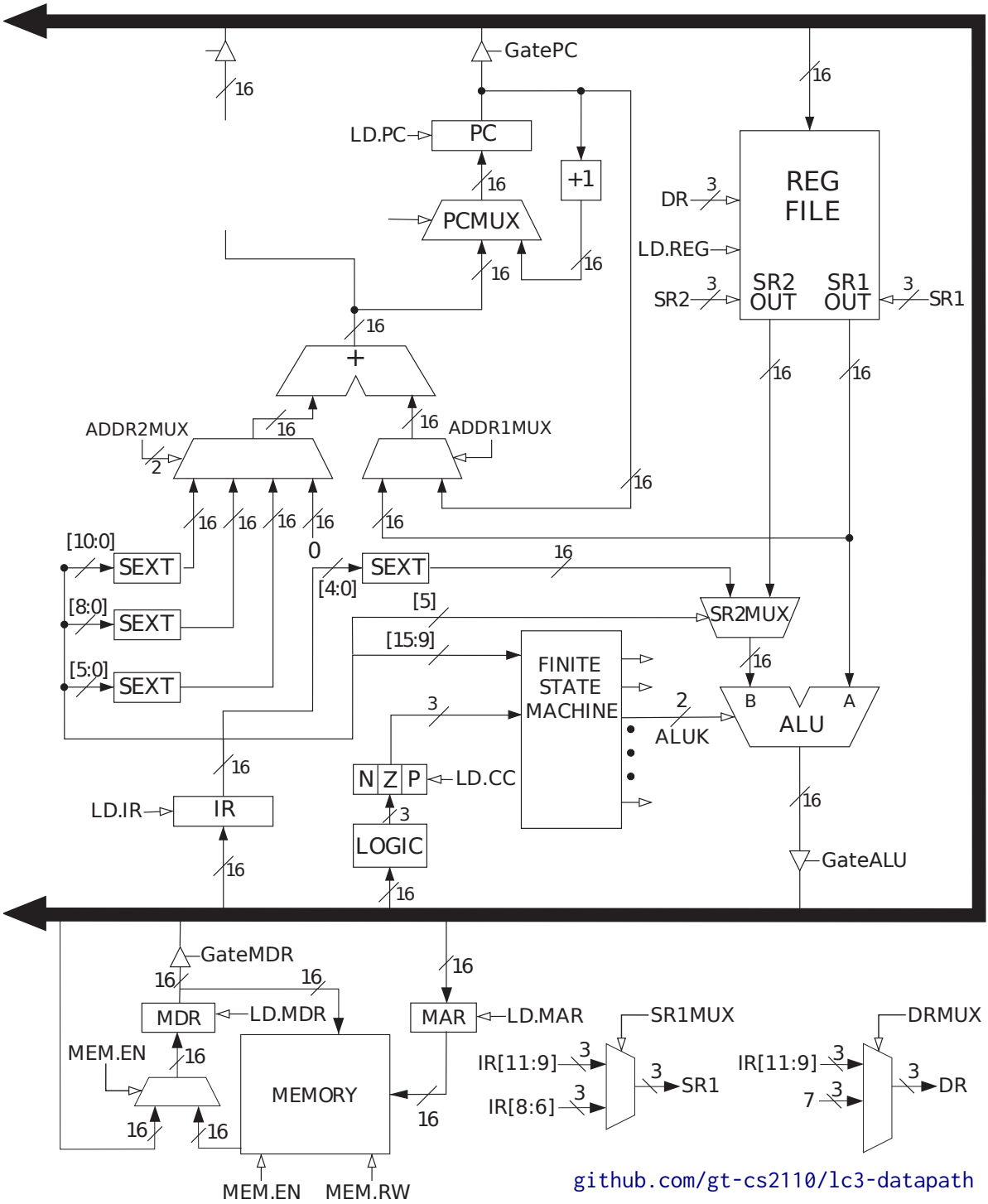

github.com/gt-cs2110/lc3-datapath