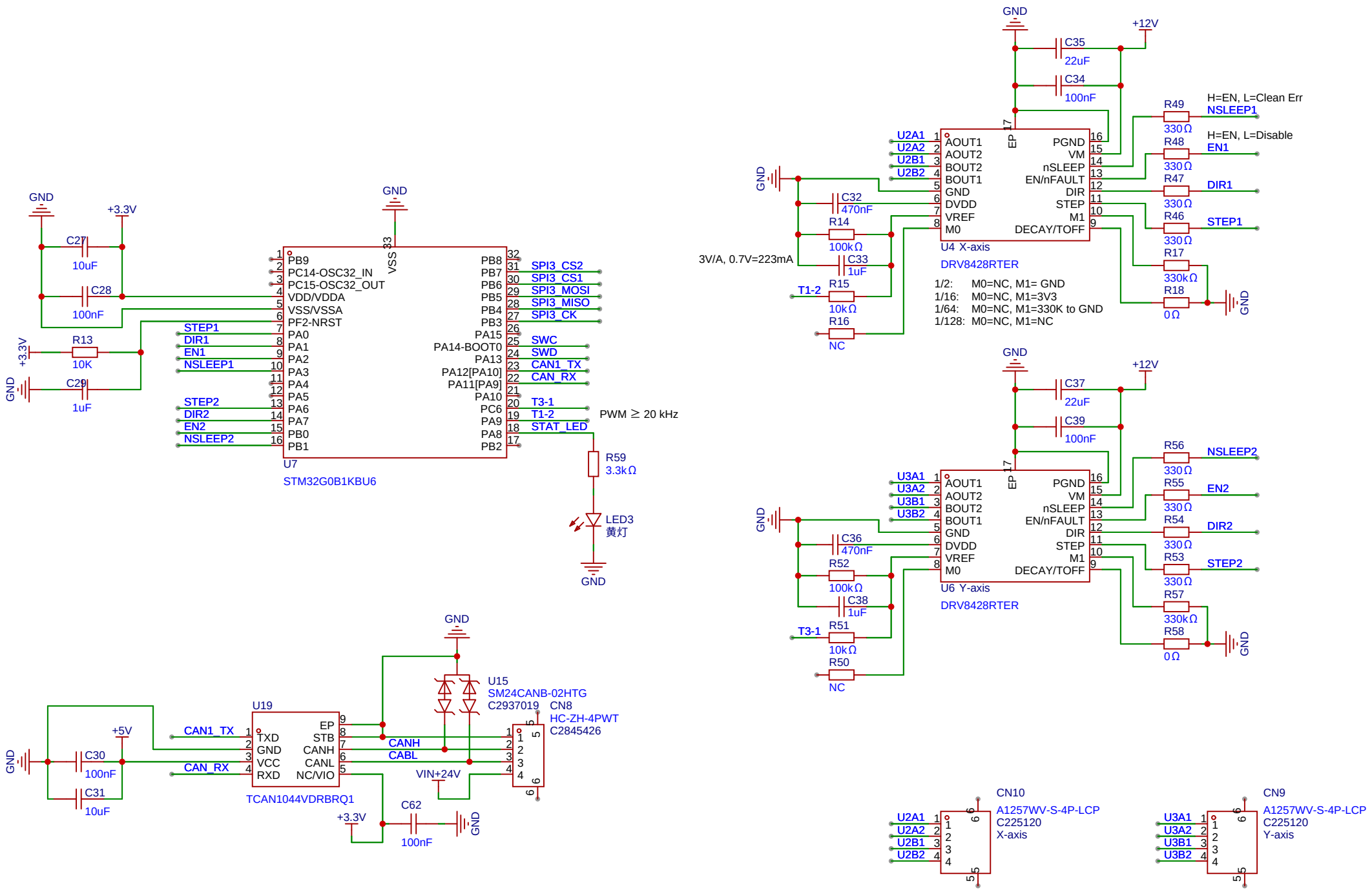
GND
+3.3V
C27
10uF
C28
100nF
R13
10K
C29
1uF
STEP1
DIR1
EN1
NSLEEP1
STEP2
DIR2
EN2
NSLEEP2
PB9
PC14-OSC32_IN
PC15-OSC32_OUT
VDD/VDDA
VSS/VSSA
PF2-NRST
PA0
PA1
PA2
PA3
PA4
PA5
PA6
PA7
PB0
PB1
PB8
PB7
PB6
PB5
PB4
PB3
PA15
PA14-BOOT0
PA13
PA12[PA10]
PA11[PA9]
PA10
PC6
PA9
PA8
PB2
SPI3_CS2
SPI3_CS1
SPI3_MOSI
SPI3_MISO
SPI3_CK
SWC
SWD
CAN1_TX
CAN_RX
T3-1
T1-2
STAT_LED
PWM ≥ 20 kHz
U7
STM32G0B1KBU6
R59
3.3kΩ
LED3
黄灯
U19
TCAN1044VDRBRQ1
TXD
GND
VCC
RXD
EP
STB
CANH
CANL
NC/VIO
CANH
CABL
U15
SM24CANB-02HTG
C2937019
CN8
HC-ZH-4PWT
C2845426
VIN+24V
C30
100nF
C31
10uF
+5V
C62
100nF
+12V
C35
22uF
C34
100nF
U2A1
U2A2
U2B1
U2B2
AOUT1
AOUT2
BOUT2
BOUT1
DVDD
VREF
M0
PGND
VM
nSLEEP
EN/nFAULT
DIR
STEP
M1
DECAY/TOFF
C32
470nF
R14
100kΩ
C33
1uF
R15
10kΩ
R16
NC
3V/A, 0.7V=223mA
U4 X-axis
DRV8428RTER
1/2: M0=NC, M1= GND
1/16: M0=NC, M1=3V3
1/64: M0=NC, M1=330K to GND
1/128: M0=NC, M1=NC
R49
330Ω
H=EN, L=Clean Err
NSLEEP1
R48
330Ω
H=EN, L=Disable
EN1
R47
330Ω
DIR1
R46
330Ω
STEP1
R17
330kΩ
R18
0Ω
C37
22uF
C39
100nF
U3A1
U3A2
U3B1
U3B2
C36
470nF
R52
100kΩ
C38
1uF
R51
10kΩ
R50
NC
U6 Y-axis
DRV8428RTER
R56
330Ω
NSLEEP2
R55
330Ω
EN2
R54
330Ω
DIR2
R53
330Ω
STEP2
R57
330kΩ
R58
0Ω
CN10
A1257WV-S-4P-LCP
C225120
X-axis
CN9
A1257WV-S-4P-LCP
C225120
Y-axis

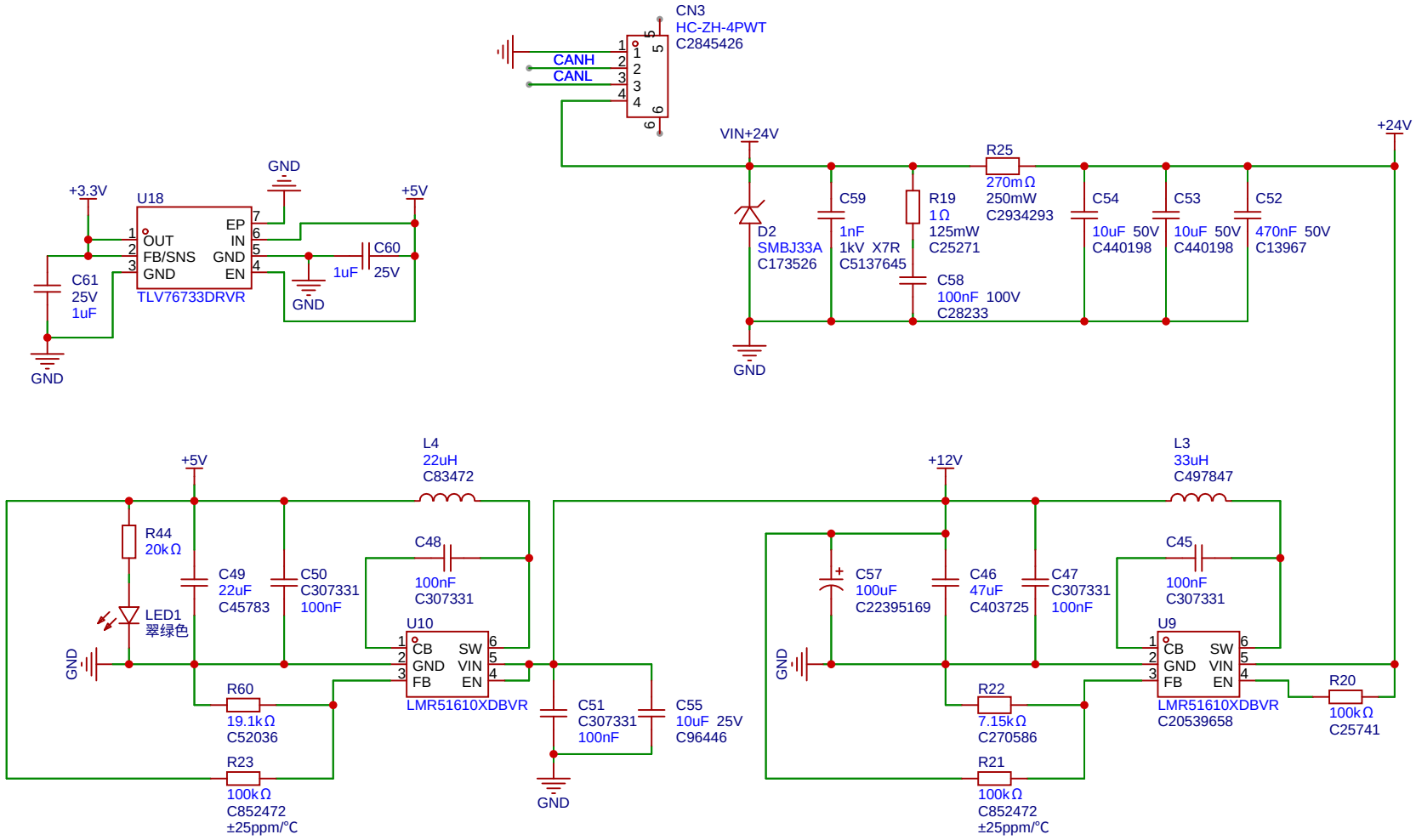
CN3
HC-ZH-4PWT
C2845426
CANH
CANL
VIN+24V
+24V
R25
270mΩ
250mW
C2934293
D2
SMBJ33A
C173526
C59
1nF
1kV X7R
C5137645
R19
1Ω
125mW
C25271
C58
100nF 100V
C28233
C54
10uF 50V
C440198
C53
10uF 50V
C440198
C52
470nF 50V
C13967
GND
+3.3V
U18
OUT
FB/SNS
GND
EP
IN
GND
EN
TLV76733DRVR
C61
25V
1uF
C60
1uF 25V
+5V
L4
22uH
C83472
R44
20kΩ
LED1
翠绿色
C49
22uF
C45783
C50
C307331
100nF
C48
100nF
C307331
U10
CB
GND
FB
SW
VIN
EN
LMR51610XDBVR
R60
19.1kΩ
C52036
R23
100kΩ
C852472
±25ppm/°C
C51
C307331
100nF
C55
10uF 25V
C96446
+12V
L3
33uH
C497847
C57
100uF
C22395169
C46
47uF
C403725
C47
C307331
100nF
C45
100nF
C307331
U9
CB
GND
FB
SW
VIN
EN
LMR51610XDBVR
C20539658
R22
7.15kΩ
C270586
R21
100kΩ
C852472
±25ppm/°C
R20
100kΩ
C25741