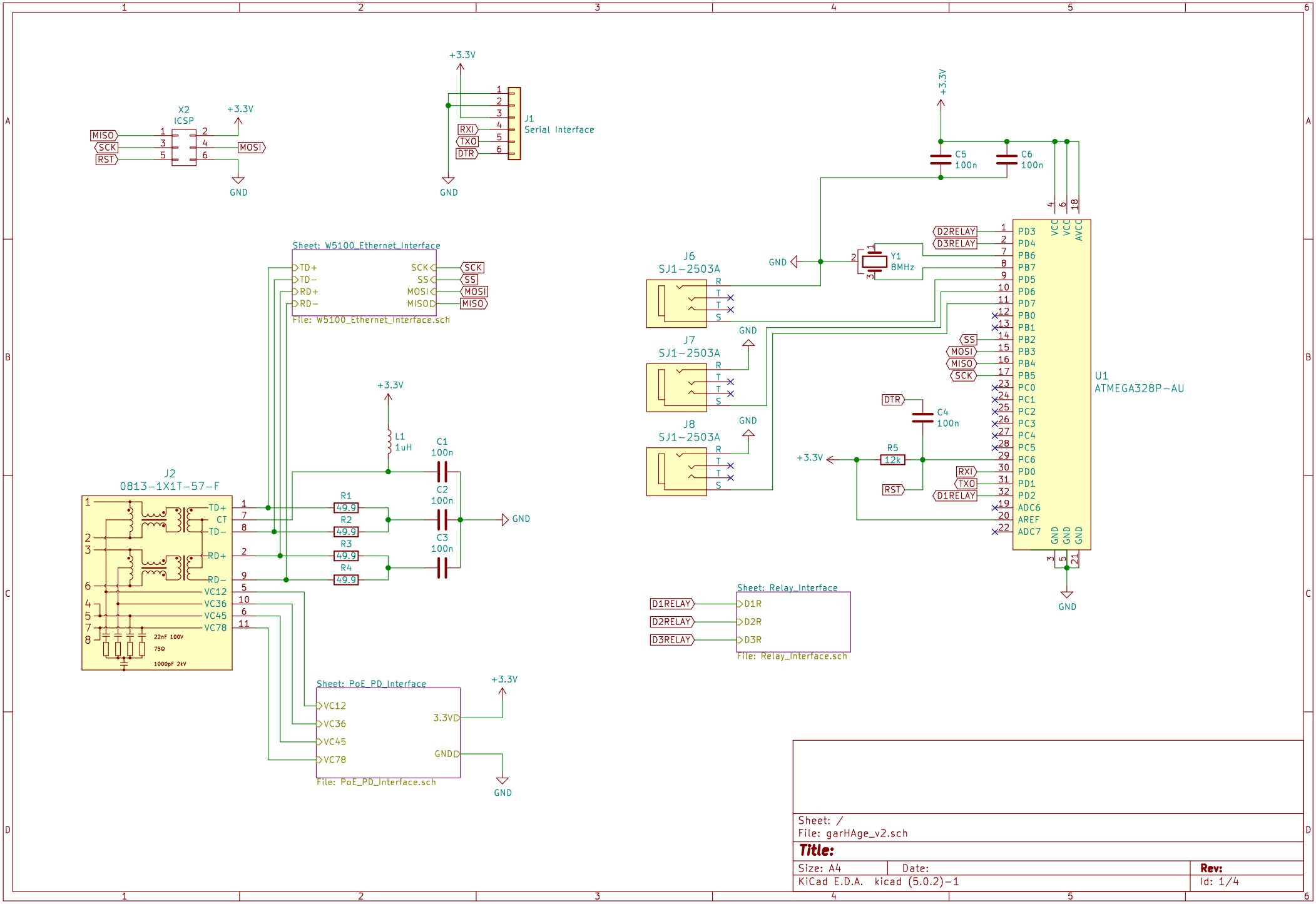

Sheet: /
File: garHAge_v2.sch

Title:

Size: A4	Date:	**Rev:**
KiCad E.D.A. kicad (5.0.2)-1		Id: 1/4

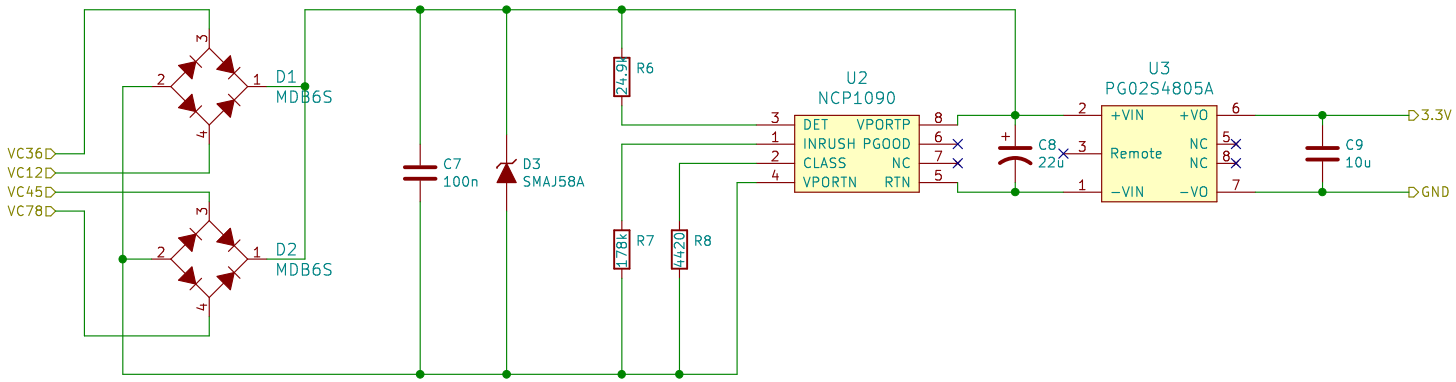

Sheet: /PoE_PD_Interface/
File: PoE_PD_Interface.sch

Title:

Size: A4	Date:	**Rev:**
KiCad E.D.A. kicad (5.0.2)−1		Id: 2/4

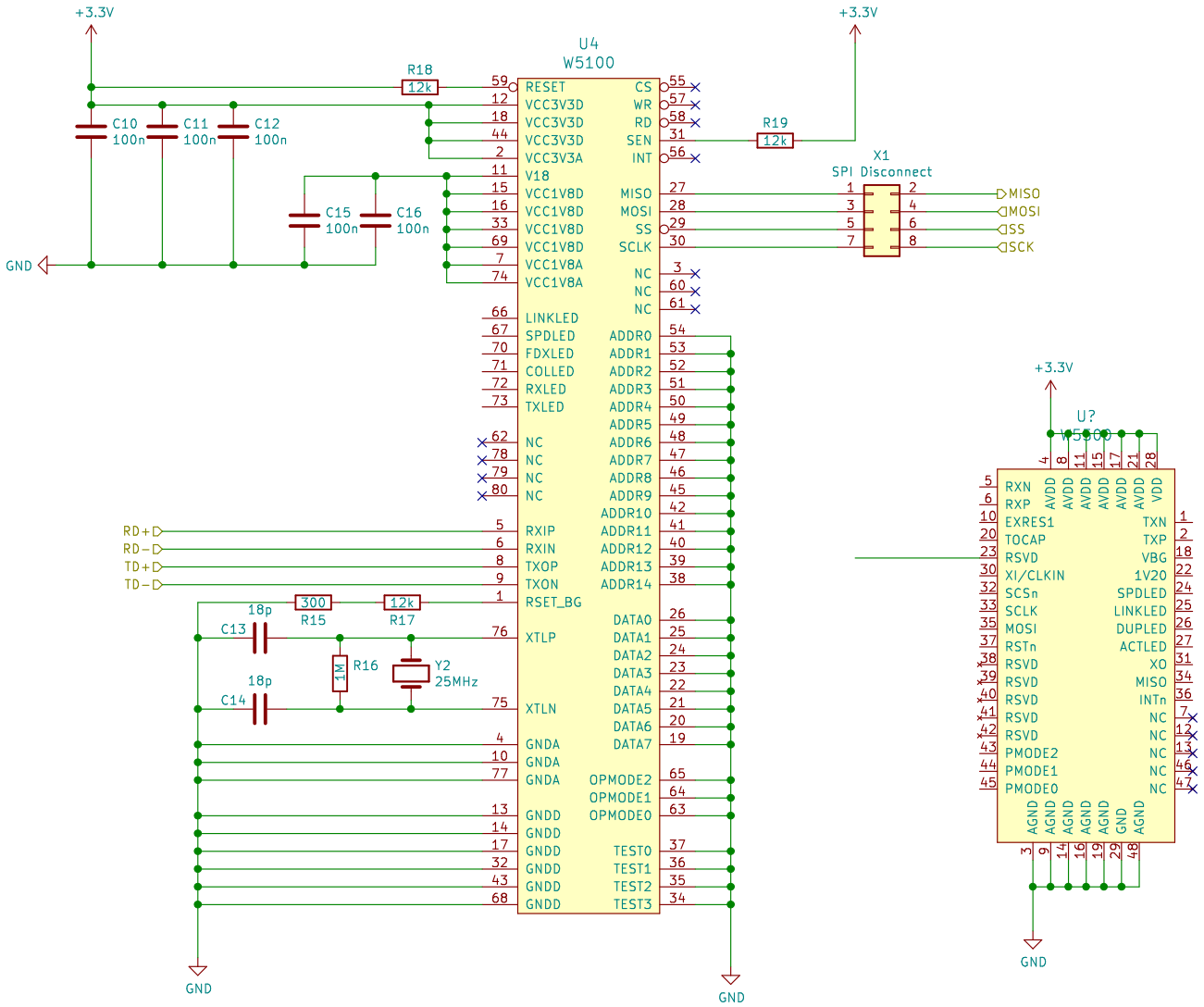

Sheet: /W5100_Ethernet_Interface/
File: W5100_Ethernet_Interface.sch

Title:

Size: A4	Date:	Rev:
KiCad E.D.A. kicad (5.0.2)-1		Id: 3/4

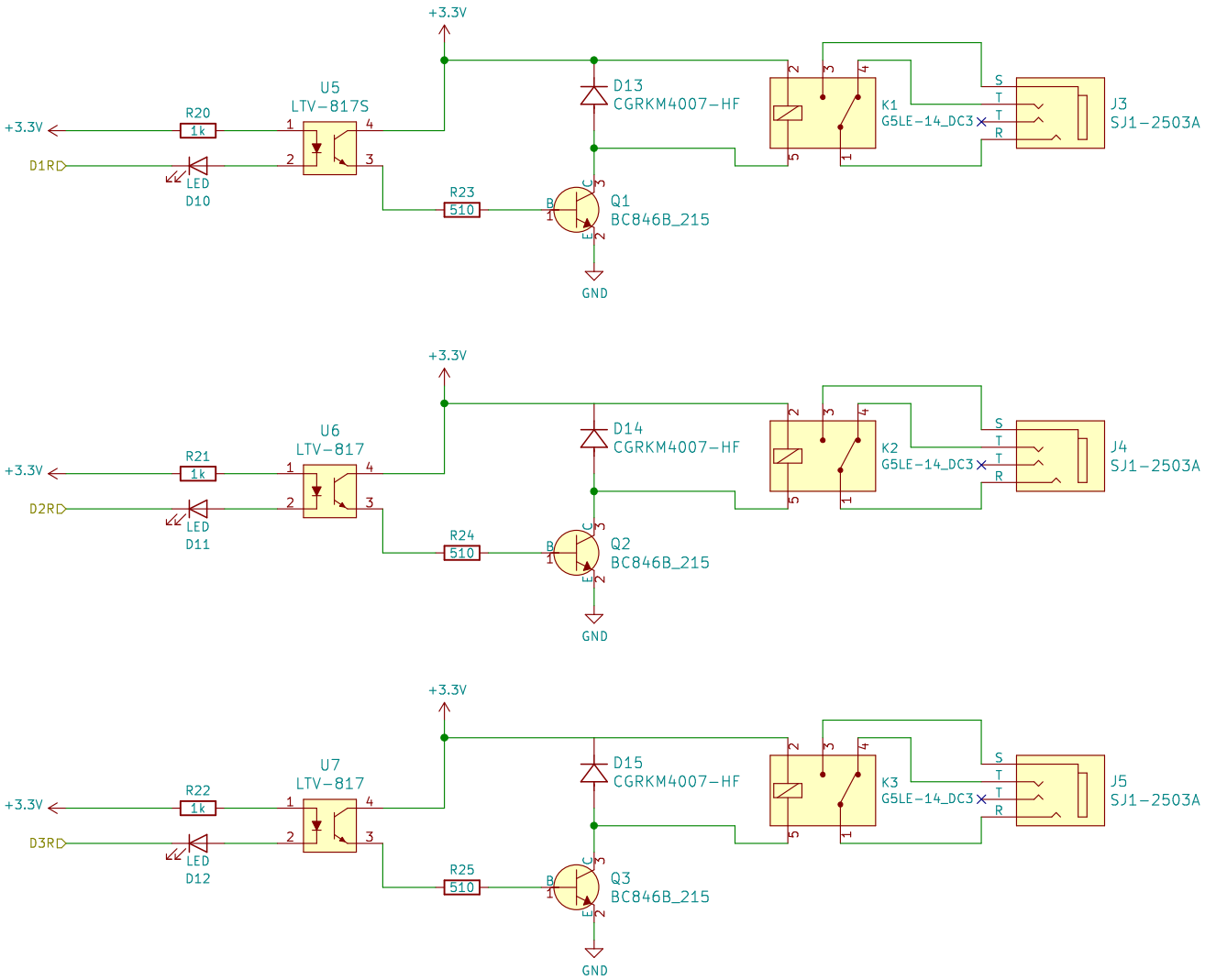

Sheet: /Relay_Interface/
File: Relay_Interface.sch

Title:

Size: A4	Date:	Rev:
KiCad E.D.A. kicad (5.0.2)-1		Id: 4/4