EVERY COLLINEAR SET IS FREE

Bellairs Workshop on Geometry and Graphs 2017–18

May 28, 2018

Abstract. We show that if a planar graph G has a plane straight-line embedding in which a subset S of its vertices are collinear, then there is a planar straight-line embedding of G in which all vertices in S are on the y-axis and in which they have prescribed y-coordinates. This solves an open problem posed by Ravsky and Verbitsky in 2008. In their terminology, we show that every collinear set is free. This result has applications in graph drawing, untangling, universal point subsets, and related areas.

1 Introduction

In a planar graph, $G = (V, E)$, a *collinear set* is a set of vertices $S \subseteq V$ such that G has a plane straight-line embedding in which all vertices in S are embedded on a single line. A collinear set S is a *free collinear set* if, for any collinear set of points $X \subset \mathbb{R}^2$, $|X| = |S|$, G has a plane straight-line embedding in which the vertices of S are drawn on the points in X. Ravsky and Verbitsky [7, 6] ask the following question:

> How far or close are parameters $\tilde{v}(G)$ and $\bar{v}(G)$? It seems that *a priori* we even cannot exclude equality. To clarify this question, it would be helpful to (dis)prove that every collinear set in any straight line drawing is free.

In the context of this quote, $\tilde{v}(G)$ and $\bar{v}(G)$ are the respective sizes of the largest collinear set and largest free collinear set in G. Here, we prove that, for every planar graph G, $\tilde{v}(G) = \bar{v}(G)$ by showing that every collinear set is a free collinear set.

Da Lozzo et al. [5] gave the following characterization of collinear sets:

Theorem 1. *A set S of the vertices of a graph G is a collinear set if and only if there exists a plane embedding of G and a Jordan curve C that contains every vertex in S, that intersects the interior of at least one face of G, and such that the intersection of C with each edge of G is either empty, a single point, or the entire edge.*

The surprising aspect of this characterization is that one can straighten the embedding of G so that it becomes a plane straight line embedding and simultaneously straighten C so that it becomes (say) the y-axis while preserving the combinatorial relationship between C and G. The result in this paper shows that, not only can C be straightened, but it can also be stretched to place the collinear set at prescribed locations on the y-axis.

1.1 Applications and Related Work

Free collinear sets have a number of applications in graph drawing and related areas. Many of these are outlined by Dujmović [4], who will write the rest of this section...

Cano et al. [2, Theorem 2] show that if a Jordan curve C intersects each edge of a plane embedding of a graph G in at most one point and does not contain any vertex of G, then G has a straight-line plane embedding in which the edges of G intersected by C become line segments that cross the y-axis, and these crossings occur in the same order. A restatement of Theorem 1 that we describe as Theorem 2 in Section 2 gives an extension of this result to curves that include vertices of G.

1.2 Proof Outline

Without loss of generality we may assume that the line we are interested in is the y-axis. Let C^- and C^+ denote the finite and infinite connected components, respectively, of $\mathbb{R}^2 \setminus C$, which we call the *interior* and *exterior* of C, respectively. We say that an edge of G *crosses* C if it contains one endpoint in C^- and one endpoint in C^+.

Tutte's convex embedding theorem [8] allows one to (plane straight-line) embed an internally 3-connected graph with the vertices of the outer face embedded on any prescribed convex polygon having the correct number of vertices. If the vertices in S form a path in G, then no edge of G crosses C. In this case, it is straightforward to prove that S is a free collinear set using two applications of Tutte's Convex Embedding Theorem [8], one on the graph induced by $V(G) \cap (C \cup C^-)$ and one on the graph induced by $V(G) \cap (C \cup C^+)$.

Thus, the main difficulty comes from edges of G that cross C. These edges must be drawn so that they cross the y-axis in prescribed (and arbitrarily small) intervals between the prescribed locations of vertices in S. An extreme version of this (sub)problem occurs when Q is an embedded graph in which every edge of Q crosses C and we are given a prescribed location at which each edge of Q should cross the y-axis. The most difficult instances occur when Q is edge-maximal, meaning that Q is a quadrangulation.

In Section 3 we show that, given a quadrangulation Q and a Jordan curve C that intersects the interior of every edge of Q in exactly one point, it is possible to find a plane straight-line embedding of Q whose edges intersect the y-axis in a prescribed set of points. This is done by showing that a certain system of linear equations has a solution. This proof involves some linear algebra and some arguments that use continuity. An extension of this result then shows that some independent set S^* of *split edges* in Q can be contracted to obtain a graph Q_{S^*} that has an embedding where the contracted vertices are embedded at prescribed points on the y-axis.

In Section 4 we prove that every collinear set is free. It turns out that the intuition that quadrangulations with prescribed edge crossings is the hardest case can be made formal. In particular, given a curve C, a triangulation G and a set $S \subset V(G)$ as in Theorem 1, a series of combinatorial reductions can be performed on G that convert it to a quadrangulation Q with a special set S^* of split edges that has a bijection with the vertices in S. We then apply the results in Section 3 to obtain a plane straight-line embedding of Q_{S^*} in which the contracted vertices (which correspond to vertices in S) are at the appropriate lo-

cations on the y-axis. These reductions can then be undone to obtain a plane straight-line embedding of G with the vertices of S at the appropriate locations on the y-axis.

Section 2, next, begins our discussion with a collection of definitions and results that we use throughout.

2 Definitions

GR SUGGEST: SEPARATE STANDARD DEFINITIONS (BORING) FROM DEFINITIONS THAT ARE SPECIFIC FOR OUR PAPER

For a function $f : \mathbb{R} \to \mathbb{R}$, we use $\lim_{x \downarrow t} f(x)$ and $\lim_{x \uparrow t} f(x)$ to denote the one-sided limits of $f(x)$ as x approaches t from above and below, respectively. For a point x in a topological space, any open set that contains x is a *neighbourhood* of x.

A *curve* C is a continuous function from $[0,1]$ to $\mathbb{R}^2$. The points $C(0)$ and $C(1)$ are called the *endpoints* of C. A curve C is *simple* if $C(s) \neq C(t)$ for any $0 \leq s < t < 1$; it is *closed* if $C(0) = C(1)$. A *Jordan curve* $C : [0,1] \to \mathbb{R}^2$ is a simple closed curve. Starting in the current paragraph, we will often fail to distinguish between a curve C and it's image $\{C(t) : 0 \leq t \leq 1\}$. In such cases we may qualify the curve as *open* in which case we are referring to the set $\{C(t) : 0 < t < 1\}$. We say that a point $x \in \mathbb{R}^2$ is *on* C if $x \in C$.

For any Jordan curve C, $\mathbb{R}^2 \setminus C$ has exactly two connected components: One of these, C^-, is finite and the other, C^+, is infinite. We say that a Jordan curve is *oriented* if walking along C from $C(0)$ to $C(1)$ results in a counterlcockwise traversal of the boundary of C^-, so that C^- is locally to the left of C and C^+ is locally to the right of C.

When we talk about the order of the points on a simple curve C we mean the partial order $\prec_C$ over $\mathbb{R}^2$, where $C(a) \prec_C C(b)$ if and only if $a < b$. For any $0 \leq a \leq b \leq 1$, the *subcurve* of C between a and b is the curve $C'(t) = C(a + t(b-a))$. We may also talk about the subcurve of C between points $x, y \in \mathbb{R}^2$ where $x \prec_C y$. In this case we mean the subcurve of C between the unique $a < b$ such that $x = C(a)$ and $y = C(b)$.

All graphs G considered in this paper are finite, simple, and undirected. We use $V(G)$ and $E(G)$ to denote the vertex set and edge set of G, respectively. For any two vertices $x, y \in V(G)$, we use xy to denote the the edge of G incident to x and y.

An *embedding* $\Gamma = (\varphi, \rho)$ of a graph G consists of a one-to-one mapping $\varphi : V(G) \to \mathbb{R}^2$ and a mapping ρ from $E(G)$ to curves in $\mathbb{R}^2$ such that, for each $xy \in E(G)$, $\rho(xy)$ has endpoints $\varphi(x)$ and $\varphi(y)$. Starting immediately, we will often say that G is an embedded graph without explicitly referring to the pair $\Gamma = (\varphi, \rho)$. In these cases, we identify vertices of G with their points and edges of G with their curves. By default, an edge curve includes its endpoints, otherwise we specify that it is an *open* edge.

A *straight-line embedding* is an embedding which each edge is a line segment. A *plane embedding* is an embedding in which no two edges intersect except possibly at their common endpoint. A *Fáry embedding* is a plane straight-line embedding.

The *faces* of an embedded graph G are the maximal connected subsets of $\mathbb{R}^2 \setminus \bigcup_{xy \in E(G)} xy$. Note that one of these faces is unbounded and we call this the *outer* face. The other faces are called *inner* faces or *bounded* faces. When discussing plane embeddings, we

use the convention of listing the vertices of a face as they appear when traversing the face in counterclockwise order.

A *triangulation* is a plane embedded graph in which each face is bounded by a 3-cycle. A *quadrangulation* is plane embedded graph in which each face is bounded by a 4-cycle. Every quadrangulation has $n \geq 4$ vertices and Euler's formula implies that it has $2n - 4$ edges.

A *cutset* of a graph G is a set of vertices whose removal disconnects G. A *separating cycle* is a sequence of vertices that form a cycle and a cutset in G. A *separating triangle* is a separating cycle of length 3. If G is a plane embedded graph, then, for any separating cycle C there is an oriented Jordan curve whose image is the union of edges in C. In this case, the interior and exterior of C refer to the interior and exterior of the corresponding Jordan curve.

A *contraction* of the edge xy in a graph G is the process of identifying x and y to obtain a new graph G' with $V(G') = V(G) \cup \{v\} \setminus \{x, y\}$ and $E(G') = E(G) \setminus \{ab \in E(G) : \{a, b\} \cap \{x, y\} \neq \emptyset\} \cup \{va : xa \in E(G)\} \cup \{va : ya \in E(G)\}$. In this case, we say that we *contract* xy in G to obtain the graph G'. If G is a triangulation and we contract the edge $xy \in E(G)$, then the resulting graph G' is also a triangulation provided that x and y is not part of any separating triangle. More specifically, the plane embedding of G extends naturally to a plane embedding of G'.

We say that an oriented Jordan curve C is *admissible* for an embedded graph G if $C(0) = C(1)$ is in the interior of the outer face of G and the intersection between C and each edge e of G is either empty, a single point, or the entire edge e. We say that C is *proper* for G if it is admissible and it does not contain any vertex of G; i.e., C is proper if its intersection with any edge e of G is either empty, or in the interior of e.

We will make use of the following restatement of Theorem 1 which follows from the proof in [5]:

Theorem 2. *Let G be a plane embedding and let $C : [0, 1] \to \mathbb{R}^2$ be an admissible Jordan curve for G. Then G has a Fáry embedding Γ in which the vertices of G on C are on mapped to the y-axis, the vertices of G in C^- are to the left of the y-axis and the vertices of G in C^+ are to the right of the y-axis. Furthermore, the sequence of vertices and edges encountered in Γ while traversing the y-axis from $-\infty$ to $+\infty$ is identical to the sequence of vertices and edges encountered in G while traversing C.*

3 Quadrangulations

In this section we develop tools for finding Fáry embeddings of a quadrangulation Q whose edges cross the y-axis at prescribed locations. We begin with the special case in which the curve C intersects each open edge of Q in exactly one point. Later we will extend this to allow C to go through vertices.

3.1 Improper Curves

Definition 1. *An* A-graph *(AD-HOC TERM, THINK OF A BETTER NAME) is a graph G together with a Jordan curve/arc C that intersects every edge of C in exactly one point, possibly*

an endpoint, and where every vertex on C has at least one incident edge on each side.

Proposition 1. *A-graphs have the following properties:*

1. *Every face, including the outer face, is a quadrilateral or a triangle.*
2. *Every triangle face contains one vertex on C, one vertex in L and one vertex in R.*
3. *Every v vertex on C is incident to precisely two triangles, one above v and one below v. (This holds also when v is a boundary vertex; in this case, one of the triangles is the other face.)*
4. *Every vertex is incident to at least two edges.*
5. *Every vertex on C is incident to at least three edges. EXCEPTION: If v is on the outer face, it can have degree 2. WE MUST EXCLUDE THE DEGREE-2 CASE SOMEWHERE. IT IS TRIVIAL TO HANDLE. I DON'T KNOW WHERE THE PROPER PLACE FOR HANDLING IT.*

Theorem 3. *(Generalization of Theorem 4)*

Let

1. *G be an A-graph;*
2. *$C : [0,1] \to \mathbb{R}^2$ be an admissible Jordan curve for T;*
3. *$r_1, \ldots, r_k \subseteq E(V) \cup E(G)$ be the sequence of vertices and open edges of T that are intersected by C, in the order that they are intersected by C;*
4. *$y_1 < \cdots < y_k$ be any sequence of numbers; and*
5. *.... [Δ be a triangle that is compatible with $r_1, \ldots, r_m$ and $y_1, \ldots, y_m$.]*

G has a Fáry embedding in which the outer face f [is Δ] and, for each $i \in \{1, \ldots, k\}$,

1. *if r_i is a vertex, then r_i is drawn on the y-axis, with y-coordinate y_i;*
2. *If r_i is an edge whose intersection with C is a single point interior to r_i, the intersection of r_i with the y-axis has y-coordinate y_i.*

Proof. We will describe the straight-line embedding by assigning a slope s_e to every edge $e \in E$. Since there can be no vertical edges, the slopes are well-defined. We have $m = |E|$ slope variables.

Since every edge goes through a point on the y-axis with known coordinate, the slope fixes the line through the edge. Since every vertex not on C is incident to at least two edges that go through distinct points on the y-axis, location of such a vertex is fixed.

A necessary condition for the slopes is that the lines of edges that go through a common vertex should be concurrent: We can extend the function y to all edges, independently of how they intersect C. If e intersects C at an endpoint, we let y_e be the given y-coordinate of that endpoint. THINK ABOUT A BETTER NOTATION! Let v be a vertex v not on C, and let e_i, e_j, e_k be three edges incident to v. The fact that the three supporting lines of e_i, e_j, and e_k meet at a common point (the location of v) is expressed the following

concurrency constraint in terms of the slopes s_i, s_j, s_k:

$$\begin{vmatrix} 1 & 1 & 1 \\ s_i & s_j & s_k \\ y_i & y_j & y_k \end{vmatrix} = (y_j - y_k)s_i + (y_k - y_i)s_j + (y_i - y_j)s_k = 0 \tag{1}$$

Since $y_1, \ldots, y_m$ are given, this is a linear equation in $s_1, \ldots, s_m$. Writing this equation for all triplets of edges incident to a common vertex will include many redundant equations. If d_v edges meet in a vertex v, It suffices to take $d_v - 2$ equations: We choose two fixed incident edges e_i and e_j and run e_k through the remaining $d - 2$ edges, specifying that e_k should go through the common vertex of e_i and e_j.

It will be important to have as many equations as variables; thus, we add some more equations for the edges that emanate from a vertex on C. Suppose that edges $a_1, \ldots, a_k$ go to the left and edges $b_1, \ldots, b_l$ go to the right, from bottom to top. We have $k, l \geq 1$ and $k + l \geq 3$. Let us first look at the slopes on the right side. We want these slopes to be increasing: $s_{b_1} < s_{b_2} < \cdots < s_{b_l}$. We stipulate a stronger condition: We require that the slopes $s_{b_2}, \ldots, s_{b_{l-1}}$ partition the interval $[s_{b_1}, s_{b_l}]$ in fixed proportions. In other words

$$s_{b_i} = s_1 + \lambda_i (s_{b_l} - s_{b_1}), \tag{2}$$

for some fixed sequence $0 < \lambda_2 < \cdots < \lambda_{l-1} < 1$. For example, we might set $\lambda_i := (i-1)/(l-1)$. This gives $l-2$ equations, for $l \geq 2$. Similarly, we get $k-2$ equations for the slopes $s_{a_1}, \ldots, s_{a_k}$ on the left side, for $k \geq 2$. In addition, for $k \geq 2$ and $l \geq 2$, we require that the *range* of slopes on the two sides are in a fixed proportion

$$s_{a_1} - s_{a_k} = \mu (s_{b_l} - s_{b_1}), \tag{3}$$

for some fixed value $\mu > 0$.

We call the equations (2–3) the *proportionality constraints*. There are $(k + l) - 3$ such equations for the $k + l$ slopes. In other words, we have three degrees of freedom for the slopes out of a vertex. Figure 1 illustrates these degrees of freedom: We can shear the edges on the right side vertically, adding a constant to all slopes. We can independently shear all edges on the left side. In addition, we can vertically scale all lines jointly (both to the left and to the right), multiplying all slopes by a constant factor. If this factor is negative, we would reverse the order of the slopes. We will later see that other constraints prevent this. We can already observe that two slopes on one side determine all remaining slopes on that side. Moreover, the range of slopes on the other side ($s_{a_1} - s_{a_k}$ or $s_{b_l} - s_{b_1}$ is also determined.

The notations λ_i and μ are here used in a local sense; for a different vertex v, we may choose different constants. The total number of equations (1–3) turns out to be $m - 4$. This can be seen as follows: Let $n = |V|$ and let n_0 be the number of vertices on C. Assume that G has f_3 triangular and f_4 quadrangular faces.

Two triangles for every vertex on C (Property 3 of Proposition 1):

$$f_3 = 2n_0 \tag{4}$$

Euler's formula:

$$n + f_3 + f_4 = m + 2 \tag{5}$$

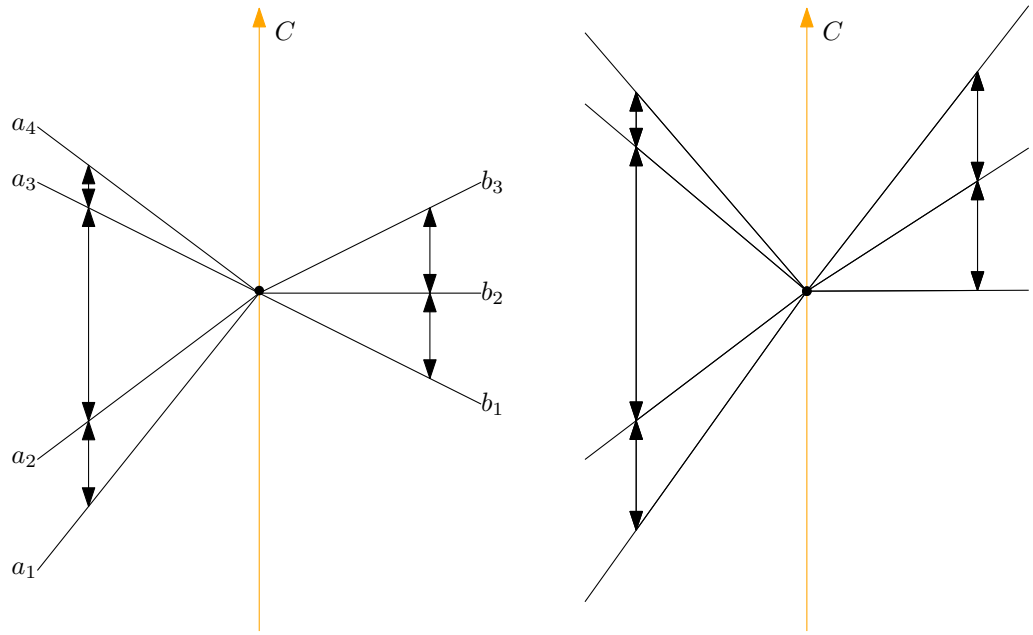

Figure 1: The degrees of freedom provided by the proportionality constraints

Double-counting of edge-face incidences leads to the relation

$$3f_3 + 4f_4 = 2m. \tag{6}$$

We have $d_v - 3$ for each of the n_0 vertices v on C, if it has degree d_v. For each of the $n - n_0$ vertices v not on C, we have $d_v - 2$ equations. The total number of equations is therefore

$$G = \sum_{v \in C}^{n} (d_v - 3) + \sum_{v \notin C}^{n} (d_v - 2) = \sum_{v \in V}^{n} (d_v - 2) - n_0 = 2m - 2n - n_0.$$

Using (4–6), this can be simplified to

$$\begin{aligned} G &= 2m - 2n - n_0 \\ &= 2m - 2n - 2f_3 - 2f_4 + 2f_3 + 2f_4 - n_0 \\ &= 2m - 2(n + f_3 + f_4) + \tfrac{1}{2}(4f_3 + 4f_4 - f_3) \\ &= 2m - 2(m + 2) + m = m - 4. \end{aligned}$$

To achieve the desired number of m equations, we have to add four more equations. If the outer face is a quadrilateral, we set the slopes of its 4 edges to fixed values. If the outer face is a triangle $\alpha\beta\gamma$, with γ on C, we set the slopes of the 3 boundary edges to fixed values. In addition, we pick another (non-boundary) edge incident to γ and set its slope to a fixed value. (Together with the proportionality constraints, this effectively pins all slopes incident to γ to fixed values.)

We call these four additional equations the *boundary equations*.

Altogether, we have now a system of m linear equations in the m unknowns $s = (s_1, \ldots, s_m)$, which we can write compactly as $A \cdot s = b$, with a square matrix A whose entries come from (1–3). Only four entries of the right-hand side vector b are non-zero, due to the four boundary equations. We will show that $A \cdot s = b$ has a unique solution and that this solution gives a Fáry embedding of Q.

3.1.1 Ordering constraints

Define a relation $\prec$ on $\{1, \ldots, m\}$ where $i \prec j$ if

1. $i < j$ and e_i and e_j are incident to a common vertex $v \in C^-$; or
2. $i > j$ and e_i and e_j are incident to a common vertex $v \in C^+$.

We say that a vector $s = (s_1, \ldots, s_m)$ *satisfies the ordering constraints* if $s_i < s_j$ for every pair $i, j \in \{1, \ldots, m\}$ such that $i \prec j$.

This definition captures the condition that vertices inside of C should be drawn to the left of the y-axis and those outside of C should be drawn to the right of the y-axis. It is straightforward to verify that $\prec$ is actually a acyclic: We know that a non-crossing drawing $\bar{D}$ with the vertices on the correct side exists, and the slopes s'_i of that drawing must satisfy the ordering constraints.

Lemma 1. *Any solution s to $A \cdot s = b$ that satisfies the ordering constraints yields a Fáry embedding of Q.*

Proof. If G is a plane embedding of a 2-connected graph, then a straight-line embedding G' of G is a Fáry embedding provided that two conditions are met: (i) For every vertex v, the cyclic order of the edges around v in G' is the same as in G; and (ii) every face of G is embedded without crossings in G' (Devillers, Liotta, Preparata, and Tamassia [3, Lemma 16]).

In our case, $G = Q$ and $G' = Q'$ is a straight-line embedding Q' of Q given by a solution to $A \cdot s = b$. For each vertex v that does not lie on C, the incident slopes satisfy the ordering constraints by assumption, and hence the order of incident edges in G' and G agrees.

Let us consider a vertex v on C, with incident edges $a_1, \ldots, a_k$ on the left and $b_1, \ldots, b_l$ on the right. If v is a boundary node, all slopes are fixed, and the cyclic order is therefore correct. Let us consider an interior vertex v. As discussed above, the proportionality constraints ensure that the cyclic order is either correct, or it is completely reversed on both sides. Let us assume for contradiction that the latter case happens:

$$s_{b_1} \geq s_{b_l} \text{ and } s_{a_k} \geq s_{a_1} \tag{7}$$

Let e be the third edge of the triangle with edges a_1 and b_1, and let f be the third edge of the triangle with edges a_k and b_l. Then the ordering constraint for the endpoints of e imply $s_{b_1} < s_e < s_{a_1}$, and the ordering constraint for the endpoints of f imply $s_{a_k} < s_f < s_{b_l}$. Together with (7), this leads to a contradiction.

For every quadrilateral face in Q', the vertices don't lie on C, and the ordering constraints on the vertices ensure that the embedding is non-crossing. [For a triangular face $\alpha\beta\gamma$, with γ on C, the ordering constraints on the vertices α and β ensure that the triangle does not degenerate.] Therefore, by the result of Devillers et al. cited above, Q' is a Fáry embedding. □

3.1.2 Strong Ordering Constraints

SAME AS SECTION 3.2.3

□

... UNTIL HERE CAN BE UNCHANGED.

It remains to rule out the possibility that $A_{t^*} \cdot s = b_{t^*}$ has no solutions because $\lim_{t \uparrow t^*} s(t)$ does not exist. Define the set $H = \{e_i \in \{e_1, \ldots, e_m\} : \lim_{t \uparrow t^*} s_i(t) \text{ exists}\}$. (The set H corresponds to edges of Q with bounded slope; the remaining edges have divergent slopes; they become vertical as $t \uparrow t^*$.)

Proposition 2. *The set H has the following properties: GIVE THESE PROPERTIES A NAME OR PUT THEM IN A LEMMA, SO WE CAN REFER TO THEM.*

1. *H contains the edges on the outer face.*
2. *If a vertex v that does not lie on C has two incident edges in H, then all its incident edges belong to H.*
3. *If a vertex v that lies on C has two incident edges in H on the same side of C, then all its incident edges belong to H.*
4. *If $i \prec j \prec k$ and $e_i, e_k \in H$, then $e_j \in H$.*

Let us see why properties 2 and 3 are true. If v does not lie on C and two incident edges have a convergent slope, this means that the location of v is fixed in the limit. By the concurrency equations, the slopes of the remaining incident edges are also determined, by the requirement that the edges go through the limit location of v.

If v lies on C, the argument is more elaborate. If v lies on C, then all incident edges have fixed slopes and are therefore in H. Let uus consider the case that v is an interior vertex. As above, defince the incident edges a_i and b_j. Let e be the third edge of the triangle with edges a_1 and b_1, and let f be the third edge of the triangle with edges a_k and b_l. Assume without loss of generality that two of the edges a_i on the left belong to H. Then, by the proportionality constraints, all left edges a_i belong to H, and moreover, the range $b_l - b_1$ of the right incident edges converges to a bounded limit. It follows that either all the right edges b_j converge, or they all diverge to $+\infty$, or they all diverge to $-\infty$, Then the ordering constraint for the endpoints of e imply $s_{b_1} < s_e < s_{a_1}$. THERE IS SOME REPETITIVENESS HERE. This is inconstent with $\lim s_{b_1} = +\infty$. The ordering constraint for the endpoints of f imply $s_{a_k} < s_f < s_{b_l}$. This is inconstent with $\lim s_{b_l} = -\infty$. Thus, the only possibility is that all incident slopes converge.

We have now established that the set H has the above four properties. Lemma 2 below shows that such a set H contains all edges. All slopes converge, and this completes the proof. □

Lemma 2. *(TAKES THE ROLE OF PREVIOUS LEMMA 5, now Lemma 7.) Let Q be a graph (a "near-A-graph"?) in which every edge is intersected by C, and each inner face is a triangle or quadrilateral, and each vertex on C has neighbors on the left and on the right. Let H be a subset of $E(Q)$ such that*

1. *If v is a vertex on the outer face of Q, then all incident edges belong to H;*
2. *If a vertex v does not lie on C and has two incident edges in H, then all its incident edges belong to H.*
3. *If a vertex v lies on C and has two incident edges in H on the same side of C, then all its incident edges belong to H.*
4. *if $i \prec j \prec k$ and $i, k \in H$, then $j \in H$.*

Then $H = E(Q)$.

In order to apply induction, this lemma applies to a more general class of graphs than we need, because if imposes no constraints on the outer face, and Assumption 1 is stronger than the corresponding property in Proposition 2 that we have established above.

Let us see why Assumption 1 is true: (DOES THIS ARGUMENT BELONG HERE?) Initially, a boundary vertex can lie on C as a vertex of a triangle, then all incident edges belong to H because their slopes are fixed, or it can lie on C as a reflex vertex of a quadrilateral, then there are two H-edges on the same side, or it can lie away from C, then again there are two incident H-edges. In all cases, we can conclude from properties 2 or 3 that all incident edges belong to H.

Proof. The proof is by induction on the lexicographically ordered pair $(f(Q), |E(Q)|)$, where $f(Q)$ is the number of inner faces of Q. More specifically, we will dismantle Q from outside while maintaining Conditions 1–4:

- If Q is not 2-connected but has more than one edge, we cut it into pieces with fewer edges.
- If Q is 2-connected, we will modify it and reduce it to a graph with fewer interior faces, keeping the number of edges fixed.

Eventually, we reduce to a graph with a single edge, and here the claim is trivial because the edge belongs to the boundary.

We refer to the edges of H simply as *H-edges*. The edges on the outer face are called boundary edges.

If Q is not connected then we can apply induction to each component of Q separately. If Q has a cut vertex v, whose removal separates Q into components $A_1, \ldots, A_r$ then, for each $i \in \{1, \ldots, r\}$, we can apply induction to the subgraph of Q induced by $V(A_i) \cup \{v\}$. In these reductions, no new boundary edges appear that were not previously boundary

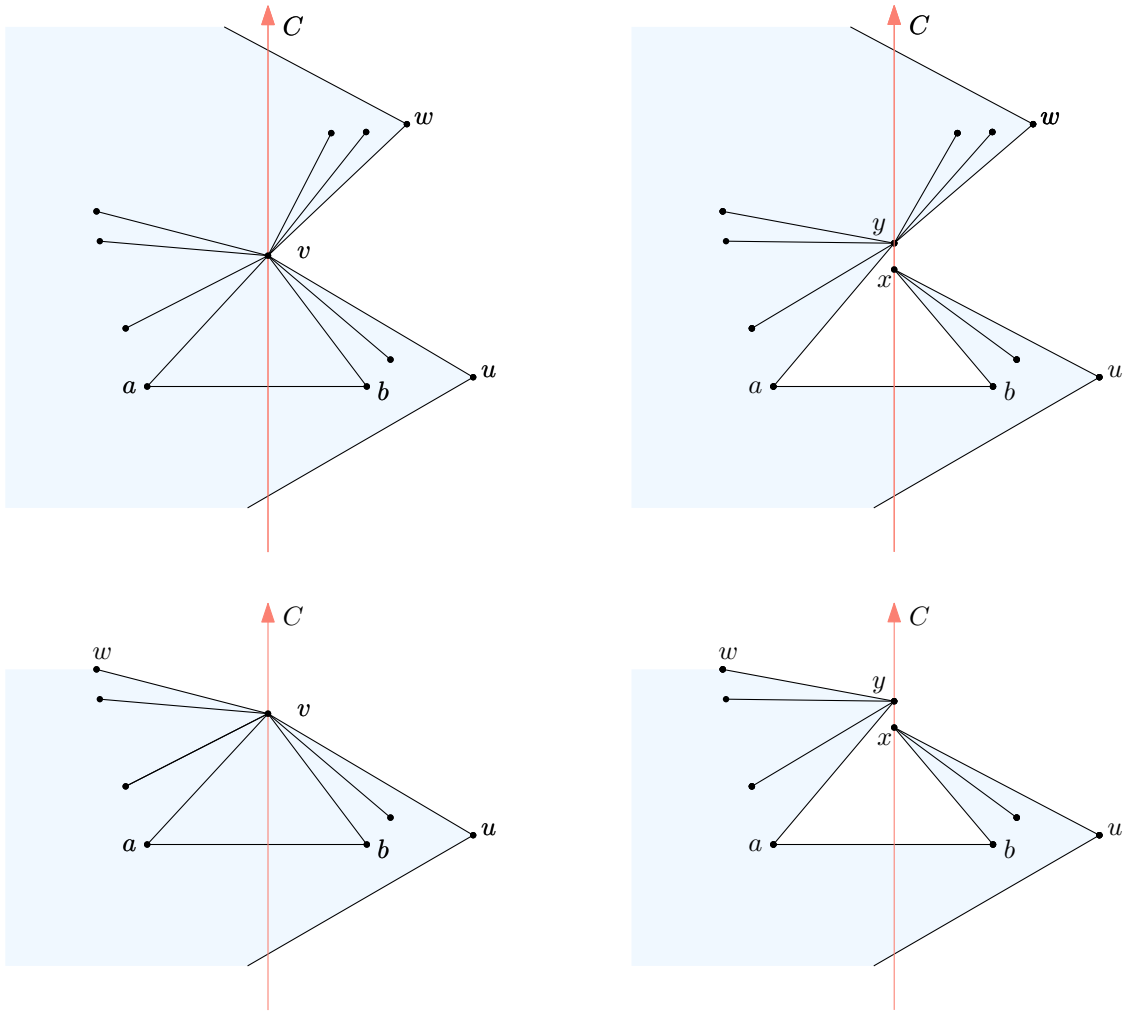

Figure 2: Proof of Lemma 2 for a vertex v on C. Integrating a triangle in the outer face.

edges, because each inner face is a quadrangle or a triangle: Q cannot contain a nested (2-connected) component inside another face. Some adjacent edges in Q might no longer be adjacent after we cut Q into pieces. This can make Conditions 2 and 3 only weaker when applied to the pieces. Thus, induction is justified.

We are left with the case that Q is a 2-connected *near-A-graph*(?) whose outer face is a simple cycle F.

Case 1. F contains a vertex v on C. Then we identify an interior triangle vab incident to v and open it up, merging it into the outer face. We illustrate the procedure for the case that ab lies below v, see Figure 2. Let u and w be the predecessor and successor of v on the counterclockwise cycle F, and assume without loss of generality that $u \in R$.

We construct a new graph Q' by splitting v into two vertices x and y that both lie on C, with y above x. We make x adjacent to u and to every neighbour of v between b and u. We make y adjacent to all remaining neighbours of v. Figure 2 shows that this procedure

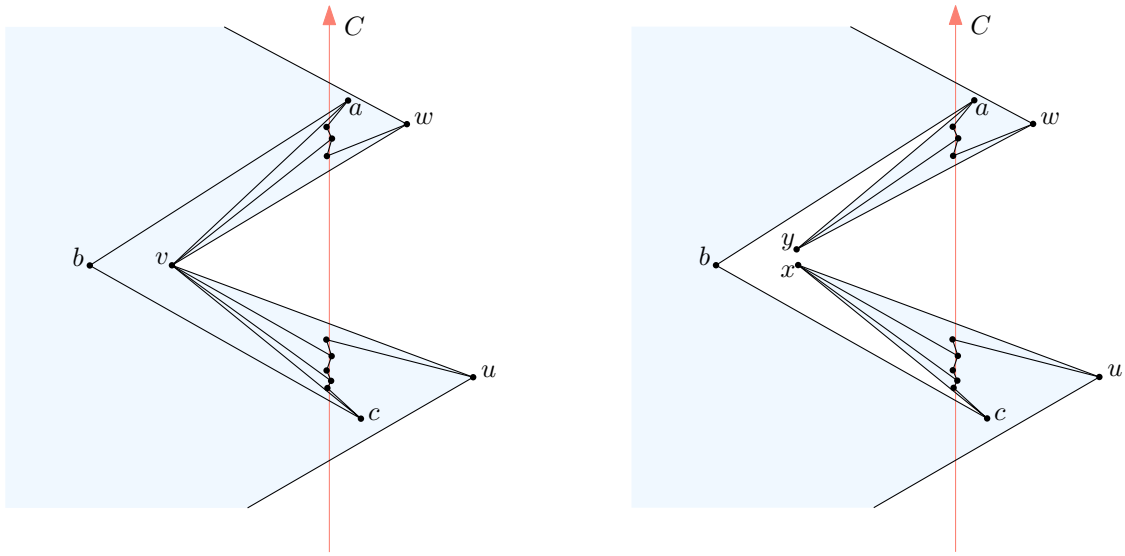

Figure 3: Proof of Lemma 2 for a reflex vertex v. Integrating a quadrilateral in the outer face.

works both for $w \in R$ and for $w \in L$.

In Q', the triangle vab has become part of the outer face, so Q' has one inner face less than Q, while having the same number of edges.

Case 2. F contains no vertex on C. Then F contains at least four vertices, and C intersects every edge of F. Therefore, F must contain three consecutive vertices u, v, w such that C exits an inner face through uv and enters an inner face through vw, see Figure 3. This implies that v is a reflex vertex of some bounded face $q = vabc$ of Q. Indeed, vc is the first edge incident to v crossed by C and va is the last such edge.

We construct a new graph Q' by splitting v into two vertices x and y. We make the vertex x adjacent to u and every neighbour z of v such C intersects vz before it intersects vu. We make y adjacent to all of v's neighbours that are not adjacent to x. In Q', q is part of the outer face, so Q' has one less inner face than Q, while having the same number of edges.

This finishes the description of how we modify Q into Q'. Every edge of Q' inherits its classification as an H-edge from its corresponding edge in Q. We have to show that Q' fulfills all assumptions. The only critical assumption is Assumption 1. All edges incident to the new vertices x or y were incident to v before, and thus they are H-edges.

In case of a triangle vab, we have two potential new vertices on the boundary, a and b, and they don't lie on C. We know that va and vb are H-edges, since they are incident to v. From the ordering constraints around a and b we get $va \prec ab \prec vb$ or $vb \prec ab \prec va$, and thus, by Assumption 4, $ab \in H$. Now we have two H-edges va and vb incident to a, and Assumption 2 allows us to conclude that all edges incident to a belong to H, and similarly for b.

Let us consider the other case, where we have a quadrilateral $q = vabc$. We have three potential new vertices on the boundary: a, b and c. We know that va and vb are H-edges, since they are incident to v.

As in the triangular case, $va, vc \in H$ by Condition 2. By looking at the vertices of q, we get $vc \prec bc \prec ba \prec va$ or $va \prec ba \prec bc \prec vc$, depending on whether $v \in C^-$ or $v \in C^+$. Thus, by Condition 4, bc and ba are also H-edges. The vertex b does not lie on C. The vertex a might lie on C or not, but if it does, then the two incident edges va and ab lie in the same half-plane. The same holds for d. Thus we can apply Assumption 2 or 3, as appropriate, to conclude that all edges incident to a, b and c belong to H.

In Q' some of the $\prec$-relations involving edges incident to v are missing, but no new ones are introduced, so Q' still satisifies Condition 4. The same argument applies to Conditions 2 and 3. Some adjacent edges in Q might no longer be adjacent in Q', but this makes Condition 2 and 3 only weaker. (REPETITION!)

We have justified the induction step for the case when Q is 2-connected, and the proof is complete. □

END OF NEW STUFF

3.2 Proper Curves

This section is devoted to proving the following result:

Theorem 4. *Let*

- *Q be a quadrangulation with outer face f;*
- *$C : [0,1] \to \mathbb{R}^2$ be a proper Jordan curve for Q that intersects every edge of Q;*
- *$e_1, \ldots, e_m$ be the edges of Q in the order they are intersected by C;*
- *$y_1 < \cdots < y_m$ be any increasing sequence of numbers; and*
- *Δ be a triangle that has no vertex on C and intersects the y-axis in the segment with endpoints $(0, y_1)$ and $(0, y_m)$.*

Then Q has a unique *Fáry embedding in which, for each $i \in \{1, \ldots, m\}$, the intersection of e_i with the y-axis is a single point $(0, y_i)$ and the edges e_1 and e_m are mapped to the two edges of Δ that intersect the y-axis.*

We will use the notations Q, f, C, $e_1, \ldots, e_m$, $y_1, \ldots, y_m$, and Δ that appear in the statement of Theorem 4 consistently throughout this section. Without loss of generality, we assume that Δ has two vertices α and β in L and one vertex γ in R, and that $\Delta = \alpha\beta\gamma$ is oriented counterclockwise, see Figure 4. I AM USING NOTATIONS L AND R HERE. NEED TO BE INTRODUCED, OR NOTATION ADAPTED. THERE IS DUPLICATION WITH LATER DISCUSSION OF DELTA A FEW PARAGRAPHS BELOW.

The requirement that the edges e_1 and e_m map to Δ fixes the embedding of the outer face f of Q. Indeed, the vertex of f common to e_1 and e_m will be mapped to γ, and the other two endpoints of e_1 and e_m will be mapped to β and α, respectively. The two remaining edges e_a and e_b of f are then fixed by the requirement that they have endpoints at α and β and intersect the y-axis in prescribed locations.

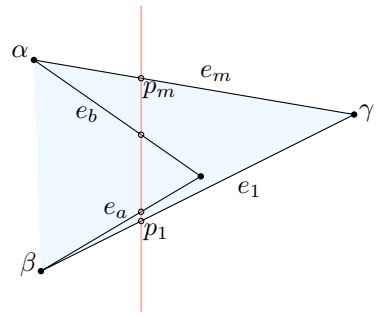

Figure 4: The triangle Δ fixes the embedding of the outer face of Q.

In the remainder of the proof, we will show that the unique embedding of the outer face f extends uniquely to the rest of the Q so that the requirements of Theorem 4 are fulfilled. We do this by describing a system of linear equations that any straight-line embedding that meets the requirements of Theorem 4 must satisfy. We then show that this system has a unique solution and that, from this solution, we can extract a Fáry embedding of Q that satisifies the requirements of Theorem 4. The proof will be somewhat indirect. By Theorem 2, we know that there is some straight-line drawing $\bar{D}$ NOTATION FOR DRAWING???? of Q whose edges intersect C in the right order but not necessarily at the right locations. We will then morph the drawing in order to move the intersection to the desired locations.

3.2.1 The Linear System $A \cdot s = b$ of Concurrency Constraints

We model this problem by a system of equations that has m variables $s_1, \ldots, s_m$ in which s_i is the slope of the edge e_i in the desired embedding, so that e_i lies on the line $\{(x,y) : y = s_i x + y_i\}$. Note that, since each vertex of Q has degree at least 2, a straight-line embedding of Q is completely determined by the values of $s_1, \ldots, s_m$. However, the values $s_1, \ldots, s_m$ must fulfill additional conditions in order to determine a plane embedding of Q: (i) all edges incident to a common vertex must meet at a common point. (ii) Moreover, the edges must not cross.

Without loss of generality (by reflection through the y-axis and uniform scaling of all quantities), assume that $\Delta = \alpha\beta\gamma$ has two vertices α and β to the left of the y-axis and the third vertex γ to the right of the y-axis and is contained in $[-1,1]^2$. The outer face, f, of Q has four edges e_1, e_a, e_b, and e_m, where $1 < a < b < m$. As discussed above, the slopes s_1, s_a, s_b, and s_m are completely determined Δ together with y_1, y_a, y_b, y_c. Conversely, Δ is determined by s_1, s_a, s_b, and s_m. We will thus forget Δ and choose the nonredundant daty $y_1, \ldots, y_m$ and s_1, s_a, s_b, s_m to describe the constraints that we have to fulfill.

For a triple of edges e_i, e_j, and e_k incident to the same vertex v, the three supporting lines of e_i, e_j, and e_k must meet at a common point (the location of v). Therefore the slopes $s = (s_1, \ldots, s_m)$ must satisfy the following *concurrency constraint*:

$$\begin{vmatrix} 1 & 1 & 1 \\ s_i & s_j & s_k \\ y_i & y_j & y_k \end{vmatrix} = (y_j - y_k)s_i + (y_k - y_i)s_j + (y_i - y_j)s_k = 0 \tag{8}$$

Since $y_1, \ldots, y_m$ are given, this is a linear equation in $s_1, \ldots, s_m$. Writing this equation for all triplets of edges incident to a common vertex will include many redundant equations. If d_v edges meet in a vertex v, It suffices to take $d_v - 2$ equations: We choose two fixed incident edges e_i and e_j and run e_k through the remaining $d-2$ edges, specifying that e_k should go through the common vertex of e_i and e_j. The total number of equations is therefore

$$\sum_{v=1}^{n} (d_v - 2) = 2m - 2n = m - 4, \tag{9}$$

using the relation $m = 2n - 4$ for quadrangulations, which follows from Euler's formula. We have four more equations for the specified slopes s_1, s_a, s_b, s_m.

This yields a system of m equations in the m unknowns $s = (s_1, \ldots, s_m)$, which we can write as $A \cdot s = b$, with a square matrix A whose entries come from (8). Only four entries of the right-hand side vector b are non-zero because the four slopes s_1, s_a, s_b, and s_m are fixed. We will show that $A \cdot s = b$ has a unique solution and that this solution gives a Fáry embedding of Q.

It is clear that any solution s to $A \cdot s = b$ determines a straight-line embedding of Q that satisfies the conditions of the the theorem, but it is not clear that it determines a Fáry embedding of Q. In particular, it could give an embedding in which edges cross each other. As a first step, we impose some ordering constraints.

3.2.2 Ordering constraints

Define a relation $\prec$ on $\{1, \ldots, m\}$ where $i \prec j$ if

1. $i < j$ and e_i and e_j are incident to a common vertex $v \in C^-$; or
2. $i > j$ and e_i and e_j are incident to a common vertex $v \in C^+$.

We say that a vector $s = (s_1, \ldots, s_m)$ *satisfies the ordering constraints* if $s_i < s_j$ for every pair $i, j \in \{1, \ldots, m\}$ such that $i \prec j$.

This definition captures the condition that vertices inside of C should be drawn to the left of the y-axis and those outside of C should be drawn to the right of the y-axis. It is straightforward to verify that $\prec$ is actually a acyclic: We know that a non-crossing drawing $\bar{D}$ with the vertices on the correct side exists, and the slopes s'_i of that drawing must satisfy the ordering constraints.

Lemma 3. *Any solution s to $A \cdot s = b$ that satisfies the ordering constraints yields a Fáry embedding of Q.*

Proof. Devillers et al. [3, Lemma 16] show that, if G is a plane embedding of a 2-connected graph and G' is a straight-line embedding of G in which the cyclic order of the edges around every vertex in G' is the same as the cyclic order of the edges around every vertex in G and every face of G has a non-crossing embedding in G', then G' is a Fáry embedding.

In our case, $G = Q$ and $G' = Q'$ is a straight-line embedding Q' of Q given by a solution to $A \cdot s = b$ that satisifes $\prec$. Since every edge of Q intersects C and the order of

$y_1, \ldots, y_m$ is the same as the order in which $e_1, \ldots, e_m$ intersect C, the ordering of the edges around each vertex in Q' is the same as in the embedding of Q.

For every quadrilateral face in Q', the ordering constraints ensure that the embedding is non-crossing. Therefore, by the result cited above, Q' is a Fáry embedding. □

3.2.3 Strong Ordering Constraints

For $\epsilon \geq 0$, we say that $s = (s_1, \ldots, s_m)$ satisfies the *ϵ-strong ordering constraints* if, for each $i, j \in \{1, \ldots, m\}$ such that $i \prec j$, the inequality $s_j - s_i \geq \epsilon$ holds. Clearly, the ϵ-strong ordering constraints imply the ordering constraints. The following lemma shows that the converse holds when the equations are satisfied:

Lemma 4. *Any solution s to $A \cdot s = b$ that satisifies the ordering constraints also satisfies the ϵ-strong ordering constraints for all $\epsilon \leq \min\{|y_i - y_j| : 1 \leq i < j \leq m\}$.*

Proof. Lemma 3 implies that every vertex is contained in the outer face of the embedding, which in turn is contained in $\Delta \subset [-1, 1]^2$. In particular, every x-coordinate is in the interval $[-1, 1]$. The vertex incident to e_i and e_j has x-coordinate $(y_j - y_i)/(s_j - s_i)$. From $|(y_j - y_i)/(s_j - s_i)| \leq 1$ we derive $|s_j - s_i| \geq |y_j - y_i| \geq \epsilon$. □

3.2.4 Uniqueness of solutions satisfying $\prec$

The utility of the ϵ-strong ordering constraints is that they allow us to appeal to continuity. If is impossible to violate the ordering constraints without first violating the ϵ-strong ordering constraints. But since the ordering constraints imply the ϵ-strong ordering constraints, it is not possible to violate the ordering constraints at all. An example of this argument will be seen in the following proof.

Lemma 5. *If s is a solution to $A \cdot s = b$ that satisfies the ordering constraints, then s is the unique solution to $A \cdot s = b$.*

Proof. Suppose for contradiction that there is a solution s to $A \cdot s = b$ that satisifies the ordering constraints, but is not unique. Since $A \cdot s = b$ is a linear system, there is an entire (at least) 1-parameter family of solutions, i.e., there is a non-zero m-vector r such that, for every $\lambda \in \mathbb{R}$, $A(s + \lambda r) = b$.

Define the continuous (in fact, piecewise linear) function

$$f(\lambda) := \min\{(s_j + \lambda r_j) - (s_i + \lambda r_i) : i \prec j\},$$

and let λ^* be the value with the smallest absolute value $|\lambda^*|$ such that $f(\lambda^*) \leq \epsilon/2$. Such a value λ^* exists for the following reason: The vector $r = (r_1, \ldots, r_m)$ has at least four zero entries $r_1 = r_a = r_b = r_m = 0$ since the slopes s_1, s_a, s_b, and s_m are fixed. Since Q is connected, this implies that there is at least one vertex v with two incident edges e_k and e_ℓ such that $r_k = 0$ and $r_\ell \neq 0$. We can thus make $(s_\ell + \lambda r_\ell) - (s_k + \lambda r_k) = 0$, and then $f(\lambda) \leq 0$.

Now we know that, for λ between 0 and λ^*, the differences $s_j - s_i$ for $i \prec j$ do not change sign. It follows that the slopes satisfy the ordering constraints throughout this interval, and Lemma 4 implies that $f(\lambda^*) \geq \epsilon$, a contradiction. □

The proof of Lemma 5 was quite explicit (perhaps overly so) in showing the discontinuity caused by the ϵ-strong ordering constraints. In subsequent arguments we will not be quite so explicit.

3.2.5 A Parametric Family of Linear Systems

Note that A and b are functions of $y = (y_1, \ldots, y_m)$ and the triangle Δ. As discussed already, Δ, y_1, y_a, y_b, and y_m uniquely determine the slopes $h = (s_1, s_a, s_b, s_m)$. We make this explicit, by writing $A_1 = A(y,h)$ and $b_1 = b(y,h)$. Theorem 2 implies that there is some straight-line drawing D' of Q and some $y'_1 < \cdots < y'_m$ such that, for each $i \in \{1, \ldots, m\}$, e_i intersects the y-axis in exactly one point $(0, y'_i)$. DUPLICATION WITH ABOVE? Again, without loss of generality, we assume that $\Delta' \subset [-1,1]^2$ and that Δ' has two vertices on the left of the y-axis and one vertex on the right.

Thus far, we have established that there exists $y' = (y'_1, \ldots, y'_m)$ and $h' = (s'_1, s'_a, s'_b, s'_m)$ such that the system $A(y',h') \cdot s' = b(y',h')$ has at least one solution $s' = (s'_1, \ldots, s'_m)$. We now define a continuous family of linear systems that interpolates between the systems $A(y',h') \cdot s = b(y',h')$ and $A(y,h) \cdot s = b(y,h)$.

For all $0 \le t \le 1$ and each $i \in \{1, a, b, m\}$, let $s_i(t) = (1-t)s'_i + ts_i$ and let $h(t) = (s_1(t), s_a(t), s_b(t), s_m(t))$. Observe that

$$s_a(t) - s_1(t) = (1-t)(s'_a - s'_1) + t(s_a - s_1) > 0 \ ,$$

and the same is true for $s_1(t) - s_m(t)$ and $s_m(t) - s_b(t)$. Let

$$\epsilon_1 = \min_{0 \le t \le 1} \min\{s_a(t) - s_1(t), s_1(t) - s_m(t), s_m(t) - s_b(t)\}$$

and observe that $\epsilon_1 > 0$.

For all $0 \le t \le 1$ and each $i \in \{1, \ldots, m\}$, define $y_i(t) = (1-t)y'_i + ty_i$ and define $y(t) = (y_1(t), \ldots, y_m(t))$. Observe that, for any $1 \le i < j \le m$ and any $0 \le t \le 1$,

$$y_j(t) - y_i(t) = (1-t)(y'_j - y'_i) + t(y_j - y_i) > 0 \ .$$

Let

$$\epsilon_2 = \min_{0 \le t \le 1} \min\{y_j(t) - y_i(t) : 1 \le i < j \le m\}$$

and observe that $\epsilon_2 > 0$.

The entries in A_t and b_t are derived from (8), and each entry is a linear function of t.

Consider the unique quadrilateral $q(t)$ whose edges cross the y-axis at $y_1(t)$, $y_a(t)$, $y_b(t)$, $y_m(t)$ and have slopes $s_1(t)$, $s_a(t)$, $s_b(t)$, and $s_m(t)$, respectively. Note that $q(t) \subset [-1/\epsilon_1, 1/\epsilon_1] \times [-\infty, \infty]$. Therefore, after scaling x-coordinates by $1/\epsilon_1$, Lemma 4 applies to $A_t \cdot s = b_t$, so any solution s that satisfies $\prec$ also satisifies the ϵ^*-strong ordering constraints, for $\epsilon^* = \epsilon_1 \cdot \epsilon_2$.

3.2.6 Existence (and uniqueness) of solutions to $A_t \cdot s = b_t$

Lemma 6. *For every $0 \le t \le 1$, the system $A_t \cdot s = b_t$ has a unique solution, and this solution satisfies the ordering constraints.*

Proof. Recall that, since A_t is an $m \times m$ matrix, the system $A_t \cdot s = b_t$ has a unique solution s if and only if $\det A_t \neq 0$. When $\det A_t = 0$, the system may have no solutions or multiple solutions. When $\det A_t \neq 0$, Cramer's rule states that the solution s is given by $s(t) = (s_1(t), \ldots, s_m(t))$ where, for each $i \in \{1, \ldots, m\}$,

$$s_i(t) = \frac{\det A_t^i}{\det A_t} \ ,$$

and A_t^i denotes the matrix A_t with its ith column replaced by b_t. The numerators $\det A_t^i$ and the common denominator $\det A_t$ are polynomials in t, and therefore continuous functions of t. The solution $s(t) = (s_1(t), \ldots, s_m(t))$ depends continuously on t as long as $\det A_t \neq 0$.

We have already established that $A_0 \cdot s = b_0$ has a solution $s = s'$ that satisfies the ordering constraints. Therefore, by Lemma 5, this solution is unique, so $\det A_0 \neq 0$.

Let t^* be the smallest $t > 0$ for which $\det A_t = 0$. If such a value does not exist we set $t^* = \infty$.

First we argue that for all t in the interval $0 \le t < \min\{1, t^*\}$, the unique solution to $A_t \cdot s = b_t$ satisfies the ordering constraints. We can establish this by an argument similar to the one which shows the uniqueness of s'. Since $s(t)$ depends continuously on t, it would first have to violate the ϵ^*-strong ordering constraints before violating the ordering constraints, but this contradicts Lemma 4.

Thus, if $t^* > 1$, we are done. Let us therefore assume that $0 < t^* \le 1$ and derive a contradiction. We let t approach t^* from the left, and we ask whether the limit $s^* = \lim_{t \uparrow t^*} s(t)$ exists. Each function $s_i(t)$ is a quotient of two polynomials. Thus, for $t \to t^*$ it can either converge to $s_i(t^*)$ in a continuous way, or it diverges to $+\infty$, or it diverges to $-\infty$.

All solutions $s(t)$ for $t < t^*$ fulfill the equations and the ϵ^*-strong ordering constraints. Hence, if the limit exists, by continuity, it also fulfills the system $A_{t^*} \cdot s^* = b_{t^*}$ and the ϵ^*-strong ordering constraints. By Lemma 5, the solution s^* is the unique solution of $A_{t^*} \cdot s^* = b_{t^*}$, but this contradicts the assumption $\det A_{t^*} = 0$.

It remains to rule out the possibility that $A_{t^*} \cdot s = b_{t^*}$ has no solutions because $\lim_{t \uparrow t^*} s(t)$ does not exist. Define the set $H = \{e_i \in \{e_1, \ldots, e_m\} : \lim_{t \uparrow t^*} s_i(t) \text{ exists}\}$. (The set H corresponds to edges of Q with bounded slope; the remaining edges have divergent slopes; they become vertical as $t \uparrow t^*$.) The set H has he following properties:

1. H contains the four edges e_1, e_m, e_a and e_b on the outer face.
2. If $e_i, e_k \in H$ and e_i and e_k are incident to a common vertex v then $e_j \in H$ for all edges e_j incident to v.
3. If $i \prec j \prec k$ and $e_i, e_k \in H$, then $e_j \in H$.

Lemma 7 below shows that in any such partition, the set H contains all edges. All slopes converge, and this completes the proof. □

Condition 1 in the following lemma is more general that what we need, because it allows us to proceed by induction.

Lemma 7. *Let Q be a graph in which each inner face is a quadrilateral. Let H be a subset of $E(Q)$ such that*

1. *H contains all edges on the outer face of Q;*
2. *if $e_i, e_k \in H$ and e_i and e_k are incident to a common vertex v then every edge of Q incident to v is in H; and*
3. *if $i \prec j \prec k$ and $e_i, e_k \in H$, then $e_j \in H$.*

Then $H = E(Q)$.

Proof. The proof is by induction on the lexicographically-ordered pair $(f(Q), |E(Q)|)$, where $f(Q)$ is the number of inner faces of Q. More specifically, We will dismantle Q from outside while maintaining Conditions 1–3:

- If Q is not 2-connected but has more than one edge, we cut it into pieces with fewer edges.
- If Q is 2-connected, we will modify it and reduce it to a graph with fewer interior faces, keeping the number of edges fixed.

Eventually, we reduce to a graph with a single edge, and here the claim is trivial because the edge belongs to the boundary.

We refer to the edges of H simply as *H-edges*. The edges on the outer face are called boundary edges.

If Q is not connected then we can apply induction to each component of Q separately. If Q has a cut vertex v, whose removal separates Q into components $A_1, \ldots, A_r$ then, for each $i \in \{1, \ldots, r\}$, we can apply induction on the subgraph of Q induced by $V(A_i) \cup \{v\}$. In these reductions, no new boundary edges appear that were not previously boundary edges, because we assumed that each inner face is a quadrangle: Q cannot contain nested a (2-connected) component inside another face. Some adjacent edges in Q might no longer be adjacent after we cut Q into pieces. This can make Condition 2 only weaker when applied to the pieces. Thus, induction is justified.

We are left with the case that Q is a 2-connected *near-quadrangulation* whose outer face is a simple cycle F, see Figure 5. F contains at least four vertices, and C intersects every edge of F. Therefore, F must contain three consecutive vertices u, v, w such that C exits an inner face through uv and enters an inner face through vw. This implies that v is a reflex vertex of some bounded face $q = vabc$ of Q. Indeed, vc is the first edge incident to v crossed by C and va is the last edge incident to v crossed by C.

We construct a new graph Q' by splitting u into two vertices x and y. We make the vertex x adjacent to u and every neighbour z of v such C intersects vz before it intersects

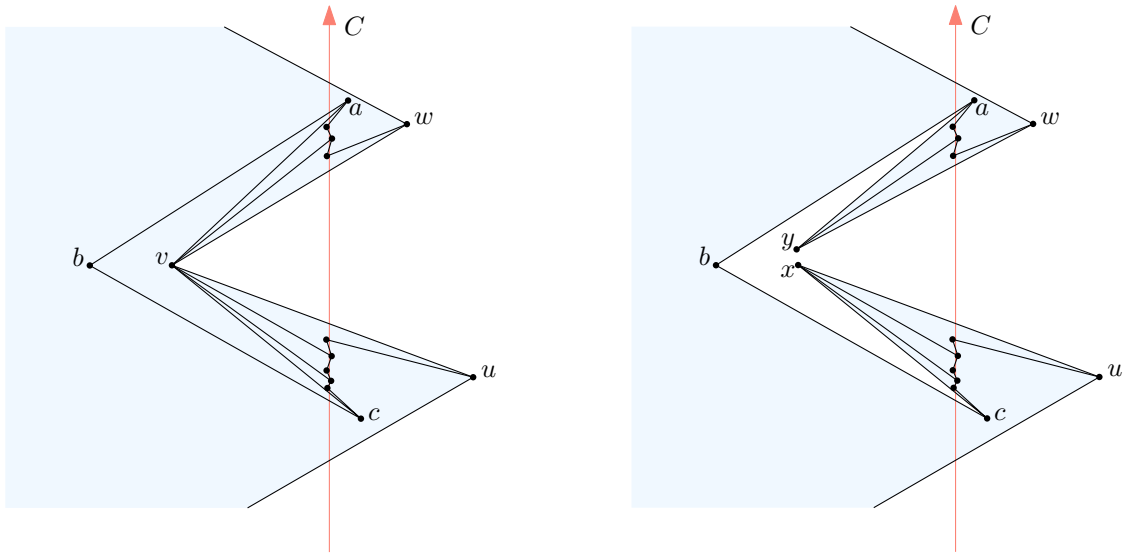

Figure 5: The proof of Lemma 7.

vu. We make y adjacent to all of v's neighbours that are not adjacent to x. In Q', q is part of the outer face, so Q' has one less inner face than Q, while having the same number of edges.

We have to show that the edges of the quadrilateral $q = vabc$, which become boundary edges of Q', are H-edges. The reflex vertex v is incident to two H-edges, namely those of F, and therefore, by Condition 2, $va, vc \in H$. By looking at the vertices of q, we get $vc \prec bc \prec ba \prec va$ or $va \prec ba \prec bc \prec vc$, depending on whether $v \in C^-$ or $v \in C^+$. Thus, by Condition 3, bc and ba are also H-edges.

Every edge of Q' inherits its classification as an H-edge from its corresponding edge in Q. In Q' some of the $\prec$ relations involving edges incident to v are missing, but no new ones are introduced, so Q' still satisifies Condition 3. The same argument applies to Condition 2. Some adjacent edges in Q might no longer be adjacent in Q', but this makes Condition 2 only weaker. (REPETITION!)

By Conditions 1 and 2, all edges incident to v are H-edges and v is a reflex vertex of q. Therefore all edges of q are H-edges. We have justified the induction step for the case when Q is 2-connected, and the proof is complete. □

This completes the proof of Theorem 4. We have actually shown something stronger: for any $y'_1 < \cdots < y'_m$ and any $y_1 < \cdots < y_m$, there is a continuous morph between a drawing Q' in which each edge e_i crosses the y-axis at y'_i and a drawing Q in which each edge e_i crosses the y-axis at y_i. At any stage in this morph, all edges cross the y-axis and, for each edge e_i, the crossing point between e_i and the y-axis moves linearly from y'_i to y_i.

Let us retrace the essential steps of our proof:

- Setting up a linear system $As = b$ that, together with some constraints on the order

of variables, characterizes the drawings that we want (Lemma 3).

- IT LOOKS STRANGE THAT THE ITEM BULLETS ARE LESS INDENTED THAN THE PARAGRAPHS.
- A continuity argument, starting from an embedding with intersection points at arbitrary locations y_i, and moving them to the desired locations.
- The notion of strong ordering constraints, which allowed us to conclude that the ordering constraints cannot become violated if the solution s changes continuously (Lemma 4).

It was crucial to have a *square* coefficient matrix A in the first step, because this allowed us to single out a unique solition when $\det A \neq 0$ and to exclude the option of having a unique solution when $\det A = 0$. ...

Before moving on, we also note that, for every quadrangulation Q, there exists a proper Jordan curve C for Q that intersects every edge of Q. This follows from the fact that the dual of Q is 4-regular and therefore Eulerian, along with a standard uncrossing argument. This immediately yields the following corollary of Theorem 4.

Corollary 1. *For every m-edge quadrangulation Q and every $y_1 < \cdots < y_m$, there exits a Fáry embedding of Q in which no edge is vertical and, for each $i \in \{1,\ldots,m\}$, the embedding has an edge that intersects the y-axis at $(0, y_i)$.*

3.3 From Quadrangulations to Collinear Sets

To show that a collinear set in a triangulation T is free, we will reduce T to a graph Q^* that is not quite a quadrangulation. However, Q^* can be made into a quadrangulation Q satisfying the requirements of Theorem 4 by splitting each vertex on C into a short edge. The purpose of this section is to show that, given the drawing of Q from Theorem 4, this splitting can be undone by contracting these split edges so that each split edge again becomes a vertex that is placed at the appropriate place on the y-axis. We begin with a geometric lemma:

Lemma 8. *Let $abcd \subset [-1,1]^2$ be a quadrilateral whose edges $e_1 = ab$, $e_2 = bc$, $e_3 = cd$ and $e_4 = da$ intersect the y-axis at $y_1 < y_2 < y_3 < y_4$, and define $\epsilon = y_3 - y_2$ and $g = y_4 - y_3$. Then the the x-coordinate of c has absolute value at most ϵ/g and the distance between c and $(0, y_2)$ is at most $\sqrt{5}\epsilon/g$.*

Proof. Refer to Figure 6. Without loss of generality assume a and c are the to left of the y-axis and b and d are to the right of the y-axis. Define r and q so that $c = (-r, y_2 - q)$ so that we want to prove $r \leq \epsilon/g$ and $\sqrt{r^2 + q^2} \leq \sqrt{5}\epsilon/g$.

For each $i \in \{1,\ldots,4\}$, let s_i denote the slope of e_i. Then $s_2 = q/r$, $s_3 = (q+\epsilon)/r =$

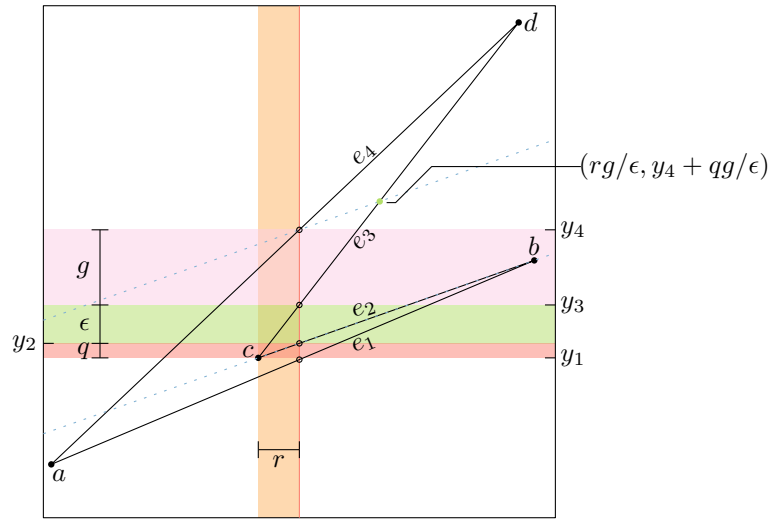

Figure 6: The proof of Lemma 8.

$s_2 + \epsilon/r$. The x-coordinate of d is

$$\begin{aligned} d_0 &= \frac{g}{s_3 - s_4} \\ &> \frac{g}{s_3 - s_1} && \text{(since } s_4 > s_1\text{)} \\ &> \frac{g}{s_3 - s_2} && \text{(since } s_1 > s_2\text{)} \\ &= \frac{rg}{\epsilon} \ . \end{aligned}$$

But, since $abcd \subset [-1,1]^2$, $1 \geq d_0 > rg/\epsilon$. Rewriting this gives $r < \epsilon/g$.

The y-coordinate of d is

$$\begin{aligned} d_1 &= y_4 + d_0 s_4 \\ &> y_4 + d_0 s_2 && \text{(since } s_4 > s_1 > s_2\text{)} \\ &= y_4 + d_0 \cdot \frac{q}{r} && \text{(since } s_2 = q/r\text{)} \\ &> y_4 + \frac{rg}{\epsilon} \cdot \frac{q}{r} && \text{(since } d_0 > rg/\epsilon\text{)} \\ &= y_4 + \frac{gq}{\epsilon} \\ &> -1 + \frac{gq}{\epsilon} \ . \end{aligned}$$

Again $1 \geq d_1 > -1 + \frac{gq}{\epsilon}$ and rewriting this gives $q < 2\epsilon/g$. Therefore $\sqrt{r^2 + q^2} \leq \sqrt{5}\epsilon/g$. □

Let Q be a quadrangulation satisfying the preconditions of Theorem 4. Then we say an edge xy is a *split edge* of Q (with respect to C) if the minimal subcurve of C that

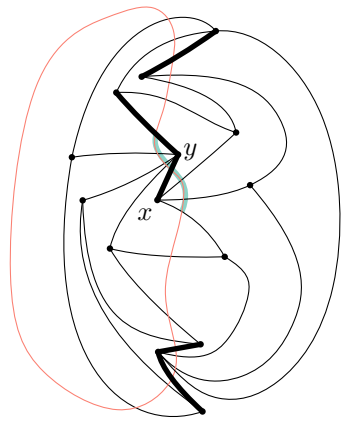

Figure 7: A split edge xy in a quadrangulation. All split edges are shown in bold and the subcurve of C that proves xy is a split edge is highlighted

intersects all edges of Q incident to x or y does not intersect any other edges of Q. (See Figure 7.)

Corollary 2. *Let Q, C, $e_1,\dots,e_m$, $y_1,\dots,y_m$, and Δ be as in Theorem 4. Let xy be a split edge of Q with respect to C, let $I = \{i : e_i$ is incident to x or $y\}$, let $\epsilon = \max\{|y_i - y_j| : i,j \in I, i \neq j\}$, and let $g = \min\{|y_i - y_j| : i \in I, j \in \{1,\dots,m\} \setminus I\}$. Then, in the drawing of Q produced by Theorem 4, the absolute value of x and y's x-coordinates is at most ϵ/g and the distance between x and y is at most $2\sqrt{5}\epsilon/g$.*

Proof. The edge xy is incident to two quadrilaterals. Applying Lemma 8 to one of these establishes the distance bound for x and applying Lemma 8 to the other establishes the distance bound for y. □

A set S of split edges in Q is *independent* if there is no edge in Q that joins the endpoints of two distinct edges in S. Given an independent set S of split edges, we define the graph Q_S by contracting each edge xy in S and placing the resulting vertex at the intersection of C and xy. Note that, since S is independent, each edge of Q_S intersects C in exactly one point (though it may be an endpoint).

We need a generalization of Theorem 4 that allows us to prescribe the y-coordinates of edges and vertices of Q_S intersected by C. This results in an annoying case distinction that occurs when C contains a vertex on the outer face of Q_S (because S contains an edge of the outer face of Q). To deal with this, we need some restrictions on the triangle Δ. We say that a triangle $\Delta = \alpha\beta\gamma$ is *compatible* with Q, C, S and $y_1,\dots,y_m$ if

1. $\beta = (0, y_1)$ if $e_1 \in S$, otherwise $(0, y_1)$ is in the interior of the edge $\beta\gamma$; and
2. $\alpha = (0, y_m)$ if $e_m \in S$, otherwise $(0, y_m)$ is in the interior of the edge $\alpha\gamma$.

Theorem 5. *Let Q, C, $e_1,\dots,e_m$, $y_1,\dots,y_m$ be as in Theorem 4, let S be an independent set of split edges in Q, and let Δ be a triangle compatible with Q, C, S, and $y_1,\dots,y_m$. Then Q has a Fáry embedding in which, for each $i \in \{1,\dots,m\}$, the intersection of e_i with the y-axis is*

1. $(0, y_i)$ *if* e_i *does not share a vertex with any edge in* S*; or*
2. $(0, y_j)$ *if* e_i *shares an endpoint with* $e_j \in S$*.*

Proof. This proof is another continuity argument. For any $\epsilon \geq 0$, we define $y(\epsilon) = (y_1(\epsilon), \ldots, y_m(\epsilon))$ as follows:

1. $y_i(\epsilon) = y_i$ if e_i is not incident to a split edge.
2. For each split edge $e_s = xy$, we set $e_s = y_s$. Assume, without loss of generality, that x's incident edges $e_{s+1}, \ldots, e_{s+d}$ cross C after e_s. Then we set $y_{s+\ell}(\epsilon) = y_s + \epsilon\ell/d$, for each $\ell \in \{1, \ldots, d\}$. Similarly, if y has neighbours $e_{s-1}, \ldots, e_{s-r}$, we set each $y_{s-\ell}(\epsilon) = y_i - \epsilon\ell/r$.

In this way, the edges incident to x have $y(\epsilon)$ values evenly spaced in the interval $[y_s, y_s + \epsilon]$ and edges incident y have $y(\epsilon)$ values evently spaced in $[y_s - \epsilon, y_s]$.

For all sufficiently small $\epsilon > 0$, Theorem 4 ensures that Q has a straight-line drawing Q_ϵ in which e_i crosses the y-axis at $y_i(\epsilon)$. We use $s_i(\epsilon)$ to denote the slope of e_i in Q_ϵ. The drawing Q_ϵ changes continuously with ϵ so we can ask if $\lim_{\epsilon \downarrow 0} Q_\epsilon$ exists and, if it does, does it define the straight-line embedding of Q_S that we want? This answer to both questions is yes. To establish this, we first show that there is a $\delta > 0$ such that Q_ϵ satisfies the δ-strong ordering constraint for every sufficiently small $\epsilon > 0$.

Let $g = \min\{|y_i - y_j| : i, j \in \{1, \ldots, m\}, i \neq j\}$ and observe that $g > 0$ and does not depend on ϵ. There are two cases to consider:

1. If two edges e_i and e_j are incident to a common vertex x that is not the endpoint of an edge in S, then in Q_ϵ, e_i crosses the y-axis at $y_i(\epsilon) = y_i \pm \epsilon$ and e_j crosses at $y_j(\epsilon) = y_j \pm \epsilon$, so $|s_i(\epsilon) - s_j(\epsilon)| \geq |y_i - y_j| - 2\epsilon \geq g - 2\epsilon > g/2$ for all $\epsilon < g/4$.
2. On the other hand, if $xy = e_s \in S$ and e_i and e_j are both incident to x, then $|y_i(\epsilon) - y_j(\epsilon)| \geq \epsilon/\deg(x) > \epsilon/n$. However, in this case, Corollary 2 ensures that the x-coordinate of x is at most ϵ/g. But this means that

$$|s_i(\epsilon) - s_j(\epsilon)|(\epsilon/g) \geq |y_i(\epsilon) - y_j(\epsilon)| \geq \epsilon/n \ .$$

   Rewriting this gives $|s_i(\epsilon) - s_j(\epsilon)| > g/n$.

Therefore, for all $0 < \epsilon \leq g/4$, Q_ϵ satisifies the g/n-strong ordering constraint.

At this point, we are done. The same argument used to exclude events of Type 3 in the proof of Lemma 6 shows that, for each $i \in \{1, \ldots, m\}$, $\lim_{\epsilon \downarrow 0} s_i(\epsilon)$ exists, so $s(0) = \lim_{\epsilon \downarrow 0} s(\epsilon)$ exists. Furthermore, for all sufficiently small $\epsilon > 0$, Q_ϵ satisfies the δ-strong ordering constraints and therefore $s(0)$ satisfies the ordering constraints and determines a Fáry embedding Q_0 of Q_S that fulfills the conditions of the theorem. □

4 Triangulations

In this section we prove that every collinear set is free. We will sometimes make use of this simple fact:

Observation 1. *If $q = abcd$ is a simple quadrilateral, then neither of the segments ac or bd cross any of the edges of q.*

As is the case with Theorem 5 there is an annoying case distinction that occurs when C contains vertices on the outer face. Let T be a triangulation and let $r_1, \ldots, r_k$ be sequence of vertices and edges in T, and let $y_1 < \cdots < y_k$ be a sequence of numbers. We say that a triangle $\Delta = \alpha\beta\gamma$ is *compatible* with $r_1, \ldots, r_m$ and $y_1, \ldots, y_m$ if

1. $\beta = (0, y_1)$ if r_1 is a vertex, otherwise $(0, y_1)$ in the interior of the edge $\beta\gamma$; and
2. $\alpha = (0, y_m)$ if r_m is a vertex, otherwise $(0, y_m)$ in the interior of the edge $\alpha\gamma$.

We are now ready to state our main theorem.

Theorem 6. *Let*

1. *T be a triangulation with outer face f;*
2. *$C : [0,1] \to \mathbb{R}^2$ be an admissible Jordan curve for T;*
3. *$r_1, \ldots, r_k$ be the sequence of vertices and open edges of T that are intersected by C, in the order that they are intersected by C;*
4. *$y_1 < \cdots < y_k$ be any sequence of numbers; and*
5. *Δ be a triangle that is compatible with $r_1, \ldots, r_m$ and $y_1, \ldots, y_m$.*

Then, for any $\epsilon > 0$, T has a Fáry embedding in which the outer face f is Δ and, for each $i \in \{1, \ldots, k\}$,

1. *if r_i is a vertex, then r_i is drawn on the y-axis, with y-coordinate y_i;*
2. *if r_i is an edge contained in C, then r_i is drawn so that it is contained in the y-axis; or*
3. *(r_i is an edge whose intersection with C is a single point) the intersection of r_i with the y-axis has a y-coordinate in the interval $[y_i - \epsilon, y_i + \epsilon]$.*

Proof. We call y_i the (desired) *crossing coordinate* for r_i. If a Fáry embedding contains an edge whose intersection with the y-axis is $\{(0, y)\}$ or a vertex at $(0, y)$, we say that the edge or vertex *crosses the y-axis at y*.

Let $L = C^-$, $R = C^+$. We say that an edge of T is a *marked edge* if its intersection with C is non-empty, otherwise it is an *unmarked edge*. A marked edge is a *crossing edge* if its intersection with each of L and R is non-empty. An edge that is not a crossing edge is a *non-crossing edge* (and may be marked or unmarked).

The proof is by induction on $n + m$, where n is the number of vertices of T and m is the number of non-crossing edges. We begin by describing reductions that allow us to apply the inductive hypothesis. When none of these reductions are possible, we arrive at our base case. To handle this base case we argue that T has a sufficiently simple structure that it can be handled by Theorem 5.

Before continuing, we dispense with one easy special case. If C contains an edge e of the outer face, f, then every vertex of G is contained in $C^- \cup C$ or every vertex of G is contained in $C^+ \cup C$. In this case, the definition of compatible triangle implies that the edge $\alpha\beta$ of Δ is contained in the y-axis. In this case, we can simply apply Tutte's Convex Embedding Theorem to obtain a Fáry embedding of G in which f is embedded on Δ with e embedded on $\alpha\beta$, . This embedding satisifies all the conditions of the theorem. Therefore,

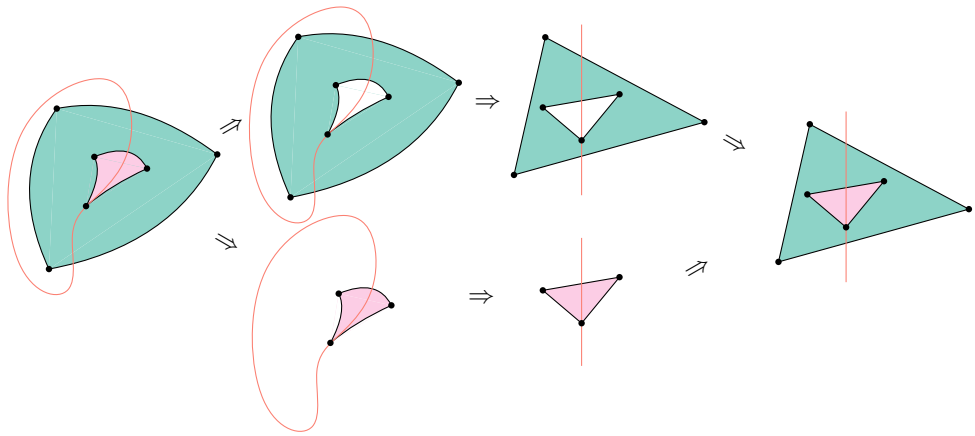

Figure 8: Recursing on separating triangles in the proof of Theorem 6

for the remainder of this proof, we assume that C intersects the interior of at least one inner face of G.

Separating Triangles. (See Figure 8.) If T contains a separating triangle xyz then we remove all vertices from the interior of xyz to obtain a graph T^+ in which xyz is a face. If the interior of xyz does not intersect C, then we can apply induction on T^+ (which has fewer vertices) and then use Tutte's Convex Embedding Theorem to draw T^- so that its outer faces matches the embedding of xyz in T^+.

Therefore, assume that xyz has a non-empty intersection with C. Since the intersection of C with each of xy, yz and zx consists of at most a single point, the vertices and edges of T intersected by C that are not in T^+ appear as a contiguous subsequence $r_i, \ldots, r_j$.

Observe that each of r_{i-1} and r_{j+1} is either an edge or vertex of the triangle xyz. Set ϵ' to be any value less than $\min\{\epsilon, y_i - y_{i-1}, y_{j+1} - y_j\}$. and apply induction on T^+ using the value ϵ' and the sequences $r_1, \ldots, r_{i-1}, r_{j+1}, \ldots, r_k$ and $y_1, \ldots, y_{i-1}, y_{j+1}, \ldots, y_k$ to obtain an embedding of T^+. In the resulting embedding xyz becomes a triangular face Δ'.

In the resulting embedding, Let y'_{i-1} and y'_{j+1} be the respective y-coordinates of the intersections of r_{i-1} and r_{j+1} with the y-axis. By our choice of ϵ', $y'_{i-1} < y_i < \cdots < y_j < y'_{j+1}$. Observe that Δ' is compatible with $r_{i-1}, \ldots, r_{j+1}$ and $y'_{i-1}, y_i, \ldots, y_j, y'_{j+1}$.

Let T^- be the graph obtained by removing, from T, all vertices outside of xyz. Now we apply induction on T^- using the triangle Δ' and the sequences $r_{i-1}, \ldots, r_{j+1}$ and $y'_{i-1}, y_i, \ldots, y_j, y'_{j+1}$. Combining the embeddings of T^+ and T^- yields an embedding of T that satisfies the requirements of the theorem. Thus, we may assume that T has no separating triangles.

Contractible Edges: (See Figure 9.) We say that a triangular face of T is a *crossing face* if it is incident to two crossing edges. We say that an unmarked edge of T is *contractible* it is not contained in the boundary of any crossing face.

If T contains a contractible edge xy then we contract xy to obtain a new vertex v

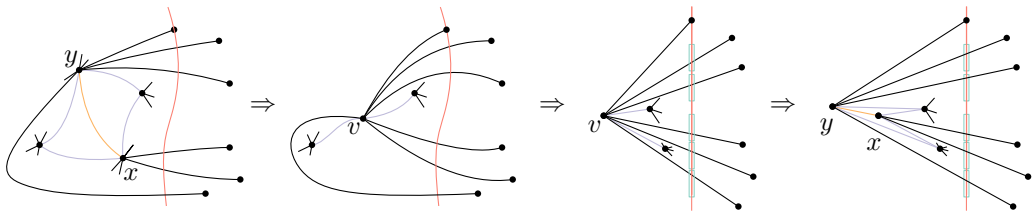

Figure 9: Contracting and uncontracting edges in the proof of Theorem 6

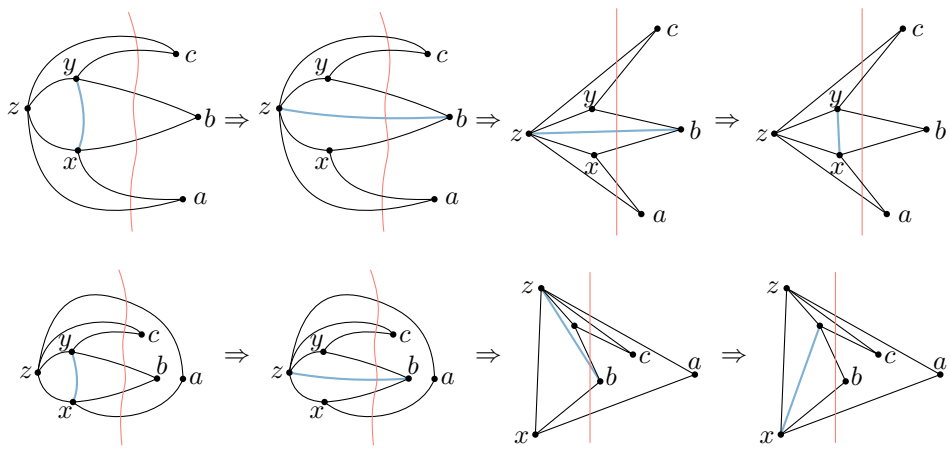

Figure 10: Flipping edges in the proof of Theorem 6

in a smaller triangulation T'. We can then apply induction on T' with the value $\epsilon' = \epsilon/2$ to obtain an embedding of T' that satisfies all the conditions of the theorem under the stronger condition that each crossing edge e_i crosses the y-axis in the interval $[y_i - \epsilon/2, y_i + \epsilon/2]$.

To obtain an embedding of T we uncontract v by placing x and y within a ball of radius $\epsilon/2$ centered at v. (That such a placement is always possible is a standard argument.) Since the distance between y and v and the distance between x and v are each at most $\epsilon/2$, each crossing edge r_i incident to x or y will cross the y-axis in the interval $[y_i - \epsilon, y_i + \epsilon]$, as required. Thus we may assume that T has no separating triangles or contractible edges.

Flippable edges. (See Figure 10.) We say that an unmarked edge xy of T is *flippable* if there exists distinct vertices z, a, b, and c, such that

1. xyb, zyc, xza are crossing faces of T;
2. xyz is a non-crossing face of T; and (
3. C intersects za, xa, xb, yb, yc, and zc in this order; or
4. or C intersects xa, xb, yb, yc, zc, and za in this order).

If T contains the flippable edge xy then we remove xy and replace it with zb to obtain a new graph T'. Note that, since T has no separating triangles, the edge zb is not already present in T. After choosing a crossing coordinate for zb somewhere between those of xb and yb we can then inductively embed T'.

We claim that in the resulting embedding of T', the only open edge that intersects the open segment xy is zb. In particular, we must ensure that z is not a reflex vertex in the quadrilateral $xbyz$. To show this we distinguish between the two possible cases (3 and 4) in the definition of flippable edges. In Case 3, The existence of the edges za and zc ensure that, in the resulting embedding of T', $xcyz$ is convex. In Case 4, the triangle zxa is convex and $xbyz$ is contained in this triangle, therefore z is a convex vertex of $xbyz$.

In either case, removing zb from the embedding of T' and replacing it with xy yields the desired embedding of T.

Edges in C. If T contains any edge xy that is contained in C, then we treat these exactly the same way we treat flippable edges. In this case, xy is incident to two triangles xyz and yxb with $z \in C^-$ and $b \in C^+$. We remove xy and add zb to obtain a new triangulation T' that has one more crossing edge and on which we can apply induction. In the resulting Fáry embedding of T', z and b are on opposite sides of the y-axis and x and y are on the y-axis, so the neither z nor b is a reflex vertex of the quadrilateral $xzyb$. Thus, removing zb and adding xy gives a Fáry embedding of T'.

The Base Case. Finally, we are left with a situation in which T is a triangulation with no separating triangles, no contractible edges, no flippable edges, and no edge contained in C. If T is the complete graph K_3 or K_4 on three or four vertices, then the theorem is trivial, so we may assume that T has at least 5 vertices.

We claim that every unmarked edge xy of T is contained in the boundary of two crossing faces xya and yxb. To see why this is so, the reader should first pick up a pencil and paper. Next, observe that if some unmarked edge xy is not contractible then one of xy's incident faces, yxb is crossing. Suppose, for the sake of contradiction, that the other face xyz, incident to xy is not crossing. Since neither zx nor yz is contractible, they must be incident to crossing faces xza and zyc, respectively. If $a = b = c$, then T is the complete graph, K_4, on four vertices, which we have already ruled out. Therefore, assume without loss of generality that $b \neq c$. Since T contains no separating triangles, we know that $a \neq c$, otherwise xya would separate z from b.

This leaves us in the situation in which we have distinct vertices x, y, z, a, b, c, such that xyb, zyc, xza are crossing faces of T and xyz is a non-crossing face of T. Checking the definition of flippable edge then ensures that at least one of xy, yz, or zx is a flippable edge.

Thus, every unmarked edge of T is incident to two crossing (triangular) faces. The union of these two faces is a quadrilateral whose boundary consists of four crossing edges. Let Q^* denote the graph obtained by removing all unmarked edges from T. Each face of Q^* is a quadrilateral having four crossing edges, or a triangle having three marked edges. Note that this operation may, and typically does, remove one edge from the outer face of T so that the outer face of Q^* becomes a quadrilateral.

The only triangles with three marked edges are those triangles having one vertex in each of C, L and R. Now, consider any vertex $v = r_i$ on C. The graph Q^* has two triangular faces vab and vcd incident to v such that $ab = r_{i-1}$ and $cd = r_{i+1}$. Split v into two vertices $x \in L$ and $y \in R$ joined by the edge xy, make x adjacent to all neighbours of v in R, and make

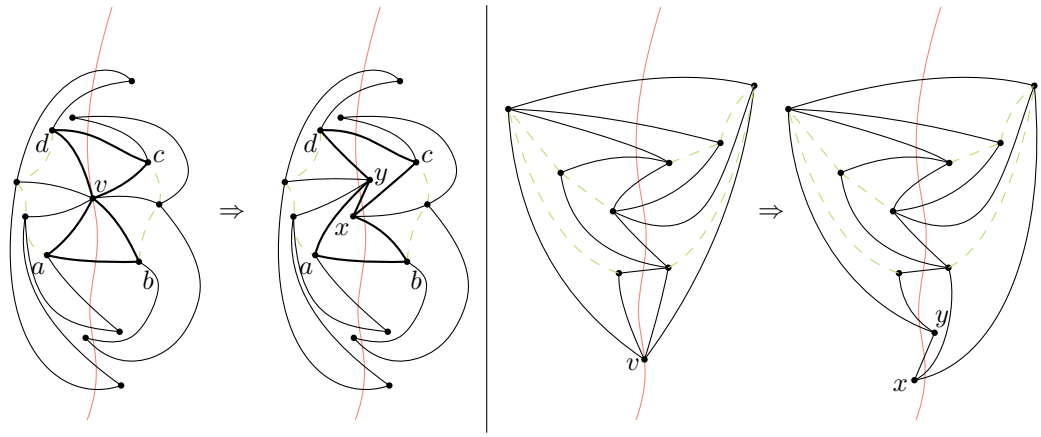

Figure 11: Splitting vertices on C in the proof of Theorem 6.

y adjacent to all neighbours of v in L. See Figure 11. This splitting operation eliminates the triangular faces vab and vcd and introduces the quadrangular faces $xyab$ and $yxcd$.

Since no edge of Q^* is in C, the vertices in $r_1,\dots,r_k$ form an independent set in Q^*. Therefore, this splitting operation can be done on every vertex of Q^* that is on C to obtain a quadrangulation Q in which every edge crosses C, as well as an independent set S of split edges in Q. Theorem 5 then provides an embedding of $Q_S = Q^*$ that satisfies all the conditions of the theorem. Reinserting the unmarked edges in the quadrangular faces of the resulting embedding provides the desired embedding of T. □

Corollary 3. *Every collinear set is free.*

Proof. Given an embedded graph G, a collinear set S in G, and any $y'_1 < \cdots < y'_{|S|}$, we need to show that G has a Fáry embedding in which the vertices of S are placed at $(0,y_1),\dots,(0,y_{|S|})$. Theorem 2 implies that there exists a Jordan curve C that is admissible for G and that contains all the vertices of S in some order, say $v_1,\dots,v_{|S|}$. The curve C intersects a subset of the edges and vertices of G in some order $r_1,\dots,r_k$. We choose any sequence $y_1 < \cdots < y_k$ so that, for all $i \in \{1,\dots,k\}$ and $j \in \{1,\dots,|S|\}$, $y_i = y'_j$ if $r_i = v_j$. We then select any triangle Δ that is compatible with $r_1,\dots,r_k$ and $y_1,\dots,y_k$ and choose $\epsilon = \min\{(1/3)(y_{i+1} - y_i) : i \in \{1,\dots,k-1\}\}$. Applying Theorem 6 then gives a Fáry embedding of G in which the vertices in S appear at positions $y'_1,\dots,y'_{|S|}$, as required. □

5 Concluding Problem

Let $f(n)$ the minimum over all planar n-vertex graphs G of the size of the largest collinear set in G. The best known bounds are $f(n) \in \Omega(\sqrt{n})$ and $f(n) \in O(n^\sigma)$, for $\sigma < 0.986$ [1, 7]. The results of the current paper make determining the growth rate of $f(n)$ even more relevant.

Open Problem 1. What is the growth rate of $f(n)$?

WHY ARE ALL DOI'S GIVEN TWICE?

References

[1] Prosenjit Bose, Vida Dujmovic, Ferran Hurtado, Stefan Langerman, Pat Morin, and David R. Wood. A polynomial bound for untangling geometric planar graphs. *Discrete & Computational Geometry*, 42(4):570–585, 2009. URL: https://doi.org/10.1007/s00454-008-9125-3, doi:10.1007/s00454-008-9125-3.

[2] Javier Cano, Csaba D. Tóth, and Jorge Urrutia. Upper bound constructions for untangling planar geometric graphs. *SIAM J. Discrete Math.*, 28(4):1935–1943, 2014. URL: https://doi.org/10.1137/130924172, doi:10.1137/130924172.

[3] Olivier Devillers, Giuseppe Liotta, Franco P. Preparata, and Roberto Tamassia. Checking the convexity of polytopes and the planarity of subdivisions. *Comput. Geom.*, 11(3-4):187–208, 1998. URL: https://doi.org/10.1016/S0925-7721(98)00039-X, doi:10.1016/S0925-7721(98)00039-X.

[4] Vida Dujmovic. The utility of untangling. *J. Graph Algorithms Appl.*, 21(1):121–134, 2017. URL: https://doi.org/10.7155/jgaa.00407, doi:10.7155/jgaa.00407.

[5] Giordano Da Lozzo, Vida Dujmović, Fabrizio Frati, Tamara Mchedlidze, and Vincenzo Roselli. Drawing planar graphs with many collinear vertices. *Journal of Computational Geometry*, 9(1):94–130, 2018.

[6] Alexander Ravsky and Oleg Verbitsky. On collinear sets in straight line drawings. *CoRR*, abs/0806.0253, 2008. URL: http://arxiv.org/abs/0806.0253, arXiv:0806.0253.

[7] Alexander Ravsky and Oleg Verbitsky. On collinear sets in straight-line drawings. In Petr Kolman and Jan Kratochvíl, editors, *Graph-Theoretic Concepts in Computer Science - 37th International Workshop, WG 2011, Teplá Monastery, Czech Republic, June 21-24, 2011. Revised Papers*, volume 6986 of *Lecture Notes in Computer Science*, pages 295–306. Springer, 2011. URL: https://doi.org/10.1007/978-3-642-25870-1_27, doi:10.1007/978-3-642-25870-1_27.

[8] William T. Tutte. How to draw a graph. *Proceedings of the London Mathematical Society*, 13:743–768, 1963.