Advanced Quantum Algorithms

Lecture notes

Guglielmo Mazzola

Spring 2026

Theory and Simulation of Condensed Matter Sector - SISSA

Abstract

"Advanced quantum algorithms" provides a reasonably complete overview of the state of the art in the algorithmic side of quantum computing, including modern developments. The notes will cover the most promising quantum algorithms that are expected to achieve quantum advantage in the near future, as well as the challenges and limitations of quantum computing.

A short bibliography is placed at the end of each chapter. While a short and self-contained description of basic quantum gates and circuit will be provided, this should *not* be understood as standard quantum information course. We are not going to cover topics such as foundations of quantum mechanics, cryptography, teleportation, or paradoxes. *Gedanken experiments* conducted by Alice and Bob are also outside the scope of the course.

The course is designed to be accessible to students with limited knowledge of quantum information science and diverse backgrounds, such as theoretical physics, condensed matter, theoretical chemistry, or quantum engineering.

Contents

I Basic Course **1**

1 Introduction **2**
1.1 Scalings and prefactors . . . 3
1.2 Hardwares overview . . . 4
1.2.1 Analog devices . . . 5
1.2.2 Digital devices . . . 6
1.2.3 NISQ devices . . . 9
1.3 Quantum software engineering . . . 9

2 Qubits, gates, and circuits **14**
2.1 Qubits and Hilbert spaces . . . 14
2.1.1 Product and entangled states . . . 16
2.1.2 Operators . . . 17
2.1.3 Projectors . . . 18
2.2 Quantum gates . . . 18
2.2.1 One qubit gates . . . 18
2.2.2 Gate synthesis, logical vs parametrized gates . . . 19
2.2.3 Two qubit gates . . . 21
2.3 Circuits and circuit emulators . . . 22
2.3.1 Oracles . . . 24
2.3.2 Controlled operations . . . 25
2.3.3 Universal gate sets . . . 27
2.4 Measuring operators . . . 27
2.4.1 Measuring non-diagonal operators . . . 28
2.4.2 Measuring multi-qubits and non-diagonal operators . . . 28

3 Quantum annealing **31**
3.1 A quantum device for classical optimization . . . 31
3.2 A bit of complexity theory . . . 32
3.2.1 Approximate solutions . . . 33
3.3 Spin glasses . . . 34
3.4 The adiabatic principle perspective . . . 35
3.4.1 Practical metrics for measuring QA success . . . 37
3.5 The incoherent tunneling perspective . . . 38
3.5.1 Quantum inspired classical algorithms . . . 39

4 Hamiltonian simulation **42**
4.1 Motivation and quantum advantage . . . 42
4.1.1 Classical competitors for physics applications . . . 43
4.2 Product formulas . . . 44
4.2.1 Trotter errors and randomized compilation . . . 46
4.3 Gate compilation for Pauli strings . . . 48
4.4 (Quick intro of) Linear Combination of Unitaries . . . 50
4.5 Finding ground states through dynamics . . . 54
4.5.1 Quantum Phase estimation with Quantum Fourier Transform . . . 55
4.5.2 Errors and runtime for energy estimation . . . 58

5 Physics-to-qubits mappings **61**
5.1 Fermionic hamiltonians . . . 61
5.1.1 Fock state encoding . . . 62
5.1.2 Jordan-Wigner transformation . . . 64
5.1.3 Circuits for hamiltonian simulations . . . 65
5.1.4 A worked example: an hydrogen-like molecule with four orbitals . . . 66
5.2 Bosonic hamiltonians . . . 69
5.2.1 Unary, one-hot encoding . . . 69
5.2.2 Binary, compressed encoding . . . 70
5.3 First-quantized hamiltonians . . . 71
5.3.1 Wave-packet propagation in one dimension . . . 72

6 Variational algorithms **74**
6.1 Variational quantum eigensolver . . . 74
6.1.1 Circuit trial states . . . 75
6.1.2 Energy and gradient based optimization . . . 79
6.1.3 Parameter shift rule . . . 79
6.1.4 The measurements problem . . . 81
6.2 QAOA . . . 82

7 Algorithms for search and sampling **85**
7.1 Amplitude amplification . . . 85
7.2 Oracles and quantum advantage . . . 89
7.3 Amplitude estimation . . . 91
7.3.1 Evaluating integrals with QAE . . . 91

8 Quantum machine learning (basic concepts) **94**
8.1 Kernel methods . . . 94
8.1.1 Support vector machines . . . 94
8.1.2 Quantum SVM . . . 96
8.2 Quantum neural networks . . . 98
8.3 QML and practical quantum advantage . . . 99
8.4 Dequantization of QML . . . 100

II Advanced Course **102**

9 Block Encoding **103**
9.1 Working in a larger Hilbert space . . . 103
9.2 Block-Encoding of a Non-Unitary Matrix . . . 105
9.2.1 (α, k, ε)-Block-Encoding . . . 107
9.2.2 Example: Block-Encoding of the Projector $|0\rangle\langle 0|$ . . . 107
9.2.3 Success Probability . . . 109
9.2.4 The SWAP Test as a Block-Encoding of a Projector . . . 109
9.3 Linear Combination of Unitaries . . . 111
9.3.1 Pauli Strings as a Basis for Operator Space . . . 111
9.3.2 Prepare and Select Oracles . . . 111
9.3.3 LCU of a simple unitary . . . 113
9.4 Hamiltonian Simulation by Qubitization . . . 115
9.4.1 The Walk Operator . . . 115

10 Quantum Signal Processing **120**
10.1 QSP in the X-basis . . . 120
10.1.1 Proof of the forward direction . . . 121
10.1.2 Examples: Chebyshev polynomials . . . 122
10.1.3 Sketch of the backward direction . . . 122
10.1.4 Constructing a simple filter with QSP . . . 123
10.1.5 Basis read-out for real-valued polynomial targets . . . 124
10.2 Hamiltonian Simulation using QSP . . . 125
10.2.1 Remarks on QSP phase synthesis . . . 128

11 Quantum Walks **129**
11.1 Classical random walks on graphs . . . 129
11.1.1 Graphs and transition matrices . . . 129
11.1.2 Stationary distribution and the d-regular case . . . 130
11.1.3 Convergence to equilibrium . . . 130
11.1.4 From mixing to hitting time . . . 131

Part I

Basic Course

Chapter 1

Introduction

As quantum technology advances, it is becoming increasingly possible to develop quantum devices, such as quantum communication systems, quantum random number generators, quantum simulators and computers, which may have capabilities that surpass those of classical capabilities. The field of quantum computing has garnered significant attention due to its potential to solve certain computational problems much more quickly than classical computers can. These problems include factoring integers and simulating quantum systems. Shor's algorithm, for example, can find the prime factors of an integer in a time that grows in a polynomial fashion with the number of digits in the integer, while classical algorithms for this task require exponential time. Similarly, simulating the time evolution of a quantum system on a classical computer requires exponential resources, due to the exponentially large size of the system's Hilbert space, while quantum hardware can perform the same simulation with polynomial complexity(1). Moreover, complexity theory arguments often applies for *exact* solutions. In real-world, approximate -good- solutions are very valuable (let't think about optimization, quantum chemistry, machine learning..). This means that it is not obvious to identify a set of problems and quantum algorithms able to showcase quantum advantage in practice.[1]

The quest for quantum speed-up is on. As of today, *it is still unclear* what will be the first concrete problem, or practical relevance, that will enjoy quantum speed-up. The answer to this question will depend on several factors: the **specific use-case** application, the **algorithm** used, and the **hardware**.

The purpose of this chapter is to outline the goals of a general quantum algorithm, the current capabilities of available ad future devices. It is also important to understand the limitations that these architectures will impose on a quantum algorithm. Finally, we will discuss the abstractions and layers of a generic quantum software.

Disclaimer: Some concepts will appear undefined or loosely defined for an un-initiated reader. While these definitions will be provided later, the logical implications outlined in the Chapter can still be accessible. I prefer to give first an high-level overview before zooming in to definitions.

[1]For instance, in the context of optimization is not clear if, and how, practical quantum advantage can be reached. Also in quantum chemistry, a field which has been considered for a long time to be the most promising one, people are critically reassessing overly optimistic claims of exponential quantum advantage.

1.1 Scalings and prefactors

In certain cases, like the ones listed above, quantum algorithms can outperform their classical counterparts by an exponential margin (as the problem size increases). This type of exponential speedup makes it easier to compare the efficiency of different algorithms. According to the extended Church-Turing thesis, all classical computers are equivalent in terms of their computational capabilities, differing only by polynomial factors. Similarly, all proposed models of quantum computation are believed to be equivalent, meaning that an exponential quantum speedup would be independent of the specific model being used. There are quantum algorithms that can provide instead "only" a polynomial speedup. Most of the time, this polynomial speed-up is a quadratic one (like in the Grover algorithm), thus introducing complications in assessing the potential advantage of quantum algorithms as we will see.

Many of the most well-known quantum algorithms, such as Shor's and Grover's algorithms, were developed (around the 90's) before the actual quantum devices have been built. For a long time, the field of quantum computation had a strong connection to pure quantum information science and was driven more by mathematicians than by physicists. The primary focus of research was on achieving scaling advantage, or the ability for quantum algorithms to perform better than classical algorithms as the size L of the problem increases. However, it is now understood that **scaling advantage alone is not sufficient for achieving practical advantage**. For instance, an algorithm that scales exponentially but has a weak exponent (i.e. $e^{0.01\ L}$) may still be faster than a polynomial algorithm with a large power and prefactor (i.e. L^{10}) for problem sizes below a certain threshold (in this case $L \approx 10^4$). In this case, the exponentially scaling solution would be the better choice for practical purposes.

When considering the performance of quantum computers, with a practical mindset, we cannot neglect the hardware. Currently, there are two main types of quantum computers: analog and digital. While we will discuss the distinction between these types later, it is important for the time being just to note that all quantum computers must be controlled and their states must be changed in order to perform a computation. It turns out that the speed at which we can **control a quantum system** depends on the specific quantum architecture being used, and is generally much slower than the clock rate of classical CPUs (this will be discussed below).

This means that quantum computers will eventually be more powerful not because they are intrinsically faster (at the gate level), but because they can process vast amounts of information in a different way than classical computers can. This is why people are interested in scaling assessment, or the ability of quantum algorithms to perform better as the size of the problem increases. However, the fact that quantum computers are "slow", in the sense defined above, means that there is a **large prefactor** that can overshadow the scaling advantage until a certain crossover problem size L_C is reached. In general, quantum computers are likely to be slower than classical computers for small problem sizes, and the quantum speedup will only occur for large sizes. The key challenge is to identify a class of problems for which the threshold size L_C is still meaningful and the total runtime t_C is still practical.

While quite obvious, this concept has been internalized by the community only recently, especially thanks to end-to-end resource assessment like this (2) for quantum chemistry, or the debate around the insufficiency of a quadratic speed-up to achieve practical advantage in

the fault tolerant regime(3)

1.2 Hardwares overview

There are numerous ways to physically implement a qubit. For example, it can be represented by a single atom, electron, or photon. Alternatively, a qubit can also be represented by a more complex system, such as a superconducting electrical circuit cooled to a very low temperature, in which many electrons are involved. Matematically a qubit is just a two-level system, but not all two-level systems in Nature can be good qubits.

A working qubit needs to have the following:

- It must behave as a two-level systems, isolated from external influences as much as possible.
- It must interact strongly with other qubits in perform computational tasks.
- It can be controlled and readable from outside

It is clear that an electron in a molecule does not have all these properties, despite being a spin 1/2 quantum particle.

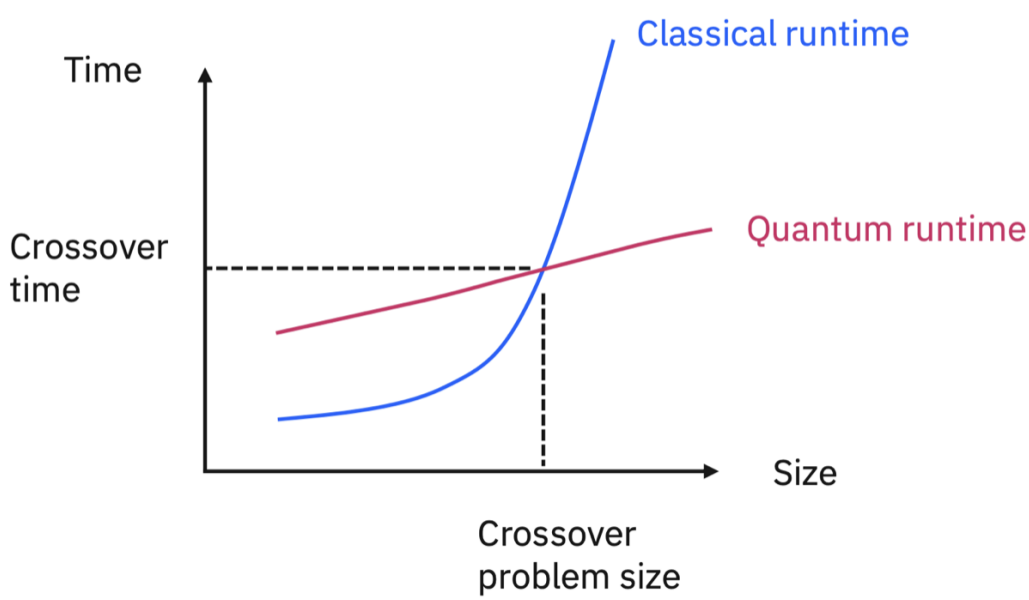

Figure 1.1: Cartoon of quantum and classical runtimes for a generic situation where a quantum algorithm has scaling advantage over its classical counterpart (e.g. it may be a the task of time-evolving a quantum state, under the action of a lattice hamiltonian, like Hubbard one.) For small system size, the scaling advantage is obfuscated by the large prefactor. Only at sufficiently large size, we can achieve practical advantage.

.

It is not the purpose of this lecture note to provide an exhaustive account of quantum hardware. For our purpose, it can be enough to separate quantum hardwares in classes: analog and digital ones. For the purpose of this lecture note, we can think about superconducting qubits, which are made of solid state electrical circuits fabricated using techniques similar to conventional integrated circuits. When cooled down to mK temperatures they develop superconductivity, which is a *macroscopic* quantum phenomena. A superconducting qubit, satisfies those constraints as it is a macroscopic quantum system that can be well approximated by a two level quantum system, it can be controllable by classical electronics, and can be manifactured to realize bigger systems. Being a macroscopic system, it features more interactions with the environment, i.e. noise, this is the price to pay to have a controllable and scalable qubits. For an introductory review of supercondicting qubits, which is the main technology in use today, I refer the reader to (4).

1.2.1 Analog devices

A quantum simulator is a **special purpose quantum device** that allows researchers to study a quantum system in a controlled, programmable manner. These simulators are specifically designed to provide insight into specific physics problems, like finding phase diagrams of lattice models, or study their out-of-equilibrium dynamics. Concretely this means to find a time evolved state, under the action of an Hamiltonian operator H,

$$|\psi(t)\rangle = e^{-iHt}|\psi_0\rangle \tag{1.1}$$

where $|\psi_0\rangle$ is not an eigenstate of H, or the hamiltonian itself is time dependent, $H \to H(t)$.

Quantum simulators can be defined in constrast to general purpose, “digital" quantum computers, which have the ability to solve a broader range of task. Quantum simulators can be build using trapped ions, ultracold atoms, and superconducting qubits. These quantum simulators are made of many-body quantum systems whose hamiltonians can be engineered to approximate the one we are interested in, e.g. quantum simulators for the Hubbard or transverse field Ising model.

We will set aside the philosophical question of what constitutes a *simulation versus a computation*. A practical, though not entirely satisfactory, answer may be that a quantum computer has the ability to perform a wide range of tasks, such as simulating a quantum system or calculating the fair value of a financial derivative, while a quantum simulator is designed with a specific physical model in mind to simulate. For instance, in the case of ultracold atoms simulators, if one aims to “solve” a fermionic model hamiltonian, fermionic atoms will be loaded in the optical potential, otherwise bosonic atoms will be required. This is in contrast with standard “classical” simulations, e.g with quantum Monte Carlo algorithms, where we do not have to change our laptop or HPC cluster when we change the model under study.

However, there are two reasons why the previous answer may not be entirely correct. For instance, consider a quantum simulator designed to implement the transverse field Ising Hamiltonian using superconducting qubits,

$$H = -\sum_{i,j=1}^{L} J_{i,j}\sigma_i^z\sigma_j^z - \Gamma\sum_{i=1}^{L}\sigma_i^x \tag{1.2}$$

If used in its "simulator" mode, it could simulate the real-time dynamics of a quenched Hamiltonian, which would be intractable for classical methods to solve for large enough times. However, if the programmable, time-dependent Hamiltonian has the shape of a linear ramp (i.e. $\Gamma \to \Gamma(t)$), it can be used to perform a **quantum annealing** simulation (see Chapter 3). This process can be used in optimization, and if programmable couplings between the qubits can also be engineered, a combinatorial optimization problem can be embedded into an Ising spin Hamiltonian. Finding the ground state of this Hamiltonian through quantum annealing would solve the optimization problem, performing a computation. [2] This is exactly what D-Wave quantum machines have been attempting to do since 2011(5).

The second reason is that the progress in controlling quantum particles in quantum simulators is enabling the **realization of gates**. After all, hamiltonian dynamics is a unitary operation, such as the one implied by quantum gates. For instance, trapped ions are systems that can be used for quantum simulations of spin models but can be used to construct, more generally, quantum computers. A qubit in this case is the space represented by the ground state electronic level and an excited level of a single ion. By applying laser excitations and utilizing the collective motion of the array, it is possible to generate effective interactions, which can be used to create either spin models interaction with custom long-range interactions, or quantum gates. For instance, rotation gates (see Chapter 2) can be realized by manipulating the frequency and total time of an external electromagnetic field that is locally applied to an ion. This drives a transition from the ground-state to the excited state. The same holds for superconducting qubits.

One major drawback of analog simulators is that **errors cannot be reliably detected and corrected**. For example, if the pulse used to generate a rotation gate has a slightly different frequency than intended, the rotation gate will be imperfect and it is not possible to correct infinitesimal errors that can accumulate and lead to significant effects, known as calibration errors. Another type of error is decoherence, which occurs when the quantum system interacts with the environment and limits its coherence time. These errors can significantly impact the final results of the calculation in an unpredictable and uncorrectable manner. This is why there is also interest in a digital model of quantum computation. From an historical point of view, the first quantum analog simulation of a strongly correlated quantum model dates back to 2002(6). After more than twenty years, we can safely observe that they didn't replace classical simulations.

To summarize, specifying a given architecture, e.g superconducting qubits or ions, is not per se enough to distinguish between a quantum simulator or a computer. What matters is the use of the machine, and the quality of the hardware that can enable the realization of quantum gates using precise control.

1.2.2 Digital devices

Digital quantum computers are the opposite end of the spectrum compared to analog machines. They aim to implement the quantum circuit model for quantum computation, which is similar to classical circuits in that it involves a sequence of quantum gates, measurements,

[2] Moreover, adiabatic quantum computing has been shown to be equivalent to gate based computing. However, this would require machines which are not present today.

and initialization of qubits to known values. **Quantum logic gates** are reversible, unitary transformations that act on one or more qubits. In the circuit model, quantum algorithms are constructed using these elementary blocks, regardless of the specific hardware type.

Coming to our quantum simulation task example, digital quantum simulators have the advantage of being able to realize any desired Hamiltonian of the system, which allows for the study of a wide range of models without the need for direct engineering in the laboratory. In addition, quantum logic gates can be used to create arbitrary quantum circuits with a wide variety of applications.

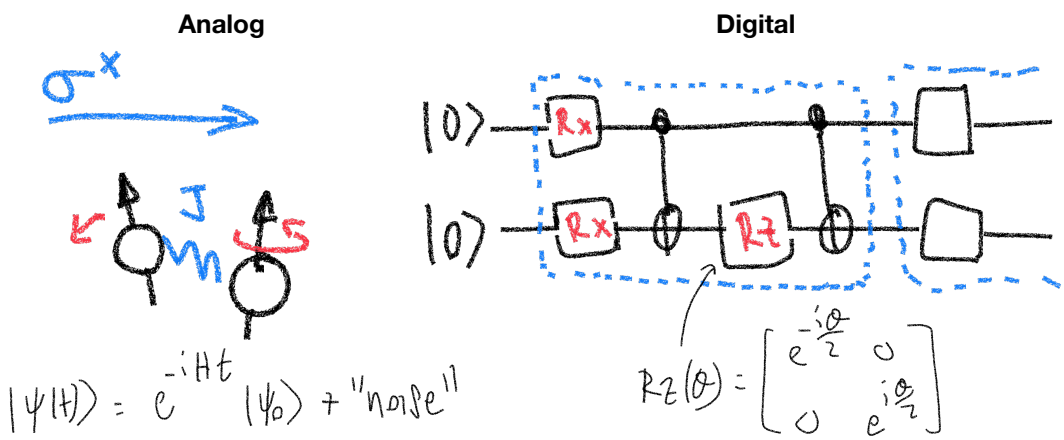

Figure 1.2: The two ways to perform quantum simulations of a two-site transverse field Ising model. In the analog regime, one engineer couplings between the qubits to represent the hamiltonian under study H. In the digital regime, one can only play with building blocks: digital quantum gates. For the Ising model case, one needs only parametrized R_x and R_z rotation gates, and CNOT gates (details will be provided in Chapter 4). Quantum simulations need to be performed using an algorithm: the Trotter algorithm. Analog simulations are philosophically closer to an experiment.

.

On the other hand, performing a quantum simulation with analog devices is much like performing an experiments, asking a programmable quantum device to simulate itself and measure the state of the device after a certain amount of physical time. The digital setting works at a higher level of abstraction: the real-time quantum dynamics must be performed using algorithms, similar to classical computing. The Hamiltonian evolution operator is subjected to Trotterization, and each of the non-commuting unitary operators is compiled into logical gates (more in Chapter 4). In the fault-tolerant regime, there are no errors other than the finite-time Trotterization scheme, which can be systematically controlled (cfn Figure 1.2).

Most of the algorithms presented in these notes are devised within the circuit model of quantum computation. A self-contained description of quantum register, circuits, and quantum gates will be provided in Chapter 2. For the time being, we continue with our high level description of the capabilities of digital devices, however, if these concepts are

completely unfamiliar, readers who prefer having definitions first can jump to Chapter 2 or read the introductory Chapters of books such as (1), and come back.

They key advantage of digital quantum machines is that they can be error corrected. The quantum threshold theorem (or quantum fault-tolerance theorem) states that a quantum computer with a physical error rate below a certain threshold can, through the use of quantum error correction schemes, reduce the logical error rate to arbitrarily low levels (cfn. Ref (1)).

Fault-tolerant digital computation then introduces the concept of a **logical qubit**, as opposed to the **physical qubits** that are the units presents in the hardware. A logical qubit is an ideal qubit that is not affected by noise and decoherence, and gates that are perfectly implementing the unitary matrices they are intended to. It is currently believed that many physical qubits are necessary for error-correction in order to create an entity that behaves like a single qubit. To achieve this, multiple physical qubits are used along with algorithms that are able to detect and correct errors, creating a logical qubit. Alternatively, it is possible to directly construct a logical qubit using a topologically protected physical qubit, a technology currently pursued by Microsoft.

Here we briefly consider the standard approach to fault-tolerance using error correction. Error correction algorithm include topological stabilizer codes like the surface code(7) and subsystem codes like the Bacon-Shor code. The surface code, with its high error tolerance and simple, two-dimensional physical layout with only nearest-neighbor coupling, is one of the most realistic approaches to building a solid-state quantum computer. However, it comes at a cost, as implementing the surface code requires a **large number of physical qubits**. In fact, it takes a minimum of 13 physical qubits to create a single logical qubit.

At this point, we are not yet able to explain the surface code without formally introducing the concept of quantum gates. For now, it is sufficient to know that there is a clear strategy for building fault-tolerant quantum computers, giving hope that the circuits we will see in the next chapter could be realized without worrying about hardware noise.

However, there are two issues that the reader should be aware of at this stage. These are fundamental questions that will apply to any hardware implementation of a quantum computer and will be relevant in assessing the feasibility of the quantum algorithms we will propose.

Computer's size. The first issue is that, because a logical qubit is made up of several physical qubits, and these physical qubits have a non-negligible size of around hundreds of micrometers (for superconducting qubits), a large fault-tolerant quantum computer will also be very big, also taking into account the classical electronics needed to control the system. As the physical qubit error rate increases, the number of physical qubits needed to create a single logical qubit error rate increases from the minimum value of 13 to (tens of) thousands. For example, IBM is building a dilution refrigerator larger than any commercially available today anticipating the possibility to host a million-qubit chip. While this number may seem large, it is an optimistic estimate for the size of the chip needed to fault-tolerantly encode algorithms for quantum chemistry(2) or factoring 4096-bit numbers using the Shor algorithm(7). The main takeaway here is that, given that the typical spacing between two qubit centers in a superconducting qubit chip is about 1 mm, if your quantum algorithm requires millions of logical qubits, then be prepared to build a very large fridge.

Computer's clock frequency. Beside the "space" issue, the second, perhaps even

more relevant is the "time" one. According to the surface code, operating a logical qubit involve several cycles of physical qubit operations, including measurements. It is certainly beyond the scope of this note to provide a justification, but current estimates for the **logical gate frequency** in the fault-tolerant regime are in the range of **10-100 kHz** (8). This motivates the concerns outlined in Sec 1.1 where we emphasize the importance of going beyond complexity scaling in order to understand thresholds for quantum advantage.

1.2.3 NISQ devices

To solve problems like integer factorization a universal fault-tolerant quantum computer would require millions of qubits with low error rates and long coherence times. While it may take decades of research to achieve such devices experimentally, noisy intermediate-scale quantum (NISQ) computers already exist. These computers consist of hundreds of noisy qubits, which are **qubits that are not error-corrected** and thus perform imperfect operations with a limited coherence time. Strictly speaking, NISQ machines include also analog simulators. However, currently this term indicates quantum devices build with the circuit model in mind but without error correction, e.g. the ones by IBM or Google. We can think about them as intermediate between analog devices and fault-tolerant digital machines.

NISQ machines are capable of supporting quantum logic gates, but in practice, these gates will not be perfect. For example, a CNOT gate may not implement the unitary 4×4 matrix it is supposed to (cfn. Chapter 2). Qubit readouts will also be noisy, leading to misclassification of 0s as 1s, and finite coherence times for circuits. It is unrealistic to expect a NISQ machine to execute a quantum circuit with a depth of 10000 as the result would likely be pure noise. However, if the algorithm is relatively short and the number of two-qubit gates is moderate, it is possible to prepare a quantum state that is close to the theoretical one within the coherence time of the qubits. It is worth noting that the terms "relatively" and "moderate" are used intentionally to be vague, as the required depth and number of gates for successful execution can vary. In 2023, the fidelity of a CNOT operation for IBM's superconducting machines is approximately 0.001, meaning that roughly 1 out of every 1000 CNOT operations will be faulty. Since some companies, like IBM are allowing free cloud access to some of their machines, you can check yourself the status of read-out, 1-qubit and 2-qubit errors in real-time.

NISQ machines can surely fit into fridges, since they work directly at the level of physical qubits. The gate time is also much shorter compared to fault-tolerant logical clock speed. Quoting the popular 2019 *quantum supremacy* experiment by Google(9), we obtain about a **10 ns** gate time, or **100 MHz**. This value is much better than the previous case, yet still worse than classical CPUs. Our claim that the power of a quantum device relies on the possibility to run powerful quantum algorithms and not on a constant gate speed improvement remains intact.

1.3 Quantum software engineering

One of the main advantages of the digital model is that it allows for the use of **multiple layers and abstractions**, enabling the development of complex programs. This is the approach we will take in these notes. It is similar to the way standard computational science

or physics courses operate. When writing a program, such as in *C* or *Fortran*, we use abstractions. Few people actually look at the code contained in linear algebra libraries, instead they simply use them as needed. Even fewer people understand how a compiler works or the physical laws underlying the operation of a transistor.

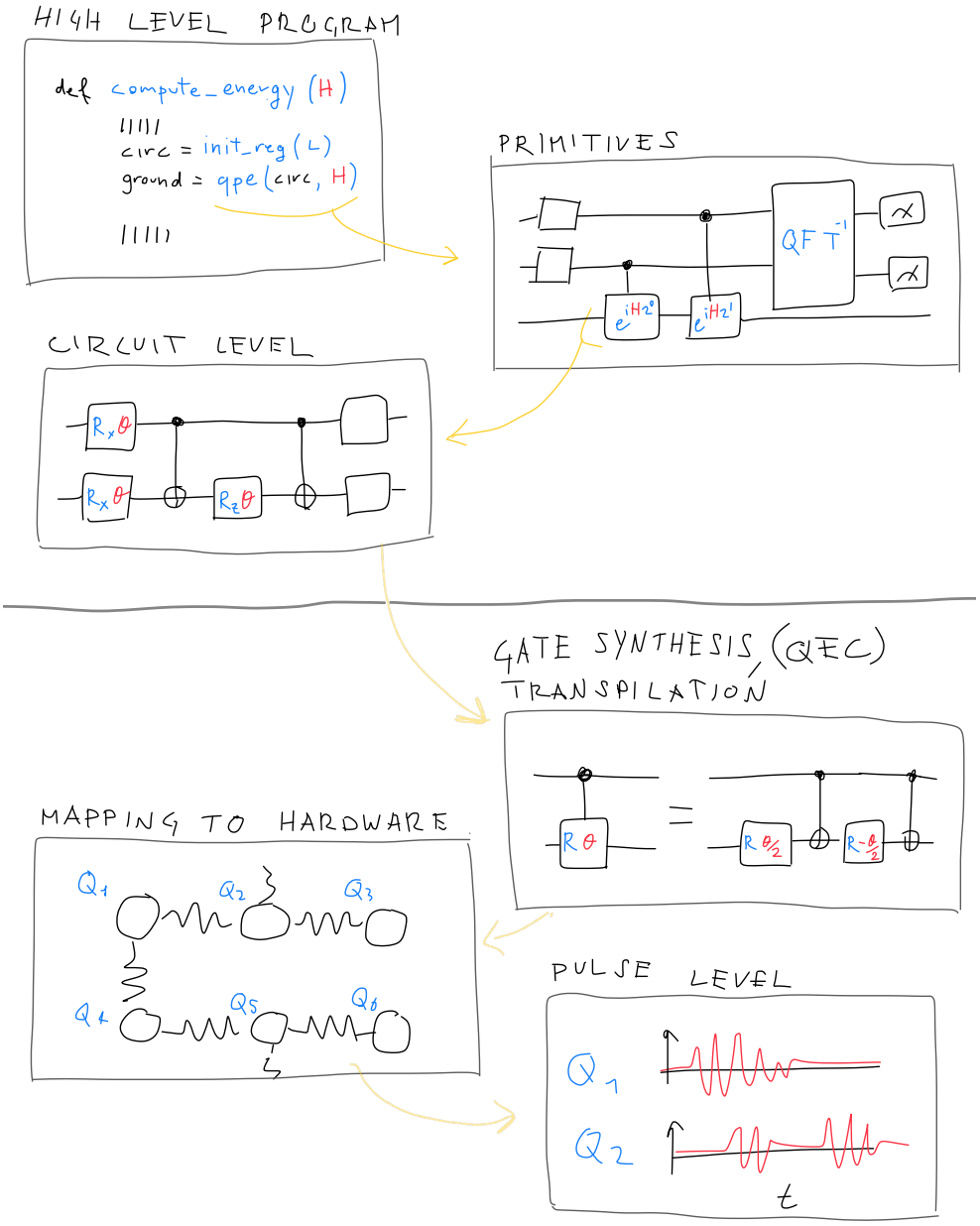

Figure 1.3: The several layers of a quantum program, from high-level human-readable instruction, to transpilation into the available gate-set, to pulse-level control of the physical qubits.

.

Currently, we are in a hybrid analog era of quantum devices, where quantum application researchers have knowledge of algorithms and a basic understanding of qubits. However, as time goes on, quantum software engineers will likely focus more on the higher-level aspects of their job. Algorithms will be largely hardware agnostic, with the exception of being aware of their fundamental limitations as discussed earlier. This is similar to how classical software engineers must consider memory and wall time limitations. However, unlike in typical computer science courses, in the next chapter we will begin at a lower level, starting with the definition of basic logic gates.

There are generally several levels of abstractions, as exemplified in Fig. 1.3.

High-level program. At the top of the design stack is a high-level language in which quantum programs are written. These programs are **sequences of classical and quantum instructions** to be executed on hybrid systems consisting of both classical and quantum hardware. We shall use therefore high-level classical languages, such as *Python*, to write these instructions, knowing that at the end, everything will be translated into a series of sequential or parallel executions of quantum circuits and qubit measurements, with classical processing in between. In our example, we will write pseudo-code to find the ground state of a physical Hamiltonian. This involves initializing one or more quantum registers, defining the Hamiltonian, and executing a *quantum phase estimation* (QPE) subroutine. The output of the QPE primitive will be further processed, e.g. to translate a binary "phase" into a float point value of an "energy". The QPE primitive will be explained in Chapter 4.

Primitives. The QPE algorithm can be considered itself an algorithmic primitive that can be used by many types of quantum programs. At the level above, it is simply "called", but in reality it involves the execution of circuits and measurements. The QPE itself assumes the existence of other building blocks, such as controlled unitaries and the quantum Fourier transform (QFT). Other important primitives for quantum programming are: QFT, quantum arithmetic, finding expectation vales of operators, etc.

Circuit level. One step below, we find the actual circuits expressed at the logical gate level, such as one-qubit Pauli gates, one-qubit rotations, controlled rotations, SWAP, and CNOT gates. For instance, each primitive, needs to be developed into logic gate.

These three layers are usually the ones really visible to quantum algorithms developers. In our note, we will consider also one layer below, because it is important to provide a self-contained explanation about what are really the "atoms" of quantum computation, in both near-term and fault-tolerant regimes.

Gate synthesis. Not all logic quantum logic gates used at the circuit level are actually native to a given architecture. For instance, a controlled rotation $C - R_x$ gate, for superconducting qubits, needs to be expanded into CNOTs and single-qubit rotations as we will see in Chapter 2. More broadly, also in the fault-tolerant regime, gates need to be "compiled" using a smaller set of logical operations. For instance, a parametrized gate admits a (fairly) long expansion of discrete gates. This will also be discussed in Chapter 2 because it directly impacts runtimes. More details can be found in Ref. (10).

Finally, this layer also includes the so-called "transpilation". Similarly to classical computing compilation, a circuit can be optimized and simplified to reach shorter runtimes. In the NISQ regime, decreasing the number of gates is beneficial for decreasing the noise. Current quantum software platforms have built-in transpilers, so one does not need to worry about this.

Hardware mapping. At this level the quantum instruction finally becomes aware of the hardware. Superconducting chips have generally planar and local connectivity, e.g square, hexagon, heavy hexagon lattices. This means that if our program feature two-qubit gates that entangle two qubits which are not directly connected in the hardware, a sequence of SWAP operations needs to be inserted. The positive side is that in principle even an algorithm that requires all-to-all type of connectivity can be realized in a planar chip. The price to pay is that the effective depth of the algorithm, when mapped to a specific hardware, can be longer than naively estimated.

Pulse level. This is the lowest level and generally not visible to software developers. Gates require qubit control. This is achieved by sending a well defined sequence electromagnetic pulses of given waveforms. This is taken care by the low-level part of the quantum software, as much as it happens in conventional software engineering.

Bibliography

[1] M. A. Nielsen and I. L. Chuang, *Quantum Computation and Quantum Information: 10th Anniversary Edition*. Cambridge University Press, 2010.

[2] M. Reiher, N. Wiebe, K. M. Svore, D. Wecker, and M. Troyer, "Elucidating reaction mechanisms on quantum computers," *Proceedings of the National Academy of Sciences*, vol. 114, p. 7555–7560, 6 2017.

[3] R. Babbush, J. R. McClean, M. Newman, C. Gidney, S. Boixo, and H. Neven, "Focus beyond quadratic speedups for error-corrected quantum advantage," *PRX Quantum*, vol. 2, p. 010103, Mar 2021.

[4] P. Krantz, M. Kjaergaard, F. Yan, T. P. Orlando, S. Gustavsson, and W. D. Oliver, "A quantum engineer's guide to superconducting qubits," *Applied Physics Reviews*, vol. 6, no. 2, p. 021318, 2019.

[5] M. W. Johnson, M. H. Amin, S. Gildert, T. Lanting, F. Hamze, N. Dickson, R. Harris, A. J. Berkley, J. Johansson, P. Bunyk, *et al.*, "Quantum annealing with manufactured spins," *Nature*, vol. 473, no. 7346, pp. 194–198, 2011.

[6] M. Greiner, O. Mandel, T. Esslinger, T. W. Hänsch, and I. Bloch, "Quantum phase transition from a superfluid to a mott insulator in a gas of ultracold atoms," *nature*, vol. 415, no. 6867, pp. 39–44, 2002.

[7] A. G. Fowler, M. Mariantoni, J. M. Martinis, and A. N. Cleland, "Surface codes: Towards practical large-scale quantum computation," *Physical Review A*, vol. 86, no. 3, p. 032324, 2012.

[8] C. Gidney and A. G. Fowler, "Efficient magic state factories with a catalyzed $|ccz>$ to $2|t>$ transformation," *Quantum*, vol. 3, p. 135, 2019.

[9] F. Arute *et al.*, "Quantum supremacy using a programmable superconducting processor," *Nature*, vol. 574, no. 7779, pp. 505–510, 2019.

[10] T. Häner, D. S. Steiger, K. Svore, and M. Troyer, "A software methodology for compiling quantum programs," *Quantum Science and Technology*, vol. 3, no. 2, p. 020501, 2018.

Chapter 2

Qubits, gates, and circuits

This Chapter provides a reasonably self-contained introduction to gates and circuits, which constitute the minimal building blocks of quantum primitives and algorithms that we will see in the course.

2.1 Qubits and Hilbert spaces

Formally speaking, **one qubit** is a quantum two-level system, and can be represented by a two-dimensional complex vector

$$|q\rangle = \alpha\,|0\rangle + \beta\,|1\rangle = \alpha \begin{pmatrix} 1 \\ 0 \end{pmatrix} + \beta \begin{pmatrix} 0 \\ 1 \end{pmatrix} = \begin{pmatrix} \alpha \\ \beta \end{pmatrix} , \tag{2.1}$$

where we define $|0\rangle$ and $|1\rangle$ as the basis states of the two-dimensional complex vector space $\mathbb{C}^2$, and $\alpha, \beta \in \mathbb{C}$ are complex amplitudes satisfying the normalization condition, i.e. $|\alpha|^2 + |\beta|^2 = 1$. This condition ensures that the total probability of measurement outcomes sums up to 1. The two vectors $|0\rangle$ and $|1\rangle$ are normalized and mutually orthogonal:

$$\langle 0|0\rangle = 1, \quad \langle 1|1\rangle = 1, \quad \langle 0|1\rangle = 0, \quad \langle 1|0\rangle = 0. \tag{2.2}$$

Notice that the notation $|0\rangle$ and $|1\rangle$ has been introduced to carry the analogy with classical *bit* values. A different notation could have worked, e.g. $|\uparrow\rangle$ and $|\downarrow\rangle$. In fact, I suggest unfamiliar readers to pause here to be fully comfortable with the notation, as there are several 0s and 1s in Eq. 2.1.

Alternatively, the state of one qubit can be described as a point on the so-called Block sphere (cfn. Fig. 2.1).

$$|q\rangle = \cos[\theta/2]\,|0\rangle + \sin[\theta/2]e^{i\phi}\,|1\rangle\,, \tag{2.3}$$

where θ, ϕ are now two real-valued parameters. While formally a vector in $\mathbb{C}^2$ is defined by four real parameters, these are not independent: the normalization constraint and the global phase invariance cut down this number to two real independent real parameters.

Crucially, and in contrast to a classical bit, a qubit may be in an arbitrary superposition of its two basis states. This is what is meant by the commonly used sentence "a qubit can be 0 and 1 at the same time". However, even if α and β assume values in the continuum, the

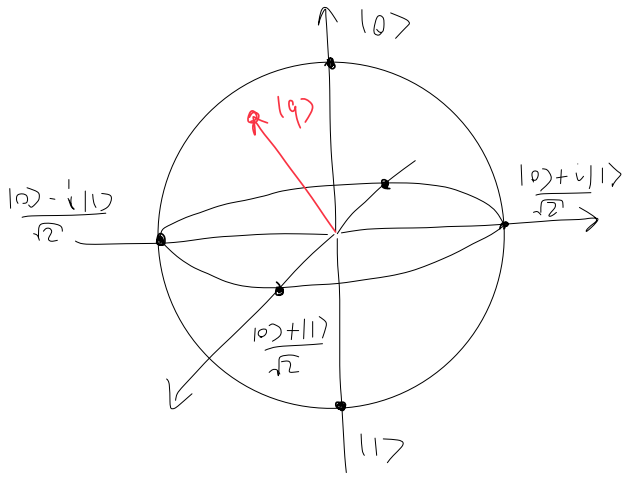

Figure 2.1: A qubit state as a point on the surface of the Bloch sphere.

.

information stored in a qubit can only be **retrieved by measurements**, hence converted into classical information. When measured, a qubit can "collapse" in its '0' value with probability $|\alpha|^2$, or in '1' with probability $|\beta|^2$. This is type of measurement is said to be *in the computational, or z basis*.

Notice also that it is not possible to reconstruct the starting state $|q\rangle$ only from the measurements in the computational basis. For instance, one could not resolve the state $|+\rangle = \frac{1}{\sqrt{2}}(|0\rangle + |1\rangle)$ from the state $|-\rangle = \frac{1}{\sqrt{2}}(|0\rangle - |1\rangle)$. Both cases are compatible with the measurement outcome "50% 0s, 50% 1s ". To distinguish between the two, we must perform an additional set of measurements in a different "direction". An additional complication is introduced by the measurement's statistical noise. The observed probability of measuring i.e. "0" converges to the expected value $|\alpha|^2$ only in a large number of measurements, or "shots", M limit. The statistical error decreases only as $M^{-1/2}$.

These concepts will be further explored when we will discuss how to measure the expectation values of operators, an essential building block of many algorithms.

The notation for two qubits generalizes as follows. Now the Hilbert space becomes four dimensional, spanned by the basis vector $|00\rangle, |01\rangle, |10\rangle, |11\rangle$ (cfn Sect 2.1.1). A general two-qubit state can be written in vector notation using this basis as

$$\alpha\,|00\rangle + \beta\,|01\rangle + \gamma\,|10\rangle + \delta\,|11\rangle \tag{2.4}$$

$$= \alpha \begin{pmatrix}1\\0\\0\\0\end{pmatrix} + \beta \begin{pmatrix}0\\1\\0\\0\end{pmatrix} + \gamma \begin{pmatrix}0\\0\\1\\0\end{pmatrix} + \delta \begin{pmatrix}0\\0\\0\\1\end{pmatrix} = \begin{pmatrix}\alpha\\\beta\\\gamma\\\delta\end{pmatrix}, \tag{2.5}$$

where $\alpha, \beta, \gamma, \delta \in \mathbb{C}$ are the component along these four orthonomal basis vectors, and also satisfy the usual normalization condition. It is important to notice that here we implicitely choose a convention about the ordering of the qubits! Some popular software development

tools use another convention, see Sect.2.3. So please keep this in mind when benchmarking the calculations of this Chapter using numerical tools.

More generally, the quantum state of n qubits can be represented by a complex-type vector of length 2^n. The state of a general n-qubit system can be an arbitrary superposition over all 2^n computational basis states, i.e.,

$$\sum_{q_1 q_2 \ldots q_n \in \{0,1\}^n} c_{q_1 \ldots q_n} |q_1 \ldots q_n\rangle = \sum_{i=0}^{2^n-1} c_i |i\rangle \,, \tag{2.6}$$

where we can define a short-hand notation for the basis state $q_1 \ldots q_n$ in its binary number format, i.e an integer i. For instance the basis state $|11\rangle$ can be labeled with $|3\rangle$. The complex amplitudes c_i satisfy the normalization condition $\sum_i |c_i|^2 = 1$.

From Eq. 2.6 we can see that a quantum state can encode any probability distribution that can be discretized on a grid of 2^n. However, specifying all coefficients c_i is impossible as soon as the number n increases. With just $n = 50$ qubits, one can encode a wavefunction that is formally defined by 2^{50} complex parameters, i.e 2×2^{50} independent real-valued parameters, therefore order of *petabyte* of equivalent memory in a classical computer.

2.1.1 Product and entangled states

The Hilbert space of a n-qubit system is the tensor product of n single qubit Hilbert spaces. If we consider two qubits (or generally two sub-systems) a and b, the Hilbert space of the composite system is product of the subsystems, $\mathcal{H} = \mathcal{H}_a \otimes \mathcal{H}_b$. The dimension of the final Hilbert space is the product of the dimensions of the subsystems one, in the two qubits case, four. Let us define $\{|a_i\rangle\}$ and $\{|b_j\rangle\}$ the orthonormal bases of $\mathcal{H}_a$ and $\mathcal{H}_b$, then every vector of the total system, belonging to $\mathcal{H}$ can be written in the form

$$|\psi\rangle = \sum_{ij} M_{ij}(|a_i\rangle \otimes |b_j\rangle), \tag{2.7}$$

where M_{ij} are complex coefficients. The shorthand notation for $|a_i\rangle \otimes |b_j\rangle$ is $|a_i\ b_j\rangle$, so we recover the "two-qubits" basis states introduced above, e.g. $|0\rangle \otimes |1\rangle := |01\rangle$. Interestingly, not all vectors in $\mathcal{H}$ belong to the same class.

Product states. Suppose two qubits are in single-qubit states each $|\alpha\rangle := \alpha_0 |0\rangle + \alpha_1 |1\rangle$ and $|\beta\rangle := \beta_0 |0\rangle + \beta_1 |1\rangle$, then the entire system is defined by the tensor product of the two individual states, which corresponds to the Kronecker product in vector notation, i.e.

$$|\psi\rangle = \begin{pmatrix} \alpha_0 \\ \alpha_1 \end{pmatrix} \otimes \begin{pmatrix} \beta_0 \\ \beta_1 \end{pmatrix} = \begin{pmatrix} \alpha_0\beta_0 \\ \alpha_0\beta_1 \\ \alpha_1\beta_0 \\ \alpha_1\beta_1 \end{pmatrix} \,. \tag{2.8}$$

or,

$$|\psi\rangle = \alpha_0\beta_0 |00\rangle + \alpha_0\beta_1 |01\rangle + \alpha_1\beta_0 |10\rangle + \alpha_1\beta_1 |11\rangle \,. \tag{2.9}$$

Crucially, not all two-qubit states can be written in this way, i.e. as a product of single-qubit states. These are called entangled states.

Entangles states. These vectors are not product states. While Eq. 2.7 gives the impression that every vector in $\mathcal{H}$ can be written as a product state, this is true only if the rank, i.e. the number of linearly independent rows or columns, of M_{ij} is 1. One can show that the 2×2 matrix M_{ij} constructed from the amplitudes in Eq. 2.8 has indeed rank 1.

For instance, Eq. 2.8 cannot represent the following vector (the reader is invited to check it)

$$|\psi\rangle = \frac{1}{\sqrt{2}}(|00\rangle + |11\rangle). \tag{2.10}$$

Indeed, the matrix M_{ij} has rank 2. Entangled states should necessarily be present in any meaningful quantum computation. Product states can be already realized by disconnected, non-interacting qubits.

2.1.2 Operators

An operator A is a linear map of the Hilbert space onto itself. For practical purposes, it is given by its matrix elements defined over a basis. For our qubits, this basis is the computational one

$$A = \begin{pmatrix} \langle 0| A |0\rangle & \langle 0| A |1\rangle \\ \langle 1| A |0\rangle & \langle 1| A |1\rangle \end{pmatrix} \tag{2.11}$$

In these notes, we will care about *hermitian* operators, i.e. $A = A^\dagger$, which are linked to observable quantities, such as the Hamiltonian, and *unitary* operators, i.e $A\, A^\dagger = A^\dagger\, A = I$, that represent single or multi-qubit gates. Traditionally, a generic unitary operator is denoted with the symbol U.

It is also important to define how *local* operators are written as operators acting on a larger Hilbert space. This is the basis of writing down the matrix representation of a quantum circuit.

Suppose that the operators A and B act respectively on the unentangled subsystems $|a\rangle$ and $|b\rangle$ respectively. The action of the the operator in $\mathcal{H}$ is:

$$(A \otimes B)(|a\rangle \otimes |b\rangle) = (A\,|a\rangle) \otimes (B\,|b\rangle) \tag{2.12}$$

Since any operator on $\mathcal{H}$ can be written as a sum of product operators, the above equation is sufficient to define the action of any operator on any state of $\mathcal{H}_a \otimes \mathcal{H}_b$. For instance, the unitary matrix of the CNOT gate cannot be written as $(A \otimes B)$ but as a sum of these terms.

If we define the usual basis for the two subsystems $\{|a_i\rangle\}$ and $\{|b_j\rangle\}$, and order them in lexicographically, i.e in ascending binary order, then the matrix form of the operator is given by the *tensor product*

$$\begin{bmatrix} a_{00}B & a_{01}B & \cdots \\ a_{10}B & a_{11}B & \\ \vdots & & \ddots \end{bmatrix} \tag{2.13}$$

Namely, the matrix B is nested inside a bigger matrix, multiplied by each element of A. If the two subsystems are two qubits, one concrete example can be following

$$(X \otimes I) = \begin{bmatrix} 0 & 1 \\ 1 & 0 \end{bmatrix} \otimes \begin{bmatrix} 1 & 0 \\ 0 & 1 \end{bmatrix} = \begin{bmatrix} 0 \begin{bmatrix} 1 & 0 \\ 0 & 1 \end{bmatrix} & 1 \begin{bmatrix} 1 & 0 \\ 0 & 1 \end{bmatrix} \\ 1 \begin{bmatrix} 1 & 0 \\ 0 & 1 \end{bmatrix} & 0 \begin{bmatrix} 1 & 0 \\ 0 & 1 \end{bmatrix} \end{bmatrix} = \begin{bmatrix} 0 & 0 & 1 & 0 \\ 0 & 0 & 0 & 1 \\ 1 & 0 & 0 & 0 \\ 0 & 1 & 0 & 0 \end{bmatrix} \tag{2.14}$$

where the X operator will be also better defined as "X gate" in the next Section. The total $(X \otimes I)$ operator, "flips" the first qubit and does nothing on the second one. As an exercise, we can check that the matrix formulation of the operation is consistent with the "physical" way to carry out the same process. Let's suppose that this operation acts on two qubits in their $|0\rangle$ state.

$$(X \otimes I)(|0\rangle \otimes |0\rangle) = X\,|0\rangle \otimes I\,|0\rangle = |1\rangle \otimes |0\rangle = |10\rangle \tag{2.15}$$

Following Eq. 2.8, the basis state denoted by $|10\rangle$ is the vector $(0010)^T$ in $\mathcal{H}$. This is the same outcome that we receive if we perform the matrix-vector multiplication, using the right-hand side matrix in Eq 2.14, and the basis vector $(1000)^T := |00\rangle$.

Turns out that a quantum circuit is just a very big linear algebra problem. And this is indeed what classical emulators of quantum computation are doing. Under this perspective, it is also easy to understand that simulating classically a general quantum circuit, made of L qubits, becomes exponentially costly in memory and runtimes, as it requires handling matrices of size $2^L \times 2^L$.

2.1.3 Projectors

In the following chapters we will make use of projectors, which we formally define here as operators that select a given component of a quantum state. For instance, the projector P_i,

$$P_i = |i\rangle \langle i|\,, \tag{2.16}$$

applied to Eq. 2.6 gives $P_i\,|\psi\rangle = c_i\,|i\rangle$. They satisfy the properties

$$P^2 = P, \quad P^\dagger = P, \tag{2.17}$$

and their eigenvalues are either 0 or 1. This follow from the above property.

2.2 Quantum gates

2.2.1 One qubit gates

After this mathematical digression, we can safely introduce quantum gates. A one-qubit quantum gate is a unitary operator on the Hilbert space of one qubit, that, following the above consideration, can be represented by a 2×2 matrix. Here we list the most common gates, which also include the "Pauli gates", I, X, Y, Z.

$$I = \begin{bmatrix} 1 & 0 \\ 0 & 1 \end{bmatrix}, \quad X = \begin{bmatrix} 0 & 1 \\ 1 & 0 \end{bmatrix}, \quad Y = \begin{bmatrix} 0 & -i \\ i & 0 \end{bmatrix}, \quad Z = \begin{bmatrix} 1 & 0 \\ 0 & -1 \end{bmatrix}, \tag{2.18}$$

The qubit basis $|0\rangle$, $|1\rangle$ are eigenvectors of the Z operator. This is why the computational basis, is also called z-basis. Other important gates are:

$$\mathsf{H} = \frac{1}{\sqrt{2}} \begin{bmatrix} 1 & 1 \\ 1 & -1 \end{bmatrix}, \quad \mathsf{T} = \begin{bmatrix} 1 & 0 \\ 0 & e^{i\pi/4} \end{bmatrix}, \quad \mathsf{S} = \begin{bmatrix} 1 & 0 \\ 0 & i \end{bmatrix}. \tag{2.19}$$

These first seven gates share a common pattern: they are *discrete* gates. The H gate is called *Hadamard* gate. Among these, the$\mathsf{T}$gate is infamously known to be the most expensive one

to realize in the fault-tolerant regime. Indeed, using a surface code for error correction, T gates consume special states, called *magic states*,(1) which require many qubits and many surface code cycles. As a surface code cycle requires frequent measurements for all gates, the gate time of a T operation is the longest one(2). As we will see, the T-gate may look exotic and far from concrete applications, but in reality it is central to realize many useful gates.

As a matter of fact, quantum resource estimates for fault-tolerant algorithms, use the *T-count* or the *T-depth* as a proxy to estimate runtimes (see e.g this paper that provides end-to-end resource estimate for a quantum algorithm useful for finance(3)).

Parametrized gates. These gates are also crucial for quantum algorithms, as they allow to "rotate" arbitrarily the state of a qubit. The rotation operators are generated by exponentiation of the Pauli matrix $\sigma \in \{X, Y, Z\}$ according to

$$e^{-i\sigma\theta} = \cos[\theta]I - i\sin[\theta]\sigma \tag{2.20}$$

The three rotations gates, of a angle θ are given by the following matrices

$$R_X[\theta] = \begin{bmatrix} \cos[\frac{\theta}{2}] & -i\sin[\frac{\theta}{2}] \\ -i\sin[\frac{\theta}{2}] & \cos[\frac{\theta}{2}] \end{bmatrix}, R_Y[\theta] = \begin{bmatrix} \cos[\frac{\theta}{2}] & -\sin[\frac{\theta}{2}] \\ \sin[\frac{\theta}{2}] & \cos[\frac{\theta}{2}] \end{bmatrix}, R_Z[\theta] = \begin{bmatrix} e^{-i\frac{\theta}{2}} & 0 \\ 0 & e^{i\frac{\theta}{2}} \end{bmatrix}, P[\theta] = \begin{bmatrix} 1 & 0 \\ 0 & e^{i\theta} \end{bmatrix}. \tag{2.21}$$

We also include the *phase* gate, that is equivalent to a RZ gate up to a phase factor $P[\theta] = e^{i\frac{\theta}{2}} R_Z[\theta]$.
Notice the factor $\theta/2$ in the definition of the gate!

Useful gate identities. Many algebraic identities can be proved and may be useful when constructing, understanding and low-level compiling circuits. For instance, $\mathsf{S} = \mathsf{T}^2$, $\mathsf{H} = (X + Z)/\sqrt{2}$, $XYX = -Y$, $\mathsf{H}\ X\ \mathsf{H} = Z$, and so on.. For instance, the latter identity will be useful to perform a *change of basis*, as much as $\mathsf{H}\ Z\ \mathsf{H} = X$.

Here we also provide identities involving rotations. In particular, a unitary operation U on a single qubit, can be expressed as a sequence of rotations and a phase

$$U = e^{i\alpha} R_z(\beta) R_y(\gamma) R_z(\delta), \tag{2.22}$$

where $\alpha, \beta, \gamma, \delta$ are real parameters. Finally, we also include an identity which is very useful in practice, and follows from Eq. 2.22. Given, again, a single qubit unitary U, there exist three single qubit operators, A, B, C and a real parameter α, such that

$$ABC = I, \tag{2.23}$$

$$e^{i\alpha} AXBXC = U \tag{2.24}$$

2.2.2 Gate synthesis, logical vs parametrized gates

As we have seen, some of the elements of the one-qubit set of gates presented above are "redundant". For instance, the R_X gate can be substituted by the following operation $R_X = \mathsf{H} R_Z H$, which follows from the above $\mathsf{H}\ Z\ \mathsf{H} = X$ identity. Indeed, real hardware are usually limited to a smaller set of *physical gates*, that can be engineered as a sequence of pulses, and

that are used to "synthesize" other gates (cfn. Sec. 1.3) Interestingly, in the case of IBM Quantum hardware, all one qubit gates are compiled using the minimal set of I, X, R_Z and $SX = \frac{1}{2}\begin{bmatrix} 1+i & 1-i \\ 1-i & 1+i \end{bmatrix}$ gates.

The need of compiling one-qubit gates using a smaller set will hold also in fault-tolerant-hardware as fault-tolerant operations are typically available only for a limited number of gates. Indeed, you may have noticed the apparent contradiction of having gates, which are parametrized by a countinuos parameter, listed as possible building block of a digital quantum computer. Indeed, in the previous section we motivated the need to go beyond quantum simulators, exactly because continuos operation cannot be error corrected.

In NISQ setting, a qubit rotation can be easily realized by driving the qubit with a well definite pulse shape, realizing the θ-rotation. However, calibration errors will likely realize an imperfect gate: 1) the rotation angle will be affected by an unpredictable error $\theta + \delta\theta$, 2) the rotation axis can also suffer from error, in such a way that e.g. the intened R_Z rotation operation may have spurious components $R_Z + \epsilon R_X + \epsilon' R_Y$.

Fault-tolerant computers needs to realize a **digital rotation** as much as classical computers do. It is possible to convince ourselves that it is possible to generate rotations of arbitrary angles by using e.g. only H and T discrete gates. For instance, already the TH operation generate a rotation of an angle which is not an exact divisor of 2π. It follows by definition that T is a rotation of $\pi/4$ on the z-axis, and it can be seen that the H gate can also be understood as a π rotation, about the vector $\vec{h} = (\vec{x} + \vec{z})/\sqrt{2}$. The rotation $R_{\vec{n}}(\theta)$ produced by this operation is

$$R_{\vec{n}}(\theta) = R_{\vec{h}}(\pi) \times R_{\vec{z}}(\pi/4). \tag{2.25}$$

The resulting angle θ can be found from the following general formula:

$$\cos(\theta/2) = \cos(\theta_1/2)\cos(\theta_2/2) - \vec{n}_1\vec{n}_2 \sin(\theta_1/2)\sin(\theta_2/2) \tag{2.26}$$

. Inserting the specific values we get

$$\cos(\theta/2) = \cos(\pi/2)\cos(\pi/8) - \frac{1}{\sqrt{2}}\sin(\pi/2)\sin(\pi/8) = -\frac{1}{\sqrt{2}}\sin(\pi/8) \tag{2.27}$$

. The solution $\theta \approx 1.096$ is an irrational divisor of 2π. Therefore, repeated application of the sequence TH will never produce an angle which is multiple of 2π. Starting with the appropriate state, that can be prepared with just H or T gates, it is possible to reach any point in the Bloch sphere with arbitrary precision, without continuous rotations. As an example, it can be shown that a rotation by an angle $\pi/8$ admits the following expansion in terms of H, T, S, X gates: HTHTSHTSHTSHTSHTHTSH THTHTSHTHTSHTHT HTSHTSHTSHTSHTSHT SHTSHTSHTSHTHTSHTH TSHTHTHTSHTSHT SHTHTHTHTSHTSHTHTSHX to attain an error of 10^{-4}(see (4)).

One can already see that, while continuous rotations are very simple and fast operation in NISQ regime, they become very long and complex in fault-tolerant-regime, with a T-depth that depends on the required accuracy.

This example is a specific instance of the more general **Solovay-Kiteav theorem**, perhaps one of the most fundamental results enabling quantum computation. The theorem

provides an upper bound for the number of gates required to achieve a desired accuracy in the realization of an arbitrary gate. Indeed, a quantum circuit of m gates can be approximated with an error ε by a quantum circuit of depth $\mathcal{O}(m \log^c[m/\varepsilon]$ made of gates from a desired finite universal gate set(5).

2.2.3 Two qubit gates

Since one-qubit gates cannot produce entangled states, as by definition a product state remains a product state under the action of a tensor product of one-qubit gates, we need to introduce at least one genuine two-qubit gate to perform quantum computation.

Let's consider a two qubit system $|c\rangle \otimes |t\rangle = |c\ t\rangle$, i.e where the first qubit is in the *control* state c, and the second is in a *target* state t. Then, following this *ordering* the **CNOT gate** is defined via:

$$\mathsf{CNOT} = \begin{bmatrix} 1 & 0 & 0 & 0 \\ 0 & 1 & 0 & 0 \\ 0 & 0 & 0 & 1 \\ 0 & 0 & 1 & 0 \end{bmatrix} \tag{2.28}$$

The CNOT operator leaves unchanged the state of the control qubit but it "flips" the target qubit. Component-wise this operation swaps the $|10\rangle$ component with the $|11\rangle$ one. This operation can be also called *controlled X* or C-X operation. Notice also that the matrix form of the CNOT crucially depends on the ordering of the qubits. If the control qubit is the right-most one, then the matrix is different. This is one of the most trivial errors that one can do when approaching quantum circuits and reading different sources, or using different software packages that assume different qubit's ordering.

The CNOT gate is usually denoted in quantum circuits with the following symbol

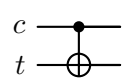

where the upper(lower) qubit is the control(target). The CNOT gate is the minimal operation wherw we can appreciate superposition in action. Indeed, the control qubit may be in superposition, such that, loosely speaking, you control and do not control at the same time. As we will see, this minimal example is able to prepare the Bell state.

Another important two qubit gate is the **SWAP gate**. The operation it performs is the following

$$\mathrm{SWAP}\,|ab\rangle = |ba\rangle \tag{2.29}$$

and is mathematically represented by the following matrix,

$$\mathrm{SWAP} = \begin{bmatrix} 1 & 0 & 0 & 0 \\ 0 & 0 & 1 & 0 \\ 0 & 1 & 0 & 0 \\ 0 & 0 & 0 & 1 \end{bmatrix}. \tag{2.30}$$

This gate is essential when an ideal circuit, which is designed with arbitrary connectivity in mind, needs to be embedded in a chip with local connectivity. This gate can be "compiled"

into a sequence of three CNOTs.

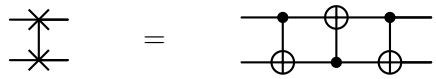

This is the first *circuit identity* we see in these notes. Other two-qubit gates can be introduced as needed in the following Chapters, for the time being these two gates are enough for our purposes.

2.3 Circuits and circuit emulators

A quantum circuit is a graphical model to describe the sequence of operations performed on a qubit register. A circuit features *gates* and *wires*. The *evolution* of a qubit state is depicted by a horizontal line. Time flows from left to right. Therefore the horizontal lines are not physical wires but represent the qubit, or a qubit register, during the computation.

Vertical lines connecting qubits imply an interaction between them (cfn. the CNOT gate). One-qubit gates are usually depicted by a "box" containing the letter specifying the gate. Bigger boxes encompassing multiple qubits denote an unspecified multi-qubit operation.

Classical bit registers are denoted by doubled line. These are typically used, to formally store results of a measurement, and are often neglected unless there is a specific reason to include them, i.e. a non-trivial quantum-classical feedback operation, like applying a gate to qubit i conditionally to a given measurement outcome of qubit j.

Finally, measurements operation, which is not described by a unitary gate, are depicted with a special symbol. Notice that not all qubit needs to be measured at the end of the circuit.

An illustrative example of a quantum circuit is plotted below (Fig 2.2). It is perhaps useful to refresh the notation concerning the order of the operations and the qubit ordering.

The time flows from left to right, so the initial state is $(|0\rangle \times |\psi\rangle)$, if we assume the *convention of assigning to the upper most qubit, the leftmost place in the ordering of the tensor product*. This is called the big-endian convention. It is important to notice this, because some software packages, like Qiskit, use the opposite convention. This impact the definition of the CNOT matrix for instance, as well as the matrix format of any tensor product of operators. In case you want to validate your understanding using quantum circuit emulators, this is certainly something to keep in mind when reading the output wavefunction.

To recap: big-endian convention for the tensor product $|abc\rangle = |a\rangle \otimes |b\rangle \otimes |c\rangle$ assumes that the state $|a\rangle$ is qubit 0, i.e. q_0. Little-endian convention instead assigns the state $|c\rangle$ to the qubit register 0. Clearly, this choice only impacts the classical emulation of the circuit. Quantum mechanics is invariant under the re-labeling of the qubits.

Notice that here, to draw the most general setting, we assumed that the second qubit has already been initialized in arbitrary one-qubit state $|\psi\rangle = (\psi_0, \psi_1)^T$. After the initialization, the following operations are applied, in this order: $(\mathsf{H} \otimes T)$, CNOT, (C-U_1), and U_2. This means that the final state is

$$|\phi_{final}\rangle = U_2 \; CU_1 \; \mathsf{CNOT} \; (\mathsf{H} \otimes T) \, |0 \; \psi\rangle \, . \tag{2.31}$$

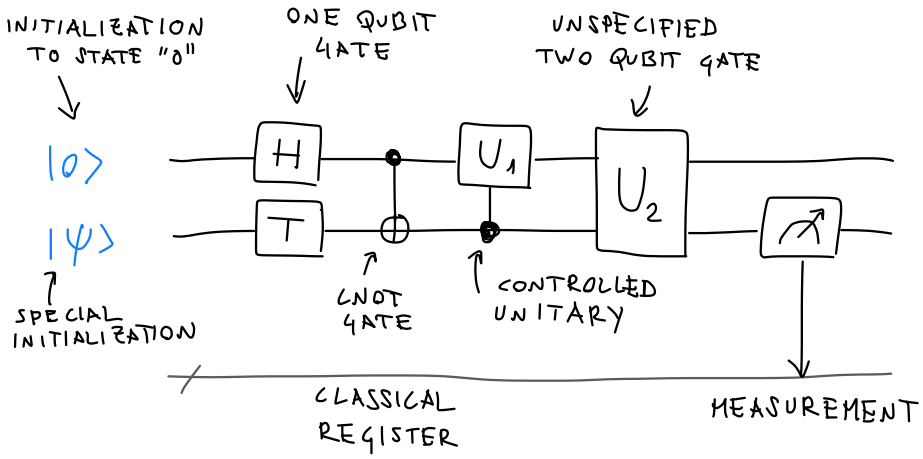

Figure 2.2: A generic quantum circuit featuring a two-qubit register and a classical register. The circuit is made of two single-qubit gates, a CNOT gate, a controlled unitary gate (C-U_1), where the second qubit controls the first, and a generic two-qubit operation U_2. Finally the second qubit is measured on the computational basis, and the measurement outcome is stored in a classical bit register.

.

Classical circuit emulators implement this chain of linear algebra operations. For instance, the first two steps are represented by the following

$$\mathsf{CNOT}\ (\mathsf{H} \otimes T)\,|0\ \psi\rangle = \frac{1}{\sqrt{2}} \begin{bmatrix} 1 & 0 & 0 & 0 \\ 0 & 1 & 0 & 0 \\ 0 & 0 & 0 & 1 \\ 0 & 0 & 1 & 0 \end{bmatrix} \begin{bmatrix} 1 & 0 & 1 & 0 \\ 0 & e^{i\pi/4} & 0 & e^{i\pi/4} \\ 1 & 0 & -1 & 0 \\ 0 & e^{i\pi/4} & 0 & -e^{i\pi/4} \end{bmatrix} \begin{bmatrix} \psi_0 \\ \psi_1 \\ 0 \\ 0 \end{bmatrix}. \tag{2.32}$$

A final note about **measurements**. Suppose that the final output state is $|\phi_{final}\rangle = (\phi_0, \phi_1, \phi_2, \phi_3)^T = (\phi_{00}, \phi_{01}, \phi_{10}, \phi_{11})^T$. Let's recall for the last time that, while in a classical emulator (e.g. linear algebra processor) we have access to the full statevector, i.e. all four components, in real quantum hardware we can only infer the quantum state through measurements. If we measure all qubits, then we could measure the normalized frequency count of all four-bit strings '00','01','10', and '11'. In this example we only measure the second qubit, therefore we expect our output to be either a '0' or a '1'. From the definition, and given the big-endian convention, the probabilities to measure '0' or '1' on the *second* qubit are

$$P(0) = |\phi_{00}|^2 + |\phi_{10}|^2, \quad P(1) = |\phi_{01}|^2 + |\phi_{11}|^2. \tag{2.33}$$

Measurements can be classically emulated by drawing samples from the vector of the squared amplitudes. It is often crucial to assess how many measurements M are needed to resolve with the required accuracy the desired output. This is particularly compelling when one needs to evaluate the expectation value of an operator,

$$\langle A \rangle = \langle \phi | \, A \, | \phi \rangle \,. \tag{2.34}$$

A classical emulator can evaluate this "exactly" from a vector-matrix-vector operation. Traditionally, in literature, this is called *statevector* emulation mode. A quantum computer, as we will see, needs to use measurements in potentially several bases to evaluate this quantity.

Finally, we notice in Fig. 2.2 the presence of a big box, labeled as U_2. Sometimes, these black boxes are called **oracles**. These are operations where one knows the intended input-output mapping, but, in the most general case, a given circuit implementation is not available or not specified.

2.3.1 Oracles

Besides the above definition as "unspecified" unitary, oracles are often used as building blocks to many textbook quantum algorithms, such as Grover's algorithm. The usage of oracles allows quantum information theorists to develop new codes, without worrying about details. However, it is implied that the execution of oracles is the most time-consuming part of the algorithm, such that the complexity of these quantum algorithms is often given as the number of *oracle calls*. When a concrete circuit implementation of said oracle is available, one can simply multiply the number of T-gates per oracle by the number of oracle calls per circuit, to get a reasonable runtime estimate.

Roughly speaking, oracles are the quantum way to perform $f(x)$'s without sacrificing unitarity. Let's assume we want to implement a *known* function $f : \{0,1\}^n \to \{0,1\}^m$, that acts on a n-bit input $x = x_0 x_1 \cdots x_n$ and product a m-bit output $f(x) = f_0 f_1 \cdots f_m$. For instance, $x = 5$ and with a register size $n = 4$ could be represented by the binary encoding 0101.

The first problem is that n and m can be different so the operation has a different number of qubits incoming and outgoing. However, this could be fixed by assuming the two registers of the same size of $\max[n, m]$. The real issue is that defining the action of the oracle as $U|x\rangle = |f(x)\rangle$ would be still incorrect. If the function $f(x)$ is not invertible, one cannot safely **reverse the operation**, i.e cannot construct the $O^\dagger$.

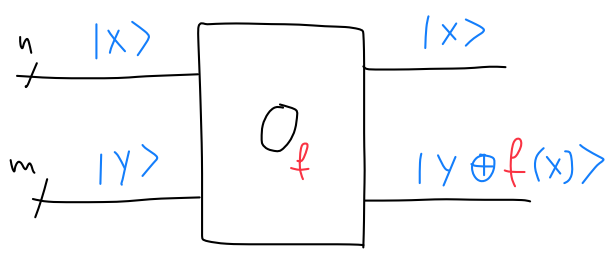

Figure 2.3: A generic circuit drawing of a Boolean oracle, O_f implementing the classical function f.

.

To solve this conundrum, one needs to construct and allow for two registers, the input one, of size n, and an output one of size m, which is initialized on a m-bit zero state$|0\rangle$. After the operation, the input register still stores the input value x, while the output stores $f(x)$. In this way, the operation is reversible, since the input also "survives" the operation. This

choice is still not fully satisfactorily because it requires a fixed input in the second register. To allows for a real unitary operation, the output register should be in an arbitrary state $|y\rangle$, and is changed into $|y \oplus f(x)\rangle$, where $\oplus$ denotes the addition modulo 2 (or XOR). These oracles, that require this two-register structure are called *Boolean oracles* (shown in Fig. 2.3).

From a complexity theory perspective, if $f(x)$ can be implemented efficiently using a classical computer, then the corresponding oracle O_f is also efficient. This is often enough for quantum information scientists.

However, being efficient, i.e. non-exponentially scaling, is not a guarantee for practicality as discussed in Chapter 1. The branch of quantum information devoted to the investigation of practical ways to implement *reversible* mathematical operations, at the circuit level, is called **quantum arithmetic**.

2.3.2 Controlled operations

After these basic definitions we are in the position to define circuit identities and general controlled gates. Moreover, we can revisit the CNOT under this "oracular" perspective, which may be useful.

We can see the control qubit as the input register and the target one as the output as in Fig. 2.3. Then the CNOT can be understood as two-qubit Boolean oracle implementing the function $f(x) = x$. The action of the CNOT gate is

$$\mathsf{CNOT}\,|x\rangle\,|y\rangle = |x\rangle\,|y \oplus x\rangle \tag{2.35}$$

If we apply the CNOT gate to $|x\rangle\,|0\rangle$ we obtain $|x\rangle\,|x\rangle$. This procedure is called *entangled copy*.

The CNOT gate is a controlled X gate, and it can be generalized to other unitaries U. A controlled U, C-U, gate, where U is a single qubit gate, and assuming our standard qubit ordering is charaterized by the following operator, circuit symbol, and matrix:

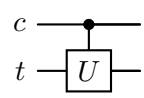

(2.36)

$$C - U = |0\rangle\,\langle 0|\,I + |1\rangle\,\langle 1|\;\; U = \begin{bmatrix} 1 & 0 & 0 & 0 \\ 0 & 1 & 0 & 0 \\ 0 & 0 & u_{00} & u_{01} \\ 0 & 0 & u_{10} & u_{11} \end{bmatrix} \tag{2.37}$$

Controlled rotations are not native gates, but can be prepared using CNOT and one-qubit rotations.

In these note we will consider, as illustrative example, controlled single-qubit unitaries. The identity of Eq. 2.23 is useful to derive the circuit decomposition for controlled operations. The first step is to understand that a controlled phase shift on the target qubit is equvalent to placing a phase gate $P(\alpha)$ (cfn. Eq. 2.2.1). Now, it is easy to understand that the circuit in Fig. 2.4 realized the condition that the unitary is not applied when the control qubit is in '0', because $ABC = I$. Instead, when the control qubit is in '1', the presence of CNOT gates (which are C-X gates) implies that the effective sequence of operations applied to the

target qubit are $AXBXC$. Moreover, when the control qubit is in '1', then the phase $e^{i\alpha}$ is applied, thus realizing the unitary U.

Now, in special and relevant cases, i.e $U = R_z$ and U $= R_y$ rotations, the circuit further simplifies. And it is possible to guess the operators A, B, C without much mathematical steps. The idea here is to perform two half-rotations in different direction. In one case, they will cancel out, in the other case the will add up.

Notice however, that this simplified circuit is not valid for controlled R_x rotations. In this case the general construction is needed[1]

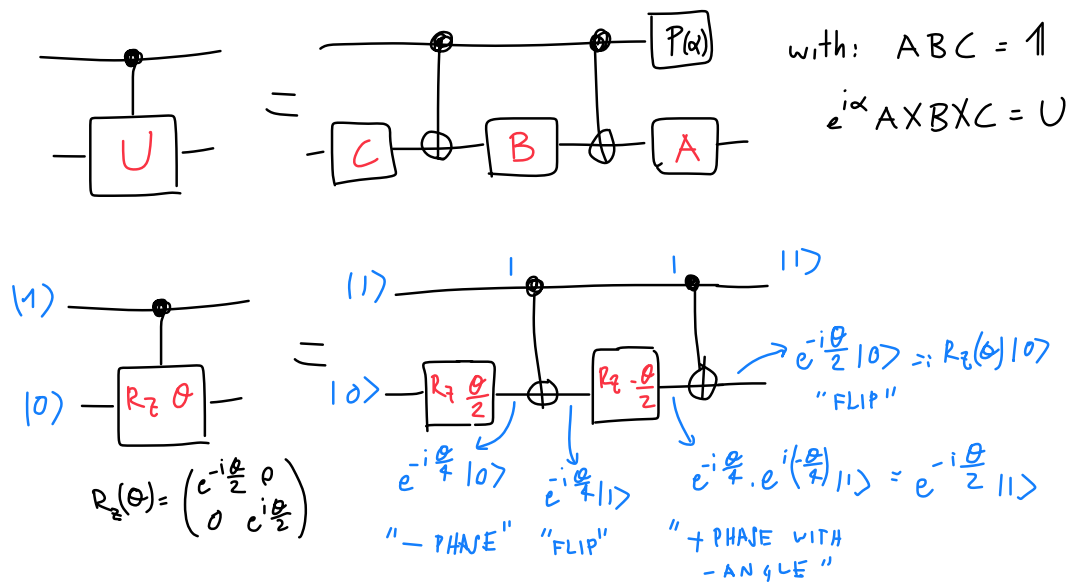

Figure 2.4: Upper circuit: circuit equivalence for a generic single qubit controlled-U gate. Lower circuit: particular example of a $C - R_z$ rotation, with all intermediate states, for the input state $|1\rangle \otimes |0\rangle$, that is mapped to the $|1\rangle \otimes R_z(\theta)\,|0\rangle$. The reader is encouraged to try it out with the other three basis states.

.

The circuit is shown in lower panel of Fig. 2.4 for the special case of R_z gate. It is instructive to keep track of the state transformation at each step of the circuit evolution, to convince ourselves that the circuit is indeed producing the intended output. As we will see, this "sandwich of CNOTs" structure is a recurring pattern in many algorithms.

Finally, we also introduce the **Toffoli** gate, which is the first example of a genuine three-qubit gate. This gate that flips the last qubit only when the first two qubits are '1'. The action of this operator is

$$|x_1\rangle\,|x_2\rangle\,|y\rangle = |x_1\rangle\,|x_2\rangle\,|y \oplus x_1\ x_2\rangle\,, \tag{2.38}$$

[1]Exercise: find the operators A, B, C in this case. Hint: it is not qualitatively different from the previous cases.

and represents the reversible version of the conventional AND operation. Moreover, the Toffoli gate can also simulate the NAND operation, so we can transform in principle any classical circuit into a quantum one, using Toffoli gates.

2.3.3 Universal gate sets

A *universal* gates set can **approximate any unitary transformation** on any number of qubits up to any desired precision. Differently from the classical case, the number of elements in this set is greater than one.

Adapting the exposition by S. Aaronsoon, one can intuitively understand why this is the case. For instance, the gate set must create interference and superposition, so it must go beyond a simple CNOT, which cannot create superposition starting from a basis state.

Single qubit rotations, or the Hadamard, may create superpositions but cannot create entanglement. So, a mixture of one and two qubit gates is needed.

Moreover there must be at least one gate to span the imaginary space, like the phase gate of Eq. 2.19. However, even the set $\{\mathsf{CNOT}, \mathsf{H}, \mathsf{S}\}$ that fulfill these requirements is still not universal. This set is called *Clifford* set, as they can generate any gate in the Cliffor group, e.g. the Pauli gates. The Gottesman-Knill Theorem proves that the Clifford set is not universal, as it cannot approximate arbitrarily good and with a finite set of operations all other possible gates. The theorem also shows that quantum circuit using only the Clifford set can be simulated efficiently on a classical computer. This may appear conterintuitive, as one can generate highly entangled states using Clifford gate.

It turns out that there exist many universal gate sets. For instance, $\{\mathsf{CNOT}, R_x(\pi/4), \mathsf{S}\}$, $\{\text{Toffoli}, \mathsf{H}, \mathsf{S}\}$, or $\{\text{Clifford}, T\}$ are universal. Currently the two most popular universal gate sets are the ones made of CNOT and single qubit rotations, which is widely used in NISQ era

$$\{R_x(\theta), R_y(\theta), R_z(\theta), \mathsf{S}, \mathsf{CNOT}\}, \tag{2.39}$$

and the Clifford+ T set, which is more popular in fault-tolerant algorithms

$$\{\mathsf{CNOT}, \mathsf{H}, \mathsf{S}, \mathsf{T}\}. \tag{2.40}$$

The Solovay-Kitaev theorem then assure us that we can approximate all the other gates using an efficient number of operation taken from these sets. In Sect.2.2.2, for instance, we gave an example about constructing continuos rotations using the Clifford+ T set.

2.4 Measuring operators

Many quantum algorithms require the evaluation of

$$\hat{O} = \langle\psi| O |\psi\rangle \tag{2.41}$$

.

We stress once again that in a real setting we cannot access all the components of the state $|\psi\rangle = (\psi_0, \psi_1, \cdots, \psi_{2^N-1})^T$ and therefore the above cannot be computed using linear algebra operations[2]

[2] it could be in the emulation of quantum computation, which is however, exponentially costly.

Similarly to quantum Monte Carlo, one needs to sample from $|\psi|^2$ introducing a statistical error. Let's consider first the case of a diagonal operator, Z and one qubit. From the definition we have

$$\hat{Z} = \langle\psi| O |\psi\rangle = \begin{bmatrix}\psi_0^* & \psi_1^*\end{bmatrix} \begin{bmatrix}1 & 0\\ 0 & -1\end{bmatrix} \begin{bmatrix}\psi_0\\ \psi_1\end{bmatrix} = |\psi_0|^2 - |\psi_1|^2 = \text{Prob}(\sigma_z = 0) - \text{Prob}(\sigma_z = 1), \tag{2.42}$$

namely, the differences of the normalized frequency counts of the readout '0' and '1'. Notice also that, a number M of repetitions, i.e. state preparations + measurement, is needed to compute $\hat{Z}$.

It is already clear that the expectation value of Z on the state $|+\rangle = 1/\sqrt{2}\ (1\ 1)^T$, if estimated empirically, will be 0 only within statistical error, which decreases with $1/\sqrt{M}$.

2.4.1 Measuring non-diagonal operators

To measure arbitrary single-qubit operators one needs to perform additional operations. Suppose that we want to measure the expectation value of $\langle\psi|X|\psi\rangle$: we make use of the following identity:

$$X = H\ Z\ H, \tag{2.43}$$

which can be verified using the definition of Sect 2.2.1. This means that the expectation value $\langle\psi|X|\psi\rangle$ is equivalent of the expectation value of the operator Z taken on the *rotated* state $|\psi'\rangle = |\mathsf{H}\psi\rangle$, because $\langle\psi|X|\psi\rangle = \langle\psi|\mathsf{H}Z\mathsf{H}|\psi\rangle = \langle\psi'|Z|\psi'\rangle$. All in all, to measure the X operator, one simply need to place an Hadamard gate before the measurement in the computational basis.

Similarly, measurements in the Y basis can be performed using the following gate

$$K = \frac{1}{\sqrt{2}} \begin{bmatrix}1 & -i\\ 1 & i\end{bmatrix} = \mathsf{H}S^\dagger \tag{2.44}$$

which has not a well defined name, but in our notes will we label it with K. Similarly the $R_x(\pi/2)$ gate can be used. While $R_x(\pi/2) \neq K$, it is possible to show that $R_x(\pi/2)^\dagger Z R_x(\pi/2) = R_x(-\pi/2) Z R_x(\pi/2) = Y$, as much as $S\mathsf{H}Z\mathsf{H}S^\dagger = Y$

2.4.2 Measuring multi-qubits and non-diagonal operators

The next step is the ability to calculate expectation values of correlators such as ZZ, or XX. It follows the definition of the operator ZZ that the practical way to calculate the expectation value from samples is the generalization of Eq. 2.45, where we check the *parity* of the readout string. If we suppose that the systems is also made of two-qubits

$$\langle\psi| ZZ |\psi\rangle = \begin{bmatrix}\psi_{00}^* & \psi_{01}^* & \psi_{10}^* & \psi_{11}^*\end{bmatrix} \begin{bmatrix}1 & 0 & 0 & \\ 0 & -1 & 0 & 0\\ 0 & 0 & -1 & 0\\ 0 & 0 & 0 & 1\end{bmatrix} \begin{bmatrix}\psi_{00}\\ \psi_{01}\\ \psi_{10}\\ \psi_{11}\end{bmatrix} = \tag{2.45}$$

$$= |\psi_{00}|^2 - |\psi_{01}|^2 - |\psi_{10}|^2 + |\psi_{11}|^2 = \tag{2.46}$$

$$= \text{Prob}(\sigma = 00) - \text{Prob}(\sigma = 01) - \text{Prob}(\sigma = 10) + \text{Prob}(\sigma = 11), \tag{2.47}$$

(2.47)

i.e when two spins which are parallel (anti-parallel) they contributes with a $+$ $(-)$ sign to the overall sum over the sampled strings σ. This rule generalizes i.e. to the calculation of operator such as $ZZIIZ$: in this case the string $'11111'$ count contributes with a $-$ sign because qubits 0 and 1 are parallel, but qubit 4 is read out in its $'1'$ state (which has eigenvalue -1). The readout of the qubits 2 and 3 is irrelevant because there the identity operator is applied.

The more general case of a generic Pauli string operator, tensor product of arbitrary single qubit Pauli operator is treated similarly to the single-qubit case. One needs to find a unitary operator U, such that

$$P = U^\dagger P^{\text{diag}} U, \tag{2.48}$$

where P^{diag} is a tensor product of diagonal Pauli matrices Z, I, where the occurence of identity operators in P are left unchanged in P^{diag}. For instance, the operator $XX = X \otimes X$ can be measured using $U = \mathsf{H} \otimes \mathsf{H}$ and $P^{\text{diag}} = ZZ$. Similarly, the operator $XIYY$, can be measured using $U = \mathsf{H} \otimes I \otimes K \otimes K$ and $P^{\text{diag}} = ZIZZ$.

Measurement of (linear combination of) Pauli strings is an essential step of one of the most commonly used quantum algorithms, the variational quantum eigensolver (VQE). Luckily, most quantum software packages enable an automatic generation of these "measurements" circuits, i.e. appending the required gates at the end of the state preparation circuit. These are sometimes called *post-rotations*.

Bibliography

[1] S. Bravyi and A. Kitaev, "Universal quantum computation with ideal clifford gates and noisy ancillas," *Physical Review A*, vol. 71, no. 2, p. 022316, 2005.

[2] A. G. Fowler, M. Mariantoni, J. M. Martinis, and A. N. Cleland, "Surface codes: Towards practical large-scale quantum computation," *Physical Review A*, vol. 86, no. 3, p. 032324, 2012.

[3] S. Chakrabarti, R. Krishnakumar, G. Mazzola, N. Stamatopoulos, S. Woerner, and W. J. Zeng, "A Threshold for Quantum Advantage in Derivative Pricing," *Quantum*, vol. 5, p. 463, June 2021.

[4] T. Häner, D. S. Steiger, K. Svore, and M. Troyer, "A software methodology for compiling quantum programs," *Quantum Science and Technology*, vol. 3, no. 2, p. 020501, 2018.

[5] C. M. Dawson and M. A. Nielsen, "The solovay-kitaev algorithm," *arXiv preprint quant-ph/0505030*, 2005.

Chapter 3

Quantum annealing

3.1 A quantum device for classical optimization

These notes will primarily focus on the digital version of quantum computation due to its power and potential for error correction. However, it's important to review quantum annealing and the capabilities of analog quantum devices for historical context and to establish useful concepts for the Chapter on real-time dynamics4 and quantum optimization.

As per our definition in Chapter 1, a quantum annealer falls between an analog simulator and a NISQ computer. Although it isn't based on the gate model yet, it aims to perform computations beyond what could be considered a quantum many-body experiment(1).

Quantum annealing is a method for **solving combinatorial optimization problems**. These problems can be transformed into minimizing the energy of classical Ising-type Hamiltonians. By adding quantum mechanics, it has been suggested that the ground state of these frustrated Ising systems can be found faster than with any classical technique.(2)

The adiabatic principle is used, whereby a ground state of a quantum Hamiltonian is prepared and slowly changed. The system evolves following the instantaneous ground state of the perturbed Hamiltonian: if a suitable time-dependent quantum Hamiltonian is defined, connecting an initial Hamiltonian to the final classical Ising Hamiltonian, a quantum system undergoing adiabatic relaxation can reach its ground state and solve the optimization problem, at low temperatures.

The main experimental challenge of quantum annealing is the long runtime needed to adiabatically change the driving hamiltonian, that is currently much longer than coherence time. If thought as a coherent machine, the total run-time of the algorithm is well beyond the coherence limit imposed by hardware noise. However, one could also think about a scenario where incoherent tunneling events may provide a computational advantage.

Early numerical studies predicted quantum annealing would be a competitive computational resource for solving spin glass problems (3). Simulated annealing, a classical counterpart, is the most powerful heuristic solver for generic combinatorial problems. The slowly varying parameter in this case is the effective temperature of a Markov-chain simulation aimed to sample the Boltzmann distribution generated by the classical Ising model. However, experiments have not yet observed quantum speedup. The difference between the two methods lies in the type of fluctuations that drive the system away from multiple local min-

ima occurring in rugged energy landscapes. Quantum fluctuations are expected to give an advantage to quantum annealing, particularly when the free energy landscape displays tall but narrow barriers, which are easier to tunnel through quantum-mechanically. After years of research, it has been shown that such tall but thin barriers occur only in carefully crafted toy models, not in realistic problem instances such as Ising glasses in two or three dimensions. Tough this remains an open challenge.

Challenging optimization problems include (i) determining the optimal (ground-state) energy arrangement of a group of L classical Ising spins with frustrated interactions[1]: the **spin glass**, (ii) determining the shortest possible route for a travelling salesman visiting L cities (known as the travelling salesman problem, or TSP), or (iii) identifying a bit assignment that satisfies an L-bit Boolean formula with numerous logical clauses, each containing k bits (known as k-SAT), known as satisfiability problem.

Many other types of optimization problems exist, however, the common theme is that the configuration space of the L input variables increases exponentially with L, reaching 2^L in the case of Ising and k-SAT, and $L!$ in TSP. The total computational space is too vast for a brute force approach beyond a few tens of sites.

3.2 A bit of complexity theory

In this subsection we provide a simple overview of complexity classes that may be useful also for the rest of the notes. The exposition here is colloquial, as more rigorous definitions exists. The runtime (the worst-case scenario) determine the complexity class of a problem. If we consider classical computation, very common classes are P and NP:

- a problem belongs to the P class if a polynomial (in L) algorithm can solve the worst-case instances. These problems are considered *easy* from the complexity perspective, although the order of the polynomial function can make a great difference in practice.
- The NP class include computational **decision** problems for which any given "yes"-solution can be verified in polynomial time by a deterministic machine. Notice that optimization problems are not stricly speaking decision problems, as their output is a function value. They can be recasted as decision problems if we include also a threeshold value, i.e. E_c. The corresponding verifiable statement, in poly time, is wether the found solution E_{found} is lower than E_c. In this sense, also optimization problem can be included as member of complexity classes.
- NP-hard problems include classes of problems which are at least as hard as the hardest problems in NP. It may sound strange but the NP-hard class is not fully included in NP. NP-hard problems which are in NP, are called NP-complete. All NP-complete problems are also NP-hard, but the opposite is not true. The examples above, in their most general formulation, belong to the category of NP-complete problems, which include the most difficult classes of all NP problems)[2]

[1] i.e. both ferromagnetic and antiferromagnetic with no regular structure

[2] exceptions are the Ising model on certain two-dimensional lattices or the 2-SAT problem

Notice again that this labeling is valid only if we consider the worst-case scenario. Think about the classical ferromagnetic model: here it is easy to guess the ground state, yet it is a special instance of an Ising spin-glass Hamiltonian.

There are complexity classes appropriate also for quantum computation:

- BQP, bounded-error quantum polynomial time, is the class of decision problems solvable by a quantum computer in polynomial time, with an error probability of at most 1/3 for all instances. Roughly speaking is the quantum generalization of P.[3].

  However, the BQP class contains P. We have at least one example of problems, the factorization of large integers which is *not* in P but it belongs to BQP thanks to Shor's algorithm.

  Unfortunately, it is believed that BQP does *not* contains NP. This means that not even with a quantum computer we can exactly solve -with exponential speed-up- optimization problems in this class.

- QMA, quantum Merlin-Arthur, class of problems is the generalization of NP. It includes class of problems which "yes"-solution can be verified in polynomial time by a quantum computer. In physics, the most famous example of such a problems is deciding whether the ground state energy of a given k-local Hamiltonian is smaller than a given value E_c.[4] It has been proven that $k = 2$ is already enough to obtain a QMA-complete problem(4).

The Venn diagram illustrating the mentioned complexity classes (many others exist!) is in Fig. 3.1.

3.2.1 Approximate solutions

From what has been discussed above, the prospects for a quantum advance in optimization problems seem limited, at least in terms of scaling. An argument (not rigorous) that could negate a potential exponential advantage is the fact that search algorithms (see Chapter 7), such as Grover's, offer at most a quadratic speedup over brute force search. Brute force search appears to be the only method capable of guaranteeing the exact solution's discovery.

However, it should be noted that for problems with a certain structure, there may exist better methods than brute force search and correspondingly better quantum methods. It is important to remember that everything mentioned above applies when seeking an exact solution. In practice, though, sometimes one can settle for a good solution, even if it's not the true global minimum. Something good is still better than nothing.

In such cases, one can turn to approximation algorithms, which aim to find these near-optimal solutions. These solutions must provide provable guarantees regarding their closeness to the optimal solution. But how can we quantitatively define if a solution is near-optimal?

In this case, the approximation ratio can be used, which is the ratio between the returned solution and the optimal one. An approximation algorithm can thus provide the following

[3] or, better, its probabilistic version BPP, bounded-error probabilistic polynomial time, which is the class of decision problems solvable by a probabilistic machine in polynomial time with an error probability bounded by 1/3 for all instances. However, this makes a little difference as it is widely believed that BPP=P.

[4] the actual decision problem is slighly more complicated.

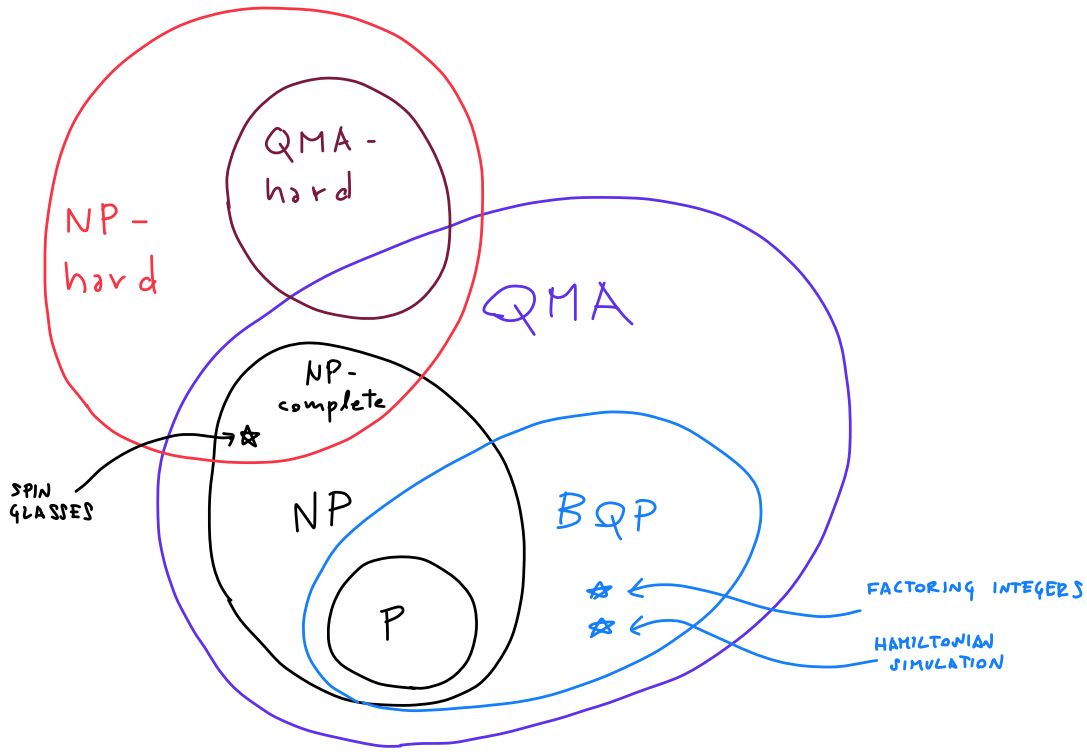

Figure 3.1: Conjectured relationships between the classical and quantum computational complexity classes.

guarantee: it provides a solution that cannot be worse than a given approximation ratio. This defines the APX class: the set of NP optimization problems that allow polynomial-time approximation algorithms with an approximation ratio bounded by a constant.

As you can see, the world of optimization is much more nuanced than one might expect, particularly when delving into the realm of approximate algorithms. It is possible that an exponential quantum advantage could reemerge in this case.

3.3 Spin glasses

Ising spin glasses on general graphs (5) are NP-hard optimization problems, where no efficient (i.e. polynomial time) algorithm exist. Therefore the resources needed to exactly solve spin glasses must scale exponentially with problem size as $\sim 2^{kL}$. Many optimization problems can be cast into a Ising-like form, using the Quadratic unconstrained binary optimization (QUBO) formalism.

Since random ensembles of hard problems are closely connected to spin glass models, we can choose the problem Hamiltonian we want to solve to be an Ising spin glass

$$H_P = \sum_{i,j} J_{ij} \sigma_i^z \sigma_j^z \ , \tag{3.1}$$

where σ_i^z are Pauli matrices, acting on spins i, and J_{ij} is the coupling between spins i and j, which value is set by the specific instance. For instance, a well definite airline routing problem or traveling salesman instance will realize a given instance of this spin-glass hamiltonian, with a well defined connectivity and coupling values. Notice that, in principle, higher-order operators like $\sigma_i\sigma_j\sigma_k$ could be allowed, but in practice only two-spin interaction can be implemented in real hardwares, such as *D-WAVE* machine. For this reason, the QUBO formalism is in general the first step needed to map a user-defined problem into a spin-hamiltonian that can be realized in hardware.

Quantum advantage. The adiabatic annealing method presented below is an exact algorithm for solving sping glasses[5] Despite early speculative claim of possible exponential advantage, quantum algorithms are not expected to turn the exponential scaling into a polynomial one, the exponent k might be smaller, thus potentially realizing a substantial polynomial speed-up over classical algorithms (see above). All in all, the *holy-grail* of quantum annealing is discovering **scaling advantage** for classes of optimization problems which have real applications, i.e. beyond carefully crafted artificial models(6). Morevover, it is entirely possible that the average spin glass problem can be solved in polynomial time, even though the worst case may be exponential.

3.4 The adiabatic principle perspective

As mentioned the initial theoretical bases behind quantum annealing is the adiabatic theorem: if a quantum system undergoing evolution by a slowly time-dependent Hamiltonian $H(t)$ closely follows the instantaneous eigenstate in its time evolution, then by starting the dynamics in one of the ground state of the initial Hamiltonian, we will reach the ground state of the final one.[6]

In a QA machine $H(t=0)$ is dominated by a pure quantum fluctuation part H_Q whereas the final Hamiltonian $H(t_{\text{final}})$ encodes only the cost function H_P of the combinatorial optimization problem. The Hamiltonian as a function of the time t may read, in the case of simple linear annealing schedules (see Fig. 3.2)

$$H(t) = sH_P + (1-s)\ H_Q, \tag{3.2}$$

where $s = t/\tau$, and τ is the total runtime of the process. The driver H_Q operator is a transverse-field (TF) Hamiltonian

$$H_Q = -\Gamma \sum_i \sigma_i^x\ , \tag{3.3}$$

where the σ_i^x operator acts locally on the spin index i inducing quantum fluctuations.

In a close-system quantum dynamics picture, the quantum state obeys a time-dependent Schoedinger equation

$$i\frac{d}{dt}\left|\psi(t)\right\rangle = H(t)\left|\psi(t)\right\rangle, \tag{3.4}$$

[5]being exact does not implies that is going also to be efficient.

[6]Readers familiar with condensed matter may recall the use of the adiabatic theorem to explain the similarity between non-interacting and interacting Fermi liquids. In that case, the adiabatic theorem is only used to derive the theory. In this case, there is a real harwdare, implementing physical couplings J_{ij} and a real trandverse field Γ which vary with time.

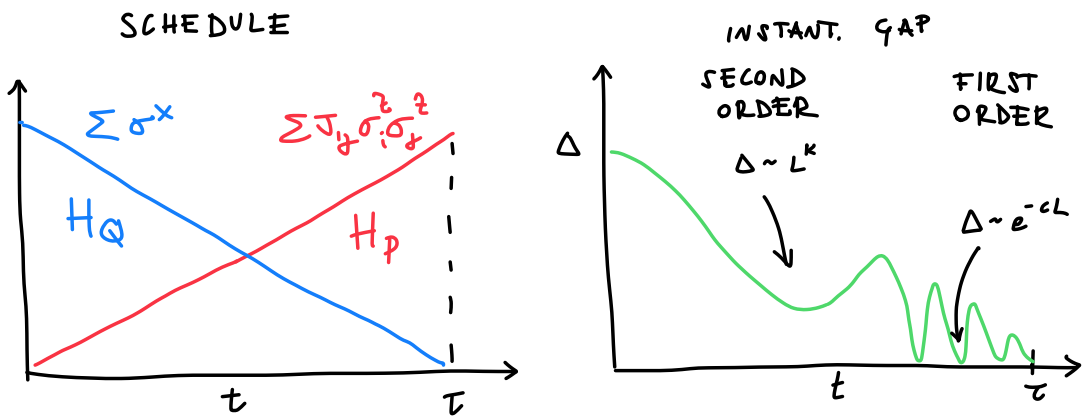

Figure 3.2: Left: Annealing schedule. The quantum fluctuation term is lowered with time while the problem Hamiltonian is increased linearly, as in Eq. (3.2). Right: a typical evolution of the minimum gap (between the ground state and the first excited state of $H(t/\tau)$) during the annealing. In spin glasses, we first encounter a second order quantum phase transition, where the gap closes polynomially with L, followed by the glassy region, where the gap closes exponentially. These are the bottleneck of QA, as here the annealing must proceed very slowly. Obviously, we don't know at which parameter s the hamiltonian will have the minimum gap, so we cannot adjust beforehand the schedule accordingly.

.

where $t \in (0, \tau)$. The total time of annealing is a free parameter of the simulation, though the adiabatic principle suggests to set a large τ. The adiabatic theorem is a fundamental principle that provides a powerful foundation for various applications. However, it also imposes restrictions on the speed of the process. Specifically, the duration of the process must be proportional to the inverse of the minimum energy gap squared, namely by the smallest energy gap Δ encountered during annealing and is solely dependent on the instantaneous Hamiltonian, $H(s)$.

$$\tau \sim 1/\Delta^2, \quad \text{with } \Delta = \Delta(L) \tag{3.5}$$

This is where QA approaches the realm of quantum statistical mechanics: the evolution must traverse a quantum phase transition, because the final (eigenstate of H_P) and initial state (eigenstate of H_Q) are qualitatively different. Therefore the gap closes with the system's size L (in the thermodynamic limit).

Effective QA can be achieved by utilizing problem Hamiltonians that possess a gap in their energy spectrum which does not close exponentially fast with L, i.e $\Delta \sim e^{-L}$ (like in first-order transitions), because in this case the total runtime must increase exponentially with L. If instead the gap closes polynomially (like in continuos phase transtitions), the total runtime is also polynomial with L. Therefore the size dependence of the gap and the type of transition directly determines the computational complexity of QA.

While it is not possible to determine a priori the minimum gap, or the type of transition for every $H(s)$, theory and numerical simulations indicates that it closes exponentially with L in quantum spin glasses at low Γ,(7) as well as for the ferromagnetic Ising model ((see

Fig. 3.2)).

Given that QUBO Hamiltonians do not match exactly the connectivity of the hardware[7], **embedding** is often needed. For instance, real problem Hamiltonians may require *all-to-all* connectivity while the hardware only feature sparse connectivity. Embedding results in the usage of extra qubits, which interact with each others ferromagnetically(8). The resulting embedded, QUBO hamiltonian therefore may feature additional strings of ferromagnetically coupled qubits.

3.4.1 Practical metrics for measuring QA success

The adiabatic annealing method is exact in principle, but it require exponentially long runtimes τ. Practical implementations can only allow for a finite τ, so QA becomes an heuristic method. After some years of usage, it is becoming clear that it is better to allocate the available QPU using multiple runs, instead of performing one single run, but with the longest possible τ (this is due to the limited coherence time of the available hardware, see below).

There are two key metrics, which are generally related, to assess the performance of QA. The first is the residual energy $E_{\text{res}}(\tau) = E(\tau) - E_0$, which decreases for increasing annealing time τ , and where E_0 is the exact minimum of H_P, and $E(\tau)$ is the average energy produced by quantum system after the evolution, $\langle\psi(\tau)| H_P |\psi(\tau)\rangle$.

In a practical setting, the average value can be taken by considering R repetitions of the QA run. Additionally, if one wants to benchmark QA as a solver for a class of problems, i.e. the 2D disordered Ising model, one could perform an overall average over several representative instances.

The residual energy may decrease polynomially with τ, i.e $E_{\text{res}}(\tau) \sim \tau^{-c}$ or logaritmically, i.e. $E_{\text{res}}(\tau) \sim (\log \tau)^{-c}$. In the second case, which is typical of spin-glasses, the problem class is *hard*.

Another commonly used benchmark is to calculate the *success probability*. In this case, we don't aim for the energy but for the configuration, a more stringent requirement. The empirical success probability p can be defined as the number of runs, at fixed τ, that achieve the global minima over R repetitions , $p = \text{success count}/R$. From this, one could measure the number of repetitions[8] to observe at least once the solution with a desired probability p_{target}, for instance 0.99 as

$$R_{\text{target}} = R_{\text{target}}(\tau) = \frac{\log(1 - p_{\text{target}})}{\log(1 - p(\tau))}. \tag{3.6}$$

Therefore the time-to-solution (TTS) of QA, assuming a desired p_{target} is simply

$$TTS(\tau) = \tau \; R_{\text{target}}(\tau), \tag{3.7}$$

since each repetition lasts τ. Empirically we see that there exists a trade-off between running a single, long run, relying fully on the adiabatic theorem and performing several R_{target} trials with a shorter τ. There exist an optimal combination that make uses of the quantum

[7] for instance D-Wave machine implement a chimera graph connectivity

[8] The formula can be obtained as follows. Given $p(\tau)$ the empirical probability of finding the solution during a run of lenght τ, the probability of still *not* observing the solution after R repetitions is $1-p_{\text{target}} = (1-p(\tau))^R$

processing time (QPU) of the machine in the best way. Performing several set-up with different τ, allows one to identify the optimal TTS for a given problem size.

This optimal TTS should then be plotted against L to rigorously find the runtime scaling. At a first glance, this could seem a quite a pedantic post-processing step, however, if done incorrectly, it may lead to qualitatively wrong claim of quantum speedup (see e.g. the discussions in Refs. (9; 10)) For this reason, we explicitely lay down these formula in this Section.

3.5 The incoherent tunneling perspective

Most recent results (2022) indicate that new generation of quantum annealers have coherence time of order of 100 ns. However, the tipical runtime ar of order of tens of microsecond(11).

It is clear therefore that the system interacts with the enviroment, and the ideal assumption of a close-system dynamics obeying the adiabatic principle is not a faithful representation of the process.

Quantum annealing goes beyond the adiabatic computation framework. Indeed, an alternative perspective can be taken where the machine is understood as to be in instantaneous equilibrium at the Hamiltonian $H(s)$ and with the environment at any given time s. The coherence of the system can easily be disrupted by external noise, resulting in incoherent quantum tunnelling becoming the primary computational resource.

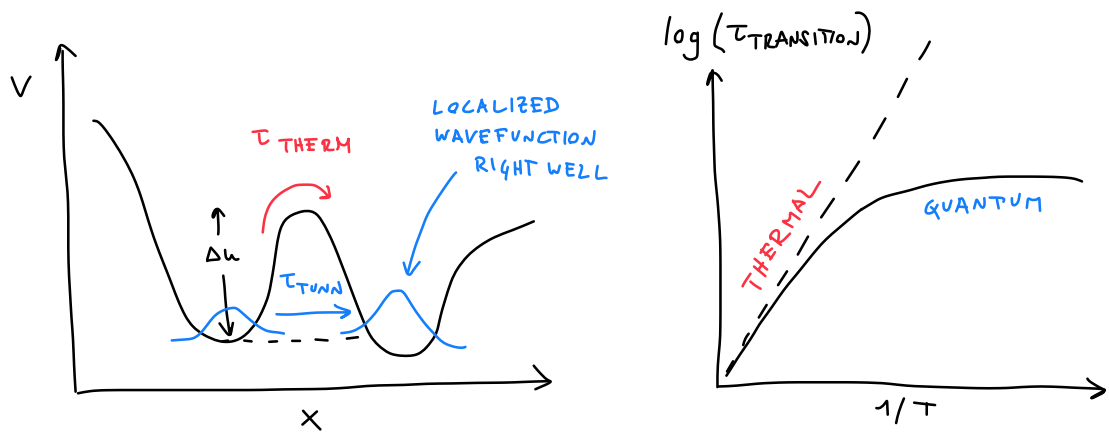

Figure 3.3: Left: Energy barrier with height ΔU. In the quantum tunneling picture, a localized quantum state undergoes quantum tunneling into a new localized state. Right: Transition time (logscale) as a function of the inverse temperature. At high temperature, classical regime, the transition time follows the inverse Kramers rate featuring an explicitic temperature dependence. At low temperature, transition are driven by quantum fluctuations and are independent of T. In this regime, quantum tunneling is more effective in overcoming energy barriers than thermal excitations.

.

When considering a double-well model, the thermal transition rate scales exponentially with the barrier height $k_{\text{thermal}} \sim e^{\Delta U/T}$, whereas the tunnelling rate, $1/\tau_{\text{tunn}}$, scales expo-

nentially with the area beneath the barrier, and is independent from the temperature T. This leads to the popular notion that quantum annealing is advantageous for energy landscapes with tall yet narrow barriers (cfn. Fig. 3.3).

Interestingly, it is possible to derive a theory for the incoherent tunneling rate in double-wells models, showing that

$$\tau_{\text{tunn}} \sim 1/\Delta^2, \tag{3.8}$$

where, again, Δ is the energy gap of the quantum hamiltonian of the double-well model(12). Strikingly, if we assume that the the annealing process occurs as a sequence of uncorrelated, incoherent tunneling events, the runtime of the annealing is dominanted by the longest tunneling timescale, i.e. the one which smallest gap Δ. This runtime scaling is therefore consistent with Eq. 3.5.

3.5.1 Quantum inspired classical algorithms

In general, simulating real-time quantum dynamics requires the direct integration of the time dependent Schr´odinger equation. This is a formidable task as the Hilbert space of the systems grows exponentially with the number of constituents, and is the one of the reason why quantum computers are built in first place. Simulating the microscopic non-equilibrium dynamics inside a quantum annealer, or any other noisy quantum device, is even mode difficult as we don't know exacly how to model the hardware noise.

However, the characterization of quantum dynamics simplifies when it is dominated by tunneling events. While, quantum dynamics can not be accessed efficiently by classical algorithms, equilibrium properties of certain quantum hamiltonian can be simulated efficiently.

Quantum Monte Carlo (QMC) techniques are based on the Feynman path integral formulation of quantum mechanics and are used to simulate the thermodynamic equilibrium of Hamiltonians that do not have the sign problem.[9] An example of such Hamiltonians is the transverse field Ising Hamiltonian.

Practically speaking, QMC is a class of classical Monte Carlo algorithms that uses Metropolis sampling on a $(d+1)$-dimensional lattice model, where the additional dimension is known as the imaginary time axis. Although QMC and quantum tunneling events are fundamentally different, it has been shown that algorithmic tunneling-like Metropolis updates are needed to overcome energy barriers, just like in real incoherent tunneling events. Moreover, the time required by QMC to simulate quantum mechanical tunneling scales identically, in leading exponential order, with the problem size to the tunneling rate of a physical system ($\sim 1/\Delta^2$)(13).

From an algorithmic standpoint, QMC tunneling events are needed to sample the configuration space, so the probability of finding the local minima is proportional to the QMC tunneling rate, which is related to the exploration of the computational space. In this sense, if QMC is considered as a solver, the classical QMC runtime should theoretically scale as Δ^2 when performing a sequence of equilibrium simulations of Hamiltonians at decreasing Gamma values. This context is often referred to as Simulate Quantum Annealing (SQA).(3)

The existence of competing QMC simulations, which show the same scaling as QA, has raised the bar for quantum advantage. Quantum Annealing not only needs to outperform

[9] The sign problem-free Hamiltonians are those for which efficient QMC simulations are possible.

Simulate Annealing but also QMC, a quantum-inspired but still very classical solver. Experimental results have confirmed this scenario. Although it has been possible to devise toy models in which QA outperforms SA, it has not been possible to outperform SQA in terms of scaling.

Furthermore, classical simulations of SQA can be performed with arbitrary setups. It has also been demonstrated that running SQA with an unconverged setup, i.e., using a small number of imaginary-time Trotter steps or adopting unphysical open-boundary conditions in imaginary time, further improves the scaling.

The positive side of this comparison is that it is possible to see that, despite the noise, quantum annealers are not thermal machines. The instances for which QA is successful correlate better with the ones where also SQA is, rather than SA, see e.g. Ref. (14).

In conclusion, QMC is part of a family of classical algorithms that **mimic quantum mechanics but run on conventional hardware**. This family is today referred to as quantum-inspired algorithms.

Bibliography

[1] M. W. Johnson, M. H. Amin, S. Gildert, T. Lanting, F. Hamze, N. Dickson, R. Harris, A. J. Berkley, J. Johansson, P. Bunyk, *et al.*, "Quantum annealing with manufactured spins," *Nature*, vol. 473, no. 7346, pp. 194–198, 2011.

[2] T. Albash and D. A. Lidar, "Adiabatic quantum computation," *Reviews of Modern Physics*, vol. 90, no. 1, p. 015002, 2018.

[3] G. E. Santoro, R. Martoňák, E. Tosatti, and R. Car, "Theory of quantum annealing of an ising spin glass," *Science*, vol. 295, no. 5564, pp. 2427–2430, 2002.

[4] J. Kempe, A. Kitaev, and O. Regev, "The complexity of the local hamiltonian problem," *Siam journal on computing*, vol. 35, no. 5, pp. 1070–1097, 2006.

[5] F. Barahona, "On the computational complexity of Ising spin glass models," vol. 15, no. 10, p. 3241, 1982.

[6] V. S. Denchev, S. Boixo, S. V. Isakov, N. Ding, R. Babbush, V. Smelyanskiy, J. Martinis, and H. Neven, "What is the computational value of finite-range tunneling?," *Physical Review X*, vol. 6, no. 3, p. 031015, 2016.

[7] S. Knysh, "Zero-temperature quantum annealing bottlenecks in the spin-glass phase," *Nature communications*, vol. 7, no. 1, p. 12370, 2016.

[8] M. S. Könz, W. Lechner, H. G. Katzgraber, and M. Troyer, "Embedding overhead scaling of optimization problems in quantum annealing," *PRX Quantum*, vol. 2, p. 040322, Nov 2021.

[9] T. F. Rønnow, Z. Wang, J. Job, S. Boixo, S. V. Isakov, D. Wecker, J. M. Martinis, D. A. Lidar, and M. Troyer, "Defining and detecting quantum speedup," *science*, vol. 345, no. 6195, pp. 420–424, 2014.

[10] T. Albash and D. A. Lidar, "Demonstration of a scaling advantage for a quantum annealer over simulated annealing," *Phys. Rev. X*, vol. 8, p. 031016, Jul 2018.

[11] A. D. King, S. Suzuki, J. Raymond, A. Zucca, T. Lanting, F. Altomare, A. J. Berkley, S. Ejtemaee, E. Hoskinson, S. Huang, *et al.*, "Coherent quantum annealing in a programmable 2000-qubit ising chain," *arXiv preprint arXiv:2202.05847*, 2022.

[12] U. Weiss, H. Grabert, P. Hänggi, and P. Riseborough, "Incoherent tunneling in a double well," *Physical Review B*, vol. 35, no. 18, p. 9535, 1987.

[13] S. V. Isakov, G. Mazzola, V. N. Smelyanskiy, Z. Jiang, S. Boixo, H. Neven, and M. Troyer, "Understanding quantum tunneling through quantum monte carlo simulations," *Physical Review Letters*, vol. 117, no. 18, p. 180402, 2016.

[14] S. Boixo, T. F. Rønnow, S. V. Isakov, Z. Wang, D. Wecker, D. A. Lidar, J. M. Martinis, and M. Troyer, "Evidence for quantum annealing with more than one hundred qubits," *Nature physics*, vol. 10, no. 3, pp. 218–224, 2014.

Chapter 4

Hamiltonian simulation

We define the problem of Hamiltonian simulation and we start with the simplest algorithm based on product formulas, which is the only one feasible for today noisy hardware. At the end we will discuss the traditional way to use Hamiltonian simulation as a way to calculate the eigenvalues of the Hamiltonian. We also include two useful digression on Quantum Phase Estimation and Linear Combination of Unitaries. The latter will be properly expanded in Chapter 9. In Chapter 10 we will finally introduce the modern approach to simulation, namely algorithms with a optimal runtime scaling. However, for historical reason it makes sense to begin with the Trotterized approach and re-visit the problem at a later stage, where the reader will be more familiar with quantum algorithms.

4.1 Motivation and quantum advantage

Hamiltonian simulation, also known as quantum dynamics, is a fundamental application of digital quantum computers. Formally, the task is to solve the Schroedinger equation

$$i\frac{d}{dt}\left|\psi(t)\right\rangle = H(t)\left|\psi(t)\right\rangle, \tag{4.1}$$

starting from a given initial state $|\psi(t=0)\rangle$, and where the Hamiltonian may be or not be explicitely time-dependent, $H(t)$. Clearly even if the Hamiltonian is time-independent, we will observe a non-trivial evolution if the starting state $|\psi(t=0)\rangle$ is not an eigenstate of H. In "real life" this is typically the case. Experiments may probe a quantum system by perturbing it, so even if the system was originally in a ground-state of some H_{init}, it is not anymore. If the perturbation is fast-enough, i.e. the opposite case of an adiabatic evolution presented before, then the system develops a non-trivial evolution. This case if often called, a quantum quench(1). The study of non-equilibrium dynamics is a the center of many important disciplines, such as nano electronics, because of the possibility of photo-induced metal-to-insulator and magnetic transitions, but also to understand "pump-probe" experiments and the rich physics of non-equilibrium strongly correlated systems. On a more theoretical side, such algorithms are essential to address closed-system thermalization, i.e. how and when thermalization occurs as a result of the unitary time evolution of a *closed* quantum system. Going beyond condensed matter, the unitary dynamics of quantum systems made of electrons and nuclear wavepackets is needed to model certain types of chemical reactions, such

as photochemistry. In this case, the Born-Oppenheimer approximation breaks down, and one needs to consider the dynamical interplay between electrons moving on (superpositions of) several potential energy surfaces. Finally, there is a large demand for efficient solvers in high-energy physics, to simulate the evolution of lattice gauge theory models.

Coming back to quantum computers, here the goal is to perform unitary operations on a quantum computer that match the evolution of a quantum system. The reason why hamiltonian dynamics is computationally challenging is also what makes quantum computers so powerful. While Feynman (1982) initially proposed using a quantum computer as the natural way to simulate quantum mechanics(2), it wasn't until more than a decade later that Lloyd (1996) introduced the idea of a universal quantum simulator, which could practically perform Hamiltonian simulation(3)

The good news is that the simulation of physical Hamiltonians, which have k-local interactions, can be achieved with polynomial complexity in both space (number of qubits) and time. This kind of problems is in the BPQ complexity class, as defined in the previous Chapter. These Hamiltonians include electronic structure and condensed matter problems that involve pairwise electron-electron interactions, which, for instance in a second-quantized formalism, only require four-index operators. In contrast, all known classical methods[1] for these problems have exponential time costs that grow with system size. During the dynamics, even if we start with a localized quantum state, we will visit an exponential number of states due to the spreading of correlations out of equilibrium, such as the *light-cone* effect after quantum quenches.

The scope of hamiltionian simulations goes beyond the realm of direct quantum dynamics of physical systems. *(*i) Performing blocks of e^{iHt} evolutions will prove also useful to get *ground state* properties of H. *(ii)* Going beyond quantum-many body physics, hamiltonian simulation is a building block of other algorithms, i.e. for optimization (i.e. QAOA) and sampling of classical cost functions, up to solving linear systems.

4.1.1 Classical competitors for physics applications

Classical simulation of quantum dynamics is primarily limited by memory. As soon as we reach a number of quantum constituents larger than what can be simulated classically (around 50 qubits), we achieve the quantum advantage regime. Storing a quantum state of 50 qubits with double-precision coefficients for each of the 2^{50} possible components requires 16 PB of memory. To perform arbitrary discrete-time evolution, we would need to manipulate such an array thousands of times. For instance, direct matrix exponentiation e^{iHt} for a many-body quantum Hamiltonian for 50 spin-1/2 particles would require, an array made of 10^{15} entries undegoing a matrix-vector multiplication of size $2^{50} \times 2^{50} = 10^{30}$.

Approximate classical methods rely on compressing information into polynomially scaling control variables, which are efficient for ground state properties but less so for dynamics. These methods are difficult to benchmark because of the absence of a variational energy principle.

[1] methods with controlled approximations.

Several methods have been proposed to extend the power of approximate ground state approaches, with one of the most notable being tensor-networks. These methods are particularly effective for dynamics that occur near the ground state. In its simplest form, tensor-networks begin with a quantum state in a matrix product state (MPS) format, where the evolution operator can be expressed as a matrix product operator. To compute the action of one step of evolution on the MPS, a sequence of operators is applied to produce an MPS with a larger bond dimension, which is then truncated to maintain a fixed dimension. This process is repeated for the required number of steps to calculate expectation values over the evolved state.

Real-time variational Monte Carlo and real-time neural-network state methods function similarly, updating a number of variational parameters θ specifying the ansatz $|\psi(\theta(t))\rangle$ during discrete-time iteration to satisfy the Dirac-Frenkel or McLachlan variational principle. These methods ensure that the complexity of the calculations remains unchanged over time, by maintaining the flexibility of the variational form constant. However, accuracy inevitably degrades as time increases. Notable examples of these methods include simulations of an 8x8 transverse field Ising model plaquette for thousands of time slices using neural-networks(4), and a 4x4x4 lattice quantum electrodynamics simulation with tensor-networks(5). Other statistical methods include diagrammatic real-time quantum Monte Carlo, where one samples, at each time step, configurations to be evolved.

For condensed matter, strongly-correlated systems, another well-established classical method is represented by the nonequilibrium extension of the dynamical mean field theory (DMFT), which treats quantum fluctuations in the time domain and works directly in the thermodynamic limit(6). Going back to chemistry, the multi-configuration time-dependent Hartree (MCTDH) algorithm is a versatile method for solving the time-dependent Schrödinger equation in multidimensional dynamical systems that involve distinguishable particles. In this case it is possible to calculate the quantum motion of a molecular system's nuclei as it evolves on one or more interconnected electronic potential energy surfaces. However, it becomes computational demanding with increased dimensionality, such that state-of-the art simulations consider up to tens of (internal) coordinates.

Currently (2026) we are in an era where it is still not easy to claim quantum supremacy for hamiltonian simulations but we are definitely close to the boundary of what is classically simulatable. Both approaches are in a tight arm race. For instance, in 2023, IBM showcased a record-sized real-time dynamics of a 2D heavy-hexagon lattice Ising model using Trotterization, 127 qubits, and error mitigation techniques(7) (see later for definition of these words) Just ten days later, classical tensor network simulations achieved the same result(8; 9), raising the bar once again to declare a quantum advantage.

4.2 Product formulas

Quantum algorithms for real-time dynamics have the benefit of unifying all various application oriented methods. Currently, different communities use distinct classical algorithms that are best suited for specific applications. Quantum computing can afford to employ the brute-force approach, which is exponentially scaling in conventional hardware but not in quantum computing. The different applications will then reveal themselves in the particle-to-qubit mapping which is problem-specific and produces different qubit hamiltonians.

This note is specific to digital devices, which can run "algorithms" in a familiar sense compared to quantum simulators, where the Hamiltonian must be realized at the hardware level and the time-evolution is obtained "for free", like in an experiment. However, controlling all degrees of freedom of the system is typically not possible, resulting in hardware calibration errors[2] and decoherence that can compromise the accuracy of the evolution. These errors are difficult to detect, and therefore validating the results is essential. This difference mirrors the discussion in the Chapter1 about error-correcting and analog machines. An informative, short review about analog and digital quantum simulators and threshold for quantum advantage is Ref (10).

After all this introduction and preambles, we can finally outline the quantum algorithm.

The first thing to consider, which is almost never explicitly stated in textbooks, is that, despite the fact e^{iHt} is a unitary operator, this does not mean that there exists an exact way to implement it on a quantum computer. For this reason, we need to resort to approximation that allows us to *compile* the problem using an efficient number of gates. Not surprisingly the most used algorithm for that is based on product formulas (or Trotter decomposition), where the exponent of a sum of operators is approximated by a product, introducing a discretisation error.

Let us start by assuming the existence of a qubit hamiltonian, acting on L qubits i.e

$$H = \sum_p P_p, \tag{4.2}$$

where P_p are Pauli strings, i.e. tensor products of L Pauli matrices, such as $ZZZ..$ or $XYIZ$. We will see later how to match a specific use-case with a qubit hamiltonian. Here let us be a bit flexible with the notation and wording, as sometimes we can identify the spin $1/2$ operators with the X, Y, Z operators. A typical example of such hamiltonian is the Transverse field one,

$$H = \sum_i^L Z_i Z_{i+1} + \sum_i^L X_i. \tag{4.3}$$

This form coincides with the former one if we consider e.g. the term $Z_i Z_{i+1}$ as a Pauli string made of two consecutive Z operators embedded into a string on $L-2$ identities, i.e $II\cdots IZ_iZ_{i+1}I\cdots I$. In general a qubit Hamiltonian can be expressed as a sum of several terms

$$H = \sum_{k=1}^K H_k, \tag{4.4}$$

In the worst case scenario, $H_k = P_k$, i.e. where each Pauli string can be identified with one term, but here we used different indexes because the terms H_k are commuting groups of sets of Pauli strings. For instance, for the Ising model, $K = 2$, and $H_1 = \sum_i^L Z_i Z_{i+1}$, whereas $H_2 = \sum_i^L X_i$.

[2] to give an example, the Hubbard model can be effectively realized with cold atoms in optical lattices. Here fermionic atoms model the electrons and are trapped with laser beams as to model the lattice. The Hubbard U and t interactions are tuned by changing the optical trap parameters, however due to imperfections the effective Hubbard parameters simulated could be a different (U', t') set.

In the simplest algorithm, one just discretizes the total time t, into n timesteps, of length $\delta t = t/n$, and approximates

$$e^{-iH\delta t} \approx e^{-iH_K \delta t} \cdots e^{-iH_1 \delta t}, \tag{4.5}$$

introducing an $O(\delta t^2)$ error per timestep. The total evolution of duration t is implemented by repeating n times this decomposition

$$e^{-iHt} \approx U_{(1\text{st})} = \left(e^{-iH_K t/n} \cdots e^{-iH_1 t/n}\right)^n, \tag{4.6}$$

where we make evident the trick of dividing and multiplying by n. The overall error from repeating this sequence n times accumulates at most linearly with n going as $O(t^2/n)$, which can be made **arbitrarily small with large** n. More precisely, the Trotter error of this first-order decomposition is given by

$$\text{error}_{(1\text{st})} = \frac{t^2}{2n} \sum_{k,\ell}^{K} ||[H_k, H_\ell]|| + \text{higher orders} \tag{4.7}$$

From this equation we see that the error is controlled by the size of the commutators[3]. The first-order formula can be systematically generalized to higher-order formulas. For instance the second-order expansion reads For instance, the second-order PF (PF2) approximates e^{-iHt} by

$$e^{-iH\delta t} \approx U_{(2\text{nd})} = \left[\left(e^{-iH_1 \frac{t}{2n}} \cdots e^{-iH_K \frac{t}{2n}}\right)\left(e^{-iH_K \frac{t}{2n}} \cdots e^{-iH_1 \frac{t}{2n}}\right)\right]^n, \tag{4.8}$$

which introduces an error of order $\mathcal{O}(\delta t^3)$ per cycle and a cumulative error of order $\mathcal{O}(\delta t^3/n^2)$. Interestingly, in the case of $K = 2$, i.e. of the Ising model, the second order formula, per time slice, simplifies to

$$e^{-iH\delta t} \approx e^{-iH_1 \frac{t}{2n}} e^{-iH_2 \frac{t}{n}} e^{-iH_1 \frac{t}{2n}}, \tag{4.9}$$

such that, when joined together it is equal to the first-order one *in the bulk* and differs only at the two extremities, where the operator H_1 needs to be evolved for half time at the beginning and at the end. In this case, we can have the accuracy of the second-order formula at (almost) the cost of a first order one, since it only introduces one additional time slice.[4]

Overall, the product formulas are a powerful method to simulate the dynamics of quantum systems with arbitrary and systematically improvable accuracy, at the cost of increasing the computational cost of the algorithm.

4.2.1 Trotter errors and randomized compilation

The $t^2/2n$ error bound, to leading order, provided by Lloyd has been further refined considering the contribution from higher-order terms. All in all the error scaling has and is

[3] by $||\cdots||$ is implied the spectral norm of an operator, meaning the maximum singular value of the matrix

[4] the cost only depends on the number of layers, not on the size of scalar δt, which will just be absorbed into rotation angles.

still subject of theoretical research, also because theoretical bounds can be several orders of magnitude larger than what is observed, even for quite small systems, see e.g. the fairly recent (2021) Ref. (11)) Sometimes, the observed scaling is also asymptotically better than the deterministically predicted one, just looking at the magnitude of the commutators, and the upper bound spectral norm of the terms, $\max_k ||H_k||$. This means that the errors also depends on other factors, such as the type and the sparsity of the Hamiltonians, and different bounds exists for different problems.

By studying better the error, researchers devised clever implementation of the product formula. For instance, the randomized product methods improve the scaling(12) by sampling order of the H_k terms, rather than performing always the Trotterization sequentially. There are two ways to see why randomization may help, the first is high-level one: random compilation has been shown to reduce errors below what is feasible with a deterministic compiler, and since as we said, producing Hamiltonian simulation circuits is a special case of compilation, one can guess that randomization can also be helpful in this setting.
The second one, can be understood by simply inspecting the origin of the first-order trotter error arises: Let's consider again a simple Hamiltonian made of two operators, $H = H_1 + H_2$. The Taylor expansion of the first-order formula as a function of δt is

$$U_{(1\text{st})}(\delta t) = \exp(\delta t H_1)\exp(\delta t H_2) = I + \delta t(H_1 + H_2) + \frac{\delta t^2}{2}(H_1^2 + 2H_1H_2 + H_2^2) + O(\delta t^3), \quad (4.10)$$

whereas the Taylor series of the ideal evolution is

$$e^{iH\delta t} = \exp((H_1 + H_2)\delta t) = I + \delta t(H_1 + H_2) + \frac{\delta t^2}{2}(H_1^2 + H_1H_2 + H_2H_1 + H_2^2) + O(\delta t^3). \quad (4.11)$$

We can bind the spectral-norm error as

$$\left\| e^{iH\delta t} - U_{(1\text{st})}(\delta t) \right\| \leq \|[H_1, H_2]\| \frac{\delta t^2}{2} + O\big((\max\{\|H_1\|, \|H_2\|\})\delta t)^3\big), \quad (4.12)$$

recovering Llyod result, as expected. However, we can also see the origin of the commutator: it is impossible to approximate the exact operator to second order using a (ordered) product of only two exponentials of H_1 and H_2, as we can have only one of the products H_1H_2 or H_2H_1 in the expansion. If only we could have a symmetric operator of type $1/2[\exp(\delta t H_1)\exp(\delta t H_2) + \exp(\delta t H_2)\exp(\delta t H_1)]$ we could match the expansion up to second-order. This operator may however be not unitary so a clever solution is to reverse sometimes the order of the operators in the time-slices, as to make the H_2H_1 product also appear.

A further extension is the "Qdrift" algorithm, where the terms are sampled with probability proportional to their coefficient in the Hamiltonian expansion[5]

A rather technical paper with improved bounds for product formula errors, which are "problem aware" is Ref. (11).

[5] these are not appearing explicitly in Eq. 4.4, though we can assume that each H_k in there can be written as $c_k H_k$ where c_k is a scalar coefficient and H_k is the operator.

4.3 Gate compilation for Pauli strings

The usage of product formulas makes sense only if, while we don't know an exact compilation of e^{itH}, we know how to write a circuit of each of the K terms e^{itH_k}. We also remind that we consider compilation using standard gate sets introduced in Sect. 2.3.3, namely Clifford and single qubit rotations.

Gladly, evolution of terms like e^{itP_k}, where P_k, as above, is a Pauli string, is simple. They can be easily simulated because they can be diagonalized using Clifford operation, i.e. the same concept outlined in Sect. 2.4.2, when discussing the **change of basis** to measure operators.

Let's start from the simplest Hamiltonian, the one-body operator $H = \alpha Z$, where Z is the Pauli matrix. The corresponding evolution operator

$$e^{-i\alpha Zt} = R_z(2\alpha t) \tag{4.13}$$

is exactly the rotation-z gate we introduced in Eq. 2.2.1, where we take into account that the definition of the gate in its matrix format includes a factor 1/2.

The second easiest case is for instance a non-diagonal Hamiltonian $H = \alpha X$. This case admits two circuits: (i) the evolution operator can be simulated using directly the $R_X(2\alpha t)$ rotation, or we can use the $R_Z(2\alpha t)$ and a change of basis. The reason why this can be done is connected with Sect. 2.4.2 but it is actually less straightforward as it requires the following Theorem[6]: if U is a unitary matrix, then

$$e^{UAU^\dagger} = Ue^A U^\dagger. \tag{4.14}$$

This can be proven using Taylor expansion,[7] and it allows us to "transfer" the unitary U, enabling the change of basis, from the exponent to outside the rotation gate. In this case, we would make use of the known identity $X = HZH$[8] and

$$e^{-i\alpha X} = e^{-i\alpha HZH} = H\ e^{-i\alpha Z}\ H. \tag{4.15}$$

This can be realized using the same rotation R_Z gate, sandwiched between two Hadamard gates.

The next case is a multi-qubit hamiltonian $H = \alpha Z \otimes Z$. The general trick in these cases, where the operator is not directly a defined gate is to diagonalize it and look at the effect of the operator to the eigenstates. For the $Z \otimes Z$ operator the eigenbasis is already the computational basis (by definition). Let's take for instance the first ket $|00\rangle$: then $Z \otimes Z\,|00\rangle = (1 \times 1)\,|00\rangle = +1\,|00\rangle$, while we would have $Z \otimes Z\,|01\rangle = -1\,|01\rangle$. Since

$$e^{-iHt}\,|\psi\rangle = e^{-i\lambda t}\,|\psi\rangle\,, \quad \text{if} H\,|\psi\rangle = \lambda\,|\psi\rangle\,, \tag{4.16}$$

[6] with additional assumptions on A which are satisfied here, i.e A is a matrix of the same size of U.

[7] the key step is realizing that $(UAU^\dagger)^k = UA^kU^\dagger$, and insert this in the Taylor expansion $e^{tUAU^\dagger} = \sum_{k=0}^{\infty} \frac{(tUAU^\dagger)^k}{k!}$

[8] where this H is the hadamard gate, not the hamiltonian.

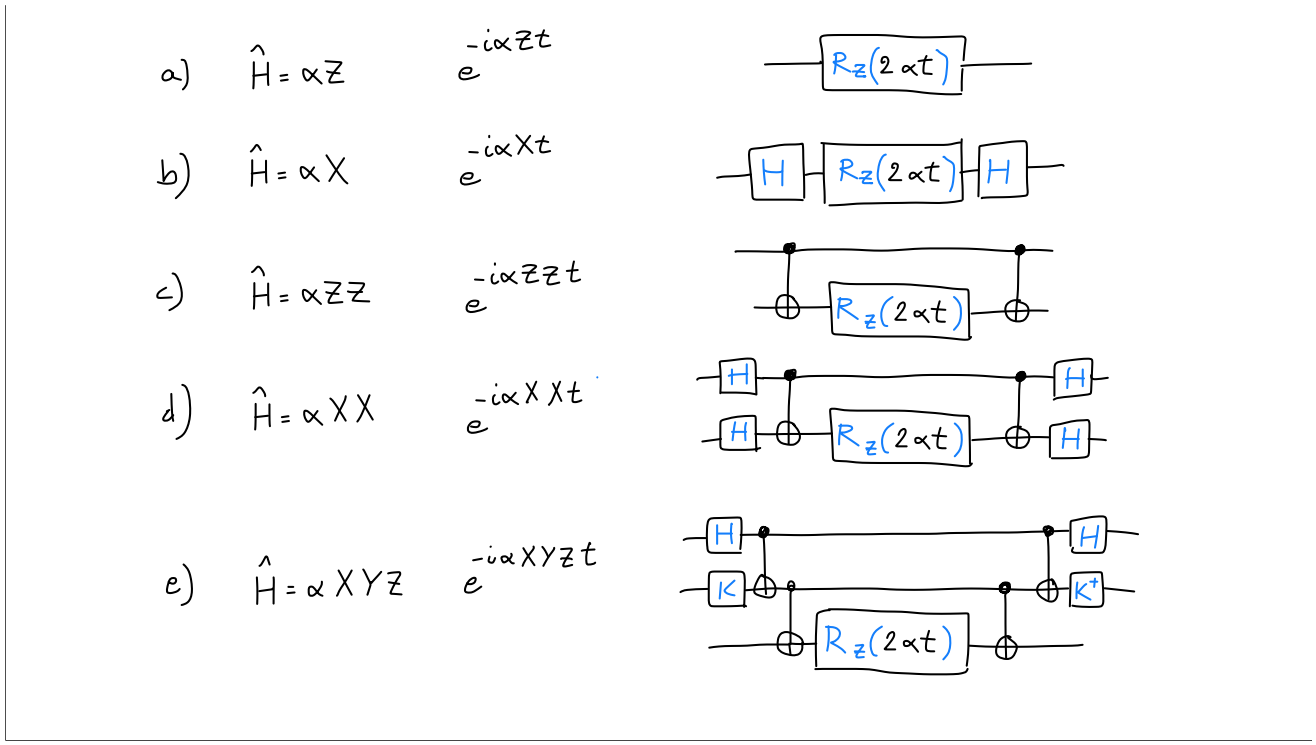

Figure 4.1: Circuits for time-evolving exactly some Pauli strings operators.

.

then $e^{-i\alpha Z\otimes Z}|00\rangle = e^{-i\alpha}|00\rangle$, while $e^{-i\alpha Z\otimes Z}|01\rangle = e^{+i\alpha}|01\rangle$ So the trick is to find a sequence of operations that assigns the correct *phase* to each of the four basis states. The systematic way to determine the correct sign is by performing a so-called *parity-check* of the vector. The circuit in panel (c) of Fig. 4.1 performs exactly this task[9] We remember that, if the circuit works for each basis state, then it will work when a generic quantum state is the input.

The circuit for the non-diagonal two-qubit case, i.e $H = \alpha X \otimes X$ can be produced by combining the last two ideas, the basis rotation and the parity check, yielding the circuit (d) of Fig. 4.1.

Further, we can generalize these prescriptions to a multi-qubit Pauli such as $H = \alpha X \otimes Y \otimes Z$. The basis rotations will transform the original operator into $\alpha Z \otimes Z \otimes Z$, which can be dealt with an extended CNOT parity check. Now, if the support[10] of these Pauli strings is finite, i.e. $\mathcal{O}(1)$, the number of CNOT needed to implement these terms is also finite. While this kind of operators seems exotic, we will see that they naturally arise in fermionic simulations.

Finally, we remind that, in case of sums of terms like $H = \alpha Z \otimes Z + \beta X \otimes I$, one needs

[9]The reader can check the evolution of every computational basis state $|00\rangle, |01\rangle, \cdots$ after each checkpoint, similarly to the calculation featured in Fig. 2.4.

[10]the number of non-identity Pauli matrices

to find the basis that diagonalize H to exploit the trick outline above to time-evolve exactly e^{-iHt}. But in general, this is as hard as to solve the problem beforehand so that's why we use Trotterization. For small systems, one can resort to matrix identities that allow for shortening the circuit. On a different perspective, such optimized (in terms of CNOT counts)[11] circuits could also be found in the *transpilation* phase (cfn. Sect 1.3). In Fig. 4.2 we give an example for a two-qubit anysotropic Heisemberg Hamiltonian(13) The circuit further simplifies in case where two parameters become equal.

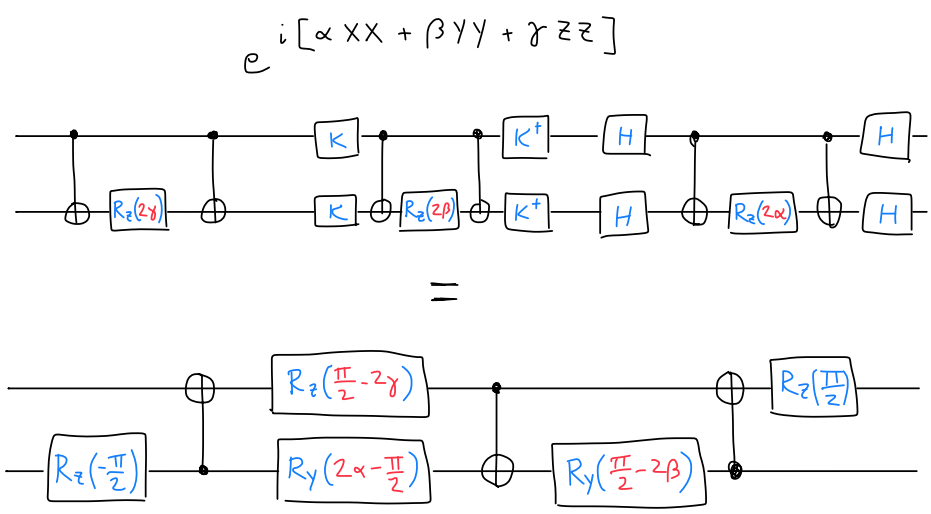

Figure 4.2: Initial version of trotterized circuit and the optimized version which yields the equivalent unitary operations where the three blocks are not visible anymore.

.

4.4 (Quick intro of) Linear Combination of Unitaries

We saw how it is possible to perform a product of unitaries. What about the sum?

First of all, let's notice that the sum of a number of unitaries is not guaranteed to be also an unitary operator. Most likely the opposite occurs[12] In general, summing up unitaries has a lot of applications, but in the context of hamiltonian dynamics it is easy to understand its value: one can directly add up the terms of the Taylor expansion in a very controllable way, without Trotter commutator-related error,

$$e^{-iHt} = 1 - iHt - H^2t^2/2 + \cdots = \sum_{r=0}^{R} \frac{(-itH)^r}{r!}, \tag{4.17}$$

[11] therefore optimized for NISQ applications where the CNOT is the most noisy operation

[12] Simplest counter-example is the operator $I + Z$. For instance $(I + Z)/2 = |0\rangle\langle 0|$ is a projector.

for an expansion up to the R-th order. Notice that, assuming that the Hamiltonian itself is a sum of terms

$$H = \sum_{k=1}^{K} c_k H_k, \tag{4.18}$$

where we explicitely write the coefficients, then the sum of unitaries of the truncated Taylor, at order R, expansion of e^{-iHt}, assume the form

$$\sum_{j=0}^{\kappa} a_j V_j, \tag{4.19}$$

where $\kappa = \sum_{r=0}^{R} K_r$, i.e. the sum of the number of terms constituting each of the possible powers of H, and V_j is in the form of products of $H_1 H_2 \cdots H_k(r)$, and $a_j > 0$.

However, without entering too much into cumbersome details and notations, let's present here the general idea of linear combinations of unitaries. In a more general format, let's assume we have the following sum of L unitaries U_ℓ,

$$W = \sum_{\ell=0}^{L-1} \alpha_\ell U_\ell. \tag{4.20}$$

where $\alpha_\ell \geq 0$.[13] In the general case. W is non unitary, so we need to use a larger system such that the action on a subregister $|\psi\rangle$ is our non-unitary operation $W|\psi\rangle$, but the overall operation is unitary.

$$U = \begin{bmatrix} W & \cdot \\ \cdot & \cdot \end{bmatrix}, \tag{4.21}$$

promoting the state into a larger state

$$|\psi\rangle \to \begin{bmatrix} |\psi\rangle \\ \mathbf{0} \end{bmatrix}, \tag{4.22}$$

where we use the notation $\mathbf{0}$ to remind that the additional register can be made of more than a single ancilla qubit, so this is a multi-qubit zero state. The idea is that, if we apply the unitary U to the total state $|\mathbf{0}\rangle|\psi\rangle$, **when** we measure $\mathbf{0}$, we applied the sum. We stress the word "when", because this is a probabilistic approach, with a failure probability (which can be actually large). This general idea is called **block-encoding**. Notice that, since the operation is non unitary, what we (could) produce (non-deterministically) is actually the *normalized* state

$$|\psi\rangle \to \frac{W|\psi\rangle}{|W|\psi\rangle|}. \tag{4.23}$$

Let us start with a concrete simple case, to show how the corresponding circuit for U can be build. So far we know that we need at least an ancilla qubit. Suppose that we want to realize the sum $W = A + B$, where A, B are unitaries, and suppose we can obtain the "controlled" version of these unitaries as in Sect. 2.3.2. Then the circuit in Fig. 4.3 will work.

[13] we can always incorporate the minus sign into the definition of the unitary U_ℓ.

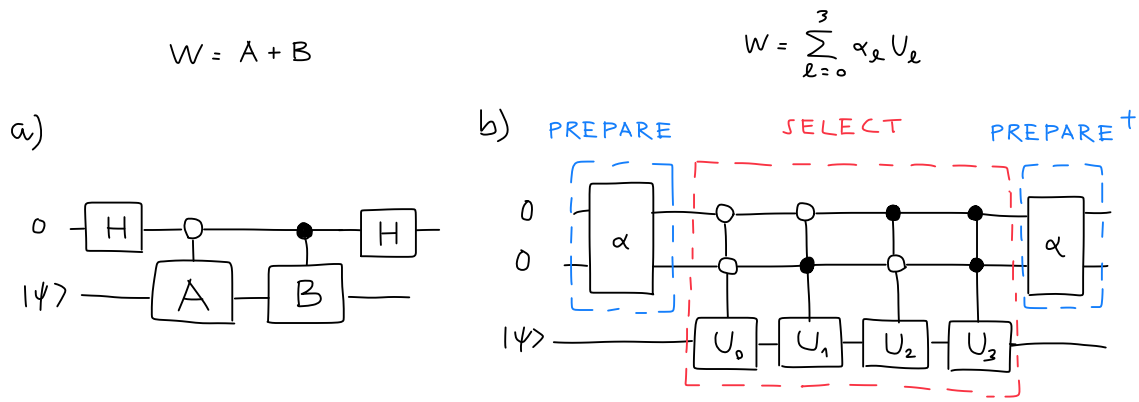

Figure 4.3: Left: Circuit to perform $A+B$. Right: More general case, where the PREPARE and SELECT blocks are highlighted.

.

To see this we can ideally break the evolution at each layer. The initial state reads $|0\rangle\,|\psi\rangle$. After the Hadamard, the ancilla is in superposition, so (neglecting for brevity the factor $1/\sqrt{2}$ each time) $(|0\rangle+|1\rangle)\,|\psi\rangle$. Then the first controlled operation (where the white dot means controlling with '0', rather than '1') activates the application of A: $|0\rangle\,A\,|\psi\rangle+|1\rangle\,|\psi\rangle$, the second controlled operation activates also B: $|0\rangle\,A\,|\psi\rangle+|1\rangle\,B\,|\psi\rangle$. Now the final Hadamard on the ancilla creates $(|0\rangle+|1\rangle)A\,|\psi\rangle+(|0\rangle-|1\rangle)B\,|\psi\rangle$, which after redistributing the components (and restoring the prefactors) reads

$$|\phi\rangle = \frac{1}{2}\left(|0\rangle\,(A+B)\,|\psi\rangle + |1\rangle\,(A-B)\,|\psi\rangle\right). \tag{4.24}$$

This means that, when the ancilla qubit is measured in "0", then we have applied $(A+B)/2$ to the state $|\psi\rangle$.

What is the success probability of measuring '0'? Formally we need to compute

$$\begin{aligned} P_0 &= \langle\phi|\left(|0\rangle\langle 0|\otimes I\right)|\phi\rangle && (4.25)\\ &= \frac{1}{4}\langle\psi|\,(A^\dagger+B^\dagger)(A+B)\,|\psi\rangle && (4.26)\\ &= \frac{1}{4}\langle\psi|\,(2+A^\dagger B+B^\dagger A)\,|\psi\rangle && (4.27)\\ &= \frac{1}{2}\big(1+\frac{1}{2}\langle\psi|\,(A^\dagger B+B^\dagger A)\,|\psi\rangle\,\big), && (4.28) \end{aligned}$$

which is ≤ 1. For instance, if A, B are two Pauli matrices, the anticommutator is 0, such that the success probability is $1/2$.

The procedure can be generalized to the case where the unitaries are more than two (in this case we need more ancillas), and the coefficients of the sum are not equal. In the traditional jargon, the first step of initializing the ancilla register in order to encode the coefficients of the sum is called PREPARE, while the block featuring the controlled operations is called SELECT. The final rotation on the ancilla is PREPARE†.

In the general case of Eq. (4.20), the first operation initializes the ancilla register in such a way that all the binary components $|\ell\rangle$ have the correct amplitudes. Let's define the scale factor

$$\lambda = \sum \alpha_\ell. \tag{4.29}$$

Then the PREPARE operation (acting on the ancilla register) is

$$\mathsf{PREPARE}(\alpha)\,|\mathbf{0}\rangle = \sum_\ell \sqrt{\frac{\alpha_\ell}{\lambda}}\,|\ell\rangle \tag{4.30}$$

which generalizes the previous case where $\alpha_0 = \alpha_1 = 1$, and $\lambda = 2$, that, could be simply performed by an Hadamard gate. Then, the SELECT block, formally implements the following

$$\mathsf{SELECT}_U = \sum_\ell |\ell\rangle\langle\ell| \otimes U_\ell, \tag{4.31}$$

which extends the definition of a "controlled-U_ℓ", to a multi-bit string "ℓ". Defining the "prepared" state $|A\rangle = \mathsf{PREPARE}(\alpha)\,|\mathbf{0}\rangle$ (eq. 4.30), the application of SELECT_U on the register $|A\rangle\,|\psi\rangle$ reads

$$\mathsf{SELECT}_U\,|A\rangle\,|\psi\rangle = \frac{1}{\sqrt{\lambda}}\sum_\ell \sqrt{\alpha_\ell}\,|\ell\rangle\,U_\ell\,|\psi\rangle \tag{4.32}$$

We then use the $\mathsf{PREPARE}^\dagger$ circuit to revert to the computational basis for the ancilla, such that when we measure the multi-qubit $\mathbf{0}$ state, the operation has been performed.

More formally the demonstration proceeds as follows. First of all, let's point out that we cannot explicitly write the full action of $\mathsf{PREPARE}^\dagger$ on a generic state, because we only know its definition when acting on $|\mathbf{0}\rangle$ (cfn. Eq. 4.30). So to proceed further, we can only apply the bra $\langle\mathbf{0}|$ to the resulting state $\mathsf{PREPARE}^\dagger\big(1/\sqrt{\lambda}\sum_\ell \sqrt{\alpha_\ell}\,|\ell\rangle\,U_\ell\,|\psi\rangle\big)$. Now we can calculate the inner product of $\langle\mathbf{0}|\,\mathsf{PREPARE}^\dagger|$ with the state in Eq. 4.32

$$\langle\mathbf{0}\otimes I|\mathsf{PREPARE}^\dagger\big(1/\sqrt{\lambda}\sum_\ell \sqrt{\alpha_\ell}\,|\ell\rangle\,U_\ell\,|\psi\rangle\big) \tag{4.33}$$

$$\langle\mathbf{0}|\mathsf{PREPARE}^\dagger\big(1/\sqrt{\lambda}\sum_\ell \sqrt{\alpha_\ell}\,|\ell\rangle\,U_\ell\,|\psi\rangle\big) \tag{4.34}$$

$$\frac{1}{\lambda}\sum_{j,\ell}\sqrt{\alpha_j\alpha_\ell}\,\langle j|\ell\rangle\,U_\ell\,|\psi\rangle \tag{4.35}$$

$$\frac{1}{\lambda}\sum_\ell \alpha_\ell U_\ell\,|\psi\rangle\,, \tag{4.36}$$

where we used the fact that the identity I acts on the $|\psi\rangle$ register, then the definition of Eq. 4.30, and $\langle j|\ell\rangle = \delta_{j,\ell}$ because these are basis states of the ancilla register. Notice that we were able to perform the calculation without a recipe for evaluating $\mathsf{PREPARE}^\dagger\,|\ell\rangle$, if we are interested in evaluating only the matrix element corresponding to the ancilla zero state.

We have therefore proven that

$$W/\lambda = \langle\mathbf{0}|\,\mathsf{PREPARE}^\dagger\;\mathsf{SELECT}_U\;\mathsf{PREPARE}\,|\mathbf{0}\rangle\,, \tag{4.37}$$

i.e. $\mathsf{PREPARE}^\dagger$ SELECT $\mathsf{PREPARE}$ block-encodes W/λ in the $\langle \mathbf{0}| \cdots |\mathbf{0}\rangle$ block. The normalization is essential because the row and column of the *larger* unitary matrix needs to sum to one, but can be arbitrarily large.

One important aspect to comment on is the success probability. From this, we see that the probability of success is

$$||W|\psi\rangle||^2/\lambda^2, \tag{4.38}$$

which can be in principle very small. There are however methods, called *amplitude amplification* which can increase this probability (cfn. 7.1). Finally, it is assumed that each $\mathsf{PREPARE}$, and SELECT steps are efficient.

In Chapters 9 and 10 we will more rigorously see LCU in action to qualitatively improve the runtime of hamiltonian simulation.

4.5 Finding ground states through dynamics

Interestingly, hamiltonian simulation can be used also to access ground state properties. The primitive which is used is the Quantum Phase Estimation algorithm.

We saw that the eigenvalues of operators H in the exponent of unitary operator $U = e^{-iHt}$ result in a *phase*, such that measuring the phase results in measuring the eigenvalue. Let us first assume that $|\psi_n\rangle$ is an eigenstate of H with eigenvalue E_n. Under time evolution $e^{iHt}|\psi_n\rangle = e^{iE_nt}|\psi_n\rangle$ the state picks up a phase $\phi = E_nt$.

The general idea is to introduce (again) an ancilla qubit. The circuit in Fig. 4.4 (left) allows us, in principle, to evaluate ϕ assuming the existence of an oracle U that applies the desired unitary operator. To be practical, we can assume that this whole controlled-U operation is itself a Trotter expansion of e^{iHt}, in the case of physics problems, though QPE is much more general.

To see how the circuits allows us to compute the phase through measurements we follow step by step the evolution, similarly to what we did when discussing the LCU case. The sequence of state transformation reads

$$|0\rangle\ |\phi_n\rangle \rightarrow \tag{4.39}$$

$$\frac{1}{\sqrt{2}}\big(|0\rangle + |1\rangle\big)\ |\phi_n\rangle = \frac{1}{\sqrt{2}}\big(|0\rangle|\phi_n\rangle + |1\rangle|\phi_n\rangle\big) \rightarrow \tag{4.40}$$

$$\frac{1}{\sqrt{2}}\big(|0\rangle|\phi_n\rangle + |1\rangle U|\phi_n\rangle\big) = \frac{1}{\sqrt{2}}\big(|0\rangle|\phi_n\rangle + |1\rangle e^{i\phi_n}|\phi_n\rangle\big). \tag{4.41}$$

So while, the bottom register remains unchanged in its $|\phi_n\rangle$ state, the ancilla qubit picks up a phase in its $|1\rangle$ component[14] Now, a measurement at this point would not be able to extract such information, as we would collapse the ancilla state in '0' with 0.5 probability and in '1' with $|e^{i\phi_n}/\sqrt{2}|^2 = 0.5$ probability.

[14]this case, where the ancilla qubit picks up a phase after controlling the execution of an operator acting on another register, is called *phase kick-back*.

The final Hadamard rotation transfers this information into the *amplitudes* of the two states. We have indeed

$$\frac{1}{2}\left[\,|0\rangle\,(1+e^{i\phi_n})\,|\phi_n\rangle + |1\rangle\,(1-e^{i\phi_n})\,|\phi_n\rangle\,\right], \tag{4.42}$$

such that the probability of measuring '0' is now $(1+\cos\phi_n)/2$ making the value of ϕ_n accessible to measurements in the computational basis.

Now, if we relax the condition that we prepared the exact eigenstate $|\psi_n\rangle$ of U, but we have a generic quantum state

$$|\psi\rangle = \sum_n c_n\,|\psi_n\rangle \tag{4.43}$$

when we measure the ancilla register we will measure the phase ϕ_n with probability $|c_n|^2$. In this case, we will also collapse the state register in the eigenvector $|\psi_n\rangle$. It's clear that, if we want to find the ground state E_0, this procedure will have a success probability of $|c_0|^2$, so the state we need to prepare must have a good overlap with the ground state.

This method, although simple to rationalize, is inefficient because it relies on repeated measurements to accumulate sufficient statistics to resolve the measurement's imbalance between the two read-outs.

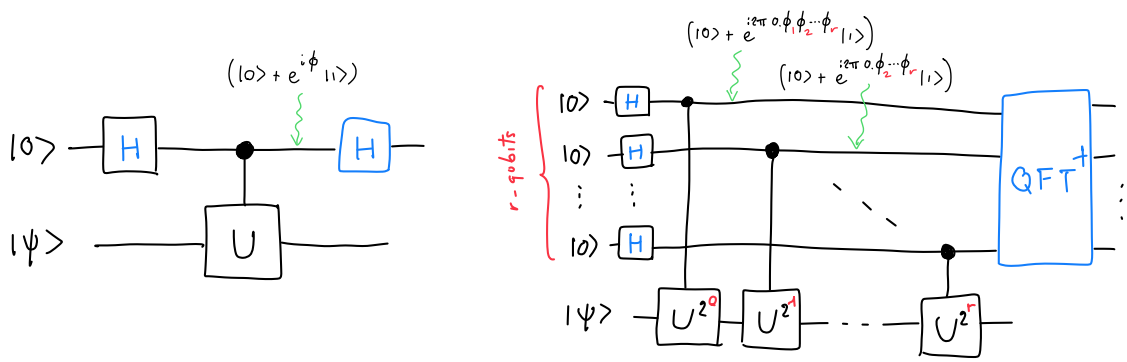

Figure 4.4: Left: One qubit QPE. Right: Kiteav QPE. The rightmost ancilla transformation is depicted in blue, as QFT on one qubit reduces to the H gate. Notice a typo in this panel: the last controlled unitary should be $U^{2^{r-1}}$, as the index of the ancillas ranges from 0 to $r-1$. .

4.5.1 Quantum Phase estimation with Quantum Fourier Transform

The following algorithm is the canonical one (by Kitaev) and here we expand the presentation of Ref. (14) more pedagogically.[15] Perhaps the first thing to notice to understand the notation is that, since the eigenvalues λ's of a unitary operator U has a unitary norm, they can be

[15] if you are already confident about the demonstration of QPE, feel free to skip this subsection.

written as $e^{i2\pi\phi}$, where $0 \leq \phi < 1$. The phase ϕ can be written as a binary expansion

$$\phi = 0.\phi_1\phi_2\cdots\phi_r \quad \rightarrow \quad \sum_{i=1}^{r} \phi_i 2^{-i} \tag{4.44}$$

where the ϕ_i's can be either 0 or 1.[16] Notice that now we drop the index n from $\phi_n = \phi$, as to not confuse the index of the eigenvalue, with the one of the binary expansion of the phase.

Kitaev method introduces r ancilla qubits. Each ancilla qubit controls the application of a given power of the unitary U, i.e $U, U^2, U^4, \cdots, U^{2^{r-1}}$, and then measures all bits to receive a binary representation of the phase at once (cfn. Fig. 4.4).

The algorithm can be best understood step-by-step in this way:

Let's start with $r = 1$, and *assume* that the incoming register state $|\psi\rangle$ is an eigenstate of U^{2^0}, with eigenvalues

$$\lambda = e^{i2\pi 0.\phi_1}, \tag{4.45}$$

where we repeat that $\phi_1 = \{0, 1\}$. This is of course a strong assumption[17], but I find it easier to rationalize the effect of the circuit starting from this case, and then add more ancilla to resolve an arbitrary phase with r bits. Then, the application of the first two operations (H and c-U$^{2^0}$) produces the same state as in Eq. 4.41, but written using the new notation:

$$\big(\,|0\rangle + e^{i2\pi 0.\phi_1}\,|1\rangle\,\big) \otimes |\psi\rangle \tag{4.46}$$

omitting the prefactor $\frac{1}{2}$ for clarity, and explicitely writing the $\otimes$ symbol just for easier visualization of the separate subregisters.

Now, let's use $r = 2$, and assume that now the eigenvalues can be written exactly as

$$\lambda = e^{i2\pi 0.\phi_1\phi_2}, \tag{4.47}$$

and the incoming state $|\psi\rangle$ is again eigenstate of $U = U^{2^0}$. The state after the first controlled c-U$^{2^0}$ operation, but before the second c-U$^{2^1}$ reads as before

$$\underbrace{\big(\,|0\rangle + e^{i2\pi 0.\phi_1\phi_2}\,|1\rangle\,\big)}_{\text{ancilla 1}} \otimes \underbrace{\big(\,|0\rangle + |1\rangle\,\big)}_{\text{ancilla 2}} \otimes |\psi\rangle\,, \tag{4.48}$$

because the $0.\phi_1\phi_2 = \phi$ is by definition the 'new' phase of U, and we introduce the second ancilla qubit, which at this point has just been initialized in superposition.
Now we proceed with the second c-U$^{2^1}$ operation, controlled now by the second ancilla, unused so far. Since $U^{2^1} = UU$, $|\psi\rangle$ is still an eigenvector. Moreover the phase of U^2 is twice the phase of U, i.e. $U^2\,|\psi\rangle = e^{i2\pi(2\phi)}\,|\psi\rangle$.
Now, it comes the trick. First, it is easy to prove that twice the phase $0.\phi_1\phi_2$ is $\phi_1.\phi_2$, exactly

[16] For instance $0.5_{\text{dec}} = 0.1_{\text{bin}}$, or $0.75_{\text{dec}} = 1/2 + 1/4 = 0.11_{\text{bin}}$

[17] i.e. the spectrum of U is highly degenerate with only two distinct values, $e^{-i2\pi 0.0} = 1$, $e^{-i2\pi 0.1}$.

as a multiplication by 10 of a decimal number shifts all the digits to the left by one position[18]. Then, the exponent simplifies to

$$e^{i2\pi(2\cdot 0.\phi_1\phi_2)} = e^{i2\pi\ \phi_1.\phi_2} \equiv e^{i2\pi(\phi_1+0.\phi_2)} = e^{i2\pi\phi_1}e^{i2\pi 0.\phi_2} = e^{i2\pi 0.\phi_2}, \tag{4.49}$$

where we use the fact that $e^{i2\pi\phi_1} = 1$ because ϕ_1 is integer. Therefore, the state after the second controlled rotation reads

$$\underbrace{\big(\,|0\rangle + e^{i2\pi 0.\phi_1\phi_2}\,|1\rangle\,\big)}_{\text{ancilla 1}} \otimes \underbrace{\big(\,|0\rangle + e^{i2\pi 0.\phi_2}\,|1\rangle\,\big)}_{\text{ancilla 2}} \otimes |\psi\rangle\,. \tag{4.50}$$

The general k-bit case, is a straighforward generalization of the previous steps, after proving that

$$e^{i2\pi 2^k\phi} = e^{i2\pi 0.\phi_k\phi_{k+1}\cdots}, \tag{4.51}$$

such that the quantum state produced after all the r sequence of controlled-U reads

$$\big(\,|0\rangle + e^{i2\pi 0.\phi_1\phi_2\cdots\phi_r}\,|1\rangle\,\big) \otimes \big(\,|0\rangle + e^{i2\pi 0.\phi_2\cdots\phi_r}\,|1\rangle\,\big) \otimes \cdots \otimes \big(\,|0\rangle + e^{i2\pi 0.\phi_r}\,|1\rangle\,\big) \otimes |\psi\rangle\,. \tag{4.52}$$

Now, the final step is to find a way to read-out the r bits $\{\phi_1, \phi_2, \cdots, \phi_r\}$. While a simple layer of Hadamard gates is not enough anymore, it is very convenient that there exists an operator that does exactly what we want, the (inverse) quantum Fourier transform (QFT)[19](14):

$$\mathsf{QFT}^\dagger\big[\big(\,|0\rangle + e^{i2\pi 0.\phi_1\cdots\phi_r}\,|1\rangle\,\big) \otimes \big(\,|0\rangle + e^{i2\pi 0.\phi_2\cdots\phi_r}\,|1\rangle\,\big) \otimes \cdots \otimes \big(\,|0\rangle + e^{i2\pi 0.\phi_r}\,|1\rangle\,\big)\big] = \tag{4.53}$$

$$= |\phi_r\rangle \otimes |\phi_{r-1}\rangle \otimes \cdots \otimes |\phi_2\rangle \otimes |\phi_1\rangle\,. \tag{4.54}$$

The circuit of Fig. 4.4 (right) therefore allows us to extract the binary format of the phase ϕ, by simply measuring the ancilla register. Notice also that the QFT and the inverse can be performed using $\mathcal{O}(r^2)$ gates, so the whole procedure is efficient.

In the general case, where the phase is not exactly written as a finite $r-$bit expansion, the resulting measurements will not be exactly peaked on just one bitstring, but we will obtain an histogram of read-outs. The most frequent outcomes will be the strings that, in binary format, represent the values just below and just above the exact one. In principle, by increasing r, we will increase the resolution of the estimate. More rigorously, and following Ref. (14), to obtain an estimate of the phase which is precise up to n bits, we need to use a slightly larger number of ancilla qubits. In particular, to obtain a binary estimate of the phase, precise to n bits, with success probability $p = 1 - p_{\text{fail}}$, requires

$$r = n + \left\lceil \log_2\left(2 + \frac{1}{2p_{\text{fail}}}\right)\right\rceil. \tag{4.55}$$

As discussed, this is just the error introduced by the $r-$bit truncation of the precision for the phase read-out, assuming we prepared the exact eigenstate $|\psi\rangle$.

[18] $2\cdot 0.\phi_1\phi_2 = 2\cdot(\phi_1/2 + \phi_2/4) = \phi_1 + \phi_2/2 = \phi_1.\phi_2$.

[19] see e.g. Nielsen and Chuang book for the equivalence of the two definitions of the QFT.

4.5.2 Errors and runtime for energy estimation

Now we can combine all sources of errors to understand how feasible is this strategy for computing ground-state energy with hamiltonian simulations. Notice that this final analysis contains details that are never properly discussed even in highly cited literature(15), so here I will mainly follow the arguments put forward in Ref.(16).

First of all, let's remember that in our case

$$U = e^{iHt}, \tag{4.56}$$

such that $U^{2^k} = e^{iH2^k t}$, and that we will need a Trotterized version of that. In principle, we would be tempted to use a very small evolution time t, requiring the smallest amount of Trotter steps. However, the resulting phase $\phi = Et$, would also be very small, requiring a lot of n-bits of precision to be resolved. So there is no gain in shrinking artificially the evolution time to 'save' Trotter steps. However, there is a rough 'a priori' recipe to tune t, which takes into account an upper bound of range of the spectrum of H, i.e $W_H > \text{range}[H] = E_{\max} - E_{\min}$:

$$t\ W_H = 2\pi \tag{4.57}$$

such that there is a one-to-one correspondence between an energy eigenvalue and a phase eigenvalue. Clearly, the better is the bound of tW_H, the smaller is r, because we will "populate" efficiently all the 2π range with eigenvalues. As a matter of fact, one case use the evolution time t to rescale the range, or one can set $t = 1$ and rescale the Hamiltonian. What is important is that the phase spectrum fits a tightly the range 2π.

For read-out simplicity, we can further preprocess the hamiltonian in such a way that all energy eigenvalue are positive, such that the energy will be directly mapped to a positive phase between 0 and 2π. If we don't do this, the negative eigenvalues would simply appear in the $[\pi, 2\pi)$ sector. Notice that range of a physical hamiltonian W_H can be usually estimated without knowing the ground state E_0 a priori. For instance, in the case of a Pauli sum Hamiltonian

$$H = \sum_k h_k P_k, \tag{4.58}$$

one can bound the range summing up all the absolute value of the coefficients, $W_H = \sum_k |h_k|$.

What remain to be study is the runtime of the QPE to measure the energy with a target precision.

Let's call N_U, the number of applications of the "minimal unit" unitary $U = e^{iHt}$. Then, it's clear that the operator U^{2^k}, controlled by the ancilla at index $k+1$, requires 2^k applications of U to be realized. Since adding a new ancilla means doubling the total number of unitaries, the final number of unitaries for a $r-$bit QPE is $N_U \propto 2^r$. The total evolution time, T, is proportional to N_U.

To be more precise, and setting $W_H = 1$ (since we can always imagine rescaling the hamiltonian) we can set $t = 2\pi$, such that the evolution induced by U^{2^0} is 2π, for U^{2^1} is 4π, and for the last $U^{2^{r-1}}$ is $2^r\pi$. Summing up all the time-steps, we find that the total evolution time is $T = 2^{r+1}\pi$. Let us also define the 'discretization' precision error as $\epsilon = 1/2^n$. From

Eq. 4.55 we calculate that we need $r = n + 2$ ancillas for a success probability of 50%. Therefore the total time is

$$T = 2^{r+1}\pi = 2^{n+3}\pi = 8\pi 2^n := \frac{8\pi}{\epsilon}, \tag{4.59}$$

for a success probability of 1/2. This means that on average we would need to repeat the algorithm twice to observe success, so the full cost, expressed in T, is $T = 16\pi/\epsilon$.

Then, there is a second source of increased cost, which is connected with the initial state preparation. As we saw, the nice thing about QPE is that, the state register collapses into the eigenstate ψ_n, when the phase ϕ_n is read-out. This happens with probability $|c_n|^2$ (cfn. Eq. 4.43), such that, if we aim to read-out the ground state energy, we need to repeat the QPE algorithm $1/|c_0|^2$ times, i.e. inversely proportional to the overlap.

Bibliography

[1] A. Polkovnikov, K. Sengupta, A. Silva, and M. Vengalattore, "Colloquium: Nonequilibrium dynamics of closed interacting quantum systems," *Rev. Mod. Phys.*, vol. 83, pp. 863–883, Aug 2011.

[2] R. P. Feynman, "Simulating physics with computers," *International Journal of Theoretical Physics*, vol. 21, pp. 467–488, June 1982.

[3] S. Lloyd, "Universal quantum simulators," *Science*, vol. 273, no. 5278, pp. 1073–1078, 1996.

[4] M. Schmitt and M. Heyl, "Quantum many-body dynamics in two dimensions with artificial neural networks," *Phys. Rev. Lett.*, vol. 125, p. 100503, Sep 2020.

[5] G. Magnifico, T. Felser, P. Silvi, and S. Montangero, "Lattice quantum electrodynamics in (3+ 1)-dimensions at finite density with tensor networks," *Nature communications*, vol. 12, no. 1, p. 3600, 2021.

[6] H. Aoki, N. Tsuji, M. Eckstein, M. Kollar, T. Oka, and P. Werner, "Nonequilibrium dynamical mean-field theory and its applications," *Rev. Mod. Phys.*, vol. 86, pp. 779–837, Jun 2014.

[7] Y. Kim, A. Eddins, S. Anand, K. X. Wei, E. Van Den Berg, S. Rosenblatt, H. Nayfeh, Y. Wu, M. Zaletel, K. Temme, *et al.*, "Evidence for the utility of quantum computing before fault tolerance," *Nature*, vol. 618, no. 7965, pp. 500–505, 2023.

[8] J. Tindall, M. Fishman, M. Stoudenmire, and D. Sels, "Efficient tensor network simulation of ibm's kicked ising experiment," 2023.

[9] T. Begusic and G. K.-L. Chan, "Fast classical simulation of evidence for the utility of quantum computing before fault tolerance," 2023.

[10] A. J. Daley, I. Bloch, C. Kokail, S. Flannigan, N. Pearson, M. Troyer, and P. Zoller, "Practical quantum advantage in quantum simulation," *Nature*, vol. 607, pp. 667–676, July 2022.

[11] A. M. Childs, Y. Su, M. C. Tran, N. Wiebe, and S. Zhu, "Theory of trotter error with commutator scaling," *Physical Review X*, vol. 11, no. 1, p. 011020, 2021.

[12] A. M. Childs, A. Ostrander, and Y. Su, "Faster quantum simulation by randomization," *Quantum*, vol. 3, p. 182, sep 2019.

[13] A. Smith, M. Kim, F. Pollmann, and J. Knolle, "Simulating quantum many-body dynamics on a current digital quantum computer," *npj Quantum Information*, vol. 5, no. 1, p. 106, 2019.

[14] M. A. Nielsen and I. L. Chuang, *Quantum Computation and Quantum Information: 10th Anniversary Edition*. Cambridge University Press, 2010.

[15] S. McArdle, S. Endo, A. Aspuru-Guzik, S. Benjamin, and X. Yuan, "Quantum computational chemistry," *arXiv preprint arXiv:1808.10402*, 2018.

[16] M. Reiher, N. Wiebe, K. M. Svore, D. Wecker, and M. Troyer, "Elucidating reaction mechanisms on quantum computers," *Proceedings of the National Academy of Sciences*, vol. 114, p. 7555–7560, 6 2017.

Chapter 5

Physics-to-qubits mappings

In the previous chapters, we applied algorithms assuming to have Hamiltonians as sums of Pauli matrices, postulating that this is a generic form, although not so evident at first glance. In this chapter, we will show why very common Hamiltonians in physics and chemistry can actually be written in this way. This was already evident for lattice models where qubit and spin 1/2 operators are already equivalent. In general, this chapter addresses the topic of how to perform an encoding of a specific problem, for example in chemistry, into a qubit Hilbert space, and how to translate the operators describing the system in the physical space into that of the qubits. At the end of the chapter, we will also discuss a counterexample in which the Hamiltonian of the physical system does not admit an efficient translation as a sum of Pauli strings, yet it is efficiently computable in another framework.

5.1 Fermionic hamiltonians

We will start with this kind of physical system because is the most important for chemistry and physics. The most general fermionic-hamiltonian reads

$$H = \sum_{p,k} h_{pk} a_p^\dagger a_k + \sum_{p,q,r,s} h_{pqrs} a_p^\dagger a_q^\dagger a_r a_s, \tag{5.1}$$

where $a_p^\dagger$ and a_p are the fermionic creation and destruction operators, which create (annihilate) a particle in the spin-orbital p. While the name "orbital" is more chemistry-oriented, we could have also used the name "mode" or "site" which are more appropriate for condensed matter. What matters is that these operators obey **fermionic anti-commutation** relations

$$\begin{aligned} \{a_p, a_q^\dagger\} &= a_p a_q^\dagger + a_q^\dagger a_p = \delta_{pq}, \\ \{a_p, a_q\} &= \{a_p^\dagger, a_q^\dagger\} = 0. \end{aligned} \tag{5.2}$$

The computational basis in this case is a Fock state, which stores the *occupation* number of the orbitals. Let's also fix some definition so as to not generate confusion between condensed matter and chemistry. While *electrons* are the most popular *fermions*, the latter is a more general class. Electrons possess also a spin *up* or *down*, but there exist also spinless-fermions. This is precisely our notation.

5.1.1 Fock state encoding

Each single particle "orbital" p, is a spin-orbital. Therefore it can only host one fermion. A molecular orbital of quantum chemistry instead may host the *up* and the *down* particle. Our notation is however general, as we can think of the spin-orbital p to be the designated place for the spin-*up* fermion, in the molecular orbital ϕ_i (or site, in case of the Hubbard model), and the spin-orbital $p+1$ to be the one hosting the spin-*down* component of the same molecular orbital, or site ϕ_i.

For instance, according to this convention, Eq. 5.1 reduces to the Hubbard model when p and k, in the first sum, label spin-orbitals belonging to the same spin-sector (because an *up*-electron cannot change spin while hopping), and $p = r$, $q = s$, where p and q label two spin orbitals localized on the same site, but with opposite spin components. Then $h_{pk} = h_{i,i+1} = t$ is the hopping term, and $h_{pqpq} = h_{i\uparrow,i\downarrow} = U$ is the Couloumb repulsion term.

We can therefore consider the system to be defined in terms of spin-less fermions, doubling the total number of orbitals in case of electrons (or spinful fermions). In the case of one lattice site, or molecular orbital, this site can have four configurations: $\{\emptyset, \uparrow, \downarrow, \uparrow\downarrow\}$, i.e. the site can be empty, occupied by one of the two kind of fermions, or doubly occupied. This physical picture can be represented in terms of **occupancy** (un-occupancy) of two spin-orbitals, where the left (right)-most label the occupancy of the *up* (*down*) fermionic flavour. We can label with '0' the empty spin-orbital, and with '1' the occupied case: the above four physical combinations can be expressed using a binary notation, which is well suited for quantum computing:

$$\{\ \emptyset, \uparrow, \downarrow, \uparrow\downarrow\} \xrightarrow{\text{mapping}} \{|00\rangle, |10\rangle, |01\rangle, |11\rangle\}. \tag{5.3}$$

This completely defines our encoding. Now suppose to have two sites, where for instance, we have an *up*-electrons at site 1, and a *down*-electron at site 2. This particular electronic configuration reads

$$|\uparrow_1, \downarrow_2\rangle \xrightarrow{\text{mapping}} |1001\rangle, \tag{5.4}$$

where we need to be consistent with the *ordering* of the labels of the spin-orbitals. The symmetric case where now the electrons occupies the opposite sites would be $|\uparrow_2, \downarrow_1\rangle = |0110\rangle$.

Further, if we want to describe a physical quantum state where the two electrons delocalize, as to lower the kinetic energy, it could be done by

$$|\psi\rangle = \alpha\,|1001\rangle + \beta\,|0110\rangle. \tag{5.5}$$

More generally, the quantum state[1] describing two-electrons with opposite spins on two sites can be given by the following state

$$|\psi\rangle = \alpha\,|1001\rangle + \beta\,|0110\rangle + \gamma\,|1100\rangle + \delta\,|0011\rangle, \tag{5.6}$$

where the two additional terms describe the two electrons being on the same site (left or right). This wavefunction, which has a physical meaning to us, can be encoded in a four-qubit register. In this encoding, the spin-z and particle number conservations laws, which come from the physical theory, shows up in constraints in the number of '1's in the bit-strings

[1] the usual normalization condition on the coefficients is implied.

and their placement[2]

Turns out that this register can also store the electronic wavefunction of a H_2 molecule, in the minimal basis made of two spacial molecular orbitals: ϕ_g (this in turn constructed with the symmetric combination of the two localized atomic orbitals) and ϕ_u, in chemistry jargon. The state $|1100\rangle$ state describes the so called Hartree-Fock state, where both electrons occupy the lowest energy (spacial) molecular orbital ϕ_g.

The important fact is that, despite introducing some symmetries which limit the size of the Hilbert space, the computational cost of a fermionic simulations still scales exponentially. Indeed, if we consider M spin-orbitals and N electrons, there are combinatorially many, $\binom{M}{N}$, ways to place N electrons on M (spin-)sites. In principle, a quantum state that may specify the ground state (or a time-evolved state) of a fermionic hamiltonian, requires a linear combination of exponentially many configurations, each being a M-bit strings, with N '1's and $M-N$ '0's. This state **can compactly be stored in superposition** by a M qubit quantum register instead.

This is the main argument in favor of performing quantum chemistry using a quantum computer, that here we put forward without having to introduce much quantum chemistry jargon.

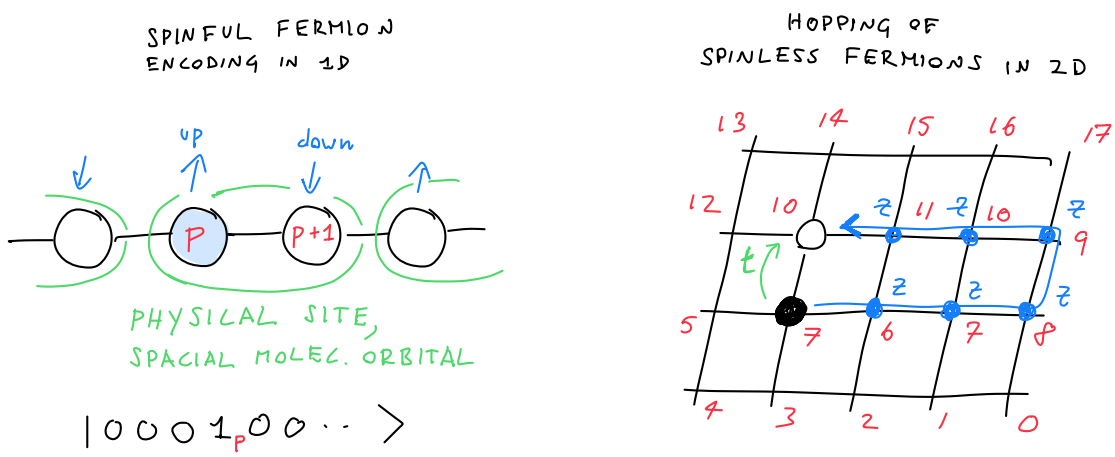

Figure 5.1: Left: A possible convention for encoding a Hubbard model in 1D. Each physical lattice site can host two fermionic species, whose spin-orbital are labeled with adjacent integer. The occupied spin-orbital p is translated into an '1' at bit p of the corresponding encoded state. Right: Hopping of a spinless (for simplicity) fermion from site 7 to site 10, through the action of the operator $t\, a^\dagger_{10} a_7$. The two lattice sites are close in space, but distant in the chosen ordering. It is not possible to define an ordering that preserves the locality of all four hopping terms to the mapped qubit operators.

.

[2]for instance the basis state $|1010\rangle$ would not be allowed since it encodes two *up* spins.

5.1.2 Jordan-Wigner transformation

After the definition of the encoding, i.e the mapping between a 'physical' quantum state into a quantum state which live in a $M-$qubit Hilbert space, we need to translate the physical fermionic Hamiltonian, Eq. 5.1 into a qubit Hamiltonians, like the ones we defined generically in Chapter 4. Recall that a qubit is not a fermionic particle.

Given our binary encoding of a Fock state, it would be tempting to define the creation operator as the spin-1/2 raising operator,

$$a_p^\dagger \stackrel{?}{=} \sigma_p^- = |1\rangle\langle 0| = \frac{1}{2}(X_p - iY_p) = \begin{bmatrix} 0 & 0 \\ 1 & 0 \end{bmatrix}. \tag{5.7}$$

Notice here that we need to use opposite convention compared to the spin-1/2 *raising* operator, as $\sigma^- |0\rangle = |1\rangle$, while $\sigma^+ |1\rangle = |0\rangle$.[3]

This definition is however not correct exactly because the Pauli matrices do not satisfy the fermionic anticommutation relation. In short, the order in which we *create* a particle in the Fock state matters:

$$a_1^\dagger a_2^\dagger |00\rangle = |11\rangle, \quad a_2^\dagger a_1^\dagger |00\rangle = -|11\rangle, \tag{5.8}$$

because in the second case, we create the fermion in the second orbital, and after that, we create the first in orbital one. This purely fermionic constraint is not captured by the operator $\sigma_i^- \sigma_j^-$. Notice that, the encoding defines an *ordering* of the spin-orbital in the Fock state, and this is essential to satisfy the commutation relation, so in practical calculations, the ordering must be consistent along the steps.

In a more general fashion, if we denote a Fock state with M fermionic modes as

$$|\psi\rangle = |f_{M-1}, \ldots, f_1, f_0\rangle \tag{5.9}$$

where $f_p = \{0, 1\}$ can only take binary values, then (single-particle) fermionic creation and annihilation operators are formally defined as

$$\begin{aligned} a_p^\dagger |f_{M-1}, \ldots, f_0\rangle &= \delta_{f_p,0}(-1)^{\sum_{i=0}^{p-1} f_i} |f_{M-1}, \ldots, f_p \oplus 1, \ldots, f_0\rangle \\ a_p |f_{M-1}, \ldots, f_0\rangle &= \delta_{f_p,1}(-1)^{\sum_{i=0}^{p-1} f_i} |f_{M-1}, \ldots, f_p \oplus 1, \ldots, f_0\rangle, \end{aligned} \tag{5.10}$$

where the first delta, i.e. $\delta_{f_p,0}$ ensures that we can create a particle, only if the spin-orbital p is empty,[4] and the phase term $(-1)^{\sum_{i=0}^{p-1} f_i}$ restores the correct sign by counting the number of occupied modes *before* the orbital p. The spin-orbital occupation operator is given by

$$\hat{n}_i = a_i^\dagger a_i, \tag{5.11}$$

and counts the number of fermions in a given fermionic mode.

[3] this is due to the convention $|\uparrow\rangle = |0\rangle, |\downarrow\rangle = |1\rangle$. To increase the occupation from 0 to 1, we need to actually use the lowering spin-1/2 operator.

[4] $\oplus$ denotes addition modulo 2 and it is just a general notation to ensure that $1 \oplus 1 = 0$.

To match these definitions, the fermionic operators, written in terms of qubit operators needs, read

$$\begin{aligned} a_p &= \frac{1}{2}(X+iY)_p \otimes Z_{p-1} \otimes \cdots \otimes Z_0, \\ a_p^\dagger &= \frac{1}{2}(X-iY)_p \otimes Z_{p-1} \otimes \cdots \otimes Z_0, \end{aligned} \tag{5.12}$$

where the $\frac{1}{2}(X+iY)_p$ and $\frac{1}{2}(X-iY)_p$ spin *minus* and *plus* operators change the occupation number of the target mode p, while the string of Z operators introduce the phase factor $(-1)^{\sum_{i=0}^{p-1} f_i}$. This convention is called **Jordan-Wigner mapping**, and maps any second quantised fermionic Hamiltonian into a linear combination of products of single-qubit Pauli operators

$$H = \sum_j h_j P_j \tag{5.13}$$

where h_j is a real scalar coefficient. Each term P_j in the Hamiltonian is typically referred to as a *Pauli string*. In this way we recover the general assumptions on the format of physical Hamiltonians.

The presence of the strings of operators may be unnoticed for local operators, such as the density at site i, since

$$n_i = a_i^\dagger a_i = \sigma_i^- \big(Z_{i-1} \cdots Z_0\big) \sigma_i^+ \big(Z_{i-1} \cdots Z_0\big) = \sigma_i^- \sigma_i^+ = \frac{1}{2}(I - Z_i), \tag{5.14}$$

where the strings $\big(Z_{i-1} \cdots Z_0\big)$ coming from the two operators cancel out since $Z_j Z_j = I$, for each $j < i$. The situation would be different for operators such as $a_i^\dagger a_j$, where i, j are not consecutive integer labels in the chosen ordering. This will lead to strings of Z's:

$$a_i^\dagger a_j = \sigma_i^- \big(Z_{i-1} \cdots Z_{j+1}\big) \sigma_j^+ = \frac{1}{4}(X - iY)_i \big(Z_{i-1} \cdots Z_{j+1}\big)(X + iY)_j \tag{5.15}$$

therefore to *four* Pauli strings, after expressing σ_i^+, σ_i^- as combination of X and iY.[5] Overall, the Jordan-Winger mapping introduces non-locality even if the parent fermionic hamiltonian is local, this can be seen already by considering a 2D lattice hamiltonian with only hopping terms (see Fig. 5.1).

5.1.3 Circuits for hamiltonian simulations

In this Section, we explicitly write the circuits corresponding to some fermionic operators, for real-time dynamics. The simplest case is the one-body operator

$$\exp\big(-i\ t\ h_{pp} a_p^\dagger a_p\big). \tag{5.16}$$

This operator will simply multiply by a phase $e^{-ith_{pp}}$ the state if the orbital p is occupied and will do nothing if p is empty. This operator remains "local" also in the qubit operator form a can be implemented by a single-qubit gate, the P gate[6] defined in Eq. 2.2.1.

[5] The following equalities holds $Z\sigma^+ = \sigma^+$, $\sigma^+ Z = -\sigma^+$, $Z\sigma^- = -\sigma^-$ and $\sigma^- Z = \sigma^-$. The first one explains why the Z_j operator is not present in Eq. 5.15.

[6] we defined this gate with a positive phase, so here we put a minus sign to the angle.

The second operator we consider is the *hopping* operator. We consider directly a generic operator, plus is hermitean conjugate

$$\exp\big(-i\ t\ h_{pq}(a_p^\dagger a_q + a_q^\dagger a_p)\big). \tag{5.17}$$

Let's first consider each type of hamiltonian term, and then its exponentiation. Following Eq. 5.15 each term in the exponent produces four Pauli strings, for a total of eight. Four of them cancel out due to the alternating sign of the XY combination, and the other four terms sum up to

$$\frac{h_{pq}}{2}\left[X_p\big(Z_{p-1}\cdots Z_{q+1}\big)X_q + Y_p\big(Z_{p-1}\cdots Z_{q+1}\big)Y_q\right]. \tag{5.18}$$

At first glance, the exponentiation of the sum of these two operators would imply a Trotter error. However, and this is very rarely discussed in literature, the two terms commute [7], such that the circuit in Fig. 5.2(b) perform the exact time evolution of Eq. 6.1.1.

The more frequent kind of operator is

$$\exp\big(-i\ t\ h_{pqrs}(a_p^\dagger a_q^\dagger a_r a_s + a_r^\dagger a_s^\dagger a_p a_q)\big), \tag{5.19}$$

which in the language of chemistry, is responsible for *double-excitations*. In general, there are M^4 of such terms, so they take most of the computational time. Following the same ideas, each term produces a sum of eight Pauli strings operators

$$\frac{h_{pqrs}}{8}\left[\mathcal{M}_p\big(Z_{p-1}\cdots Z_{q+1}\big)\mathcal{M}_q\ \ \mathcal{M}_r\big(Z_{r-1}\cdots Z_{s+1}\big)\mathcal{M}_s\right] \tag{5.20}$$

where the set of $(\mathcal{M}_p, \mathcal{M}_q, \mathcal{M}_r, \mathcal{M}_s)$ Paulis can take eight different combination with an even number of Y elements, e.g (X,X,X,X), (X,X,Y,Y), $(X,Y,X,Y), \cdots, (Y,Y,Y,Y)$ (see also Eq. 5.24 for a concrete example). The circuit for one of such term is shown in Fig. 5.2(c). More circuits, and concrete examples can be found in the seminal Refs. (2).

Notice that, in the worst-case scenario two *ladders* of CNOTS gate may extend along all the M-qubit register. The total number of gates, for hamiltonian simulations of quantum chemistry in second quantization is $\mathcal{O}(M^5)$, since there are $\mathcal{O}(M^4)$ terms in the qubit Hamiltonian and these terms require $\mathcal{O}(M)$ gates, exactly because the Jordan-Wigner transformation introduce non-locality.

This scaling is worst case, and can be improved by optimal compilation and using hamiltonian symmetries. However, when applied to hamiltonian dynamics, it still enables an exponential advantage compared to exact classical simulators.

5.1.4 A worked example: an hydrogen-like molecule with four orbitals

Staying true to the spirit of these notes, we derive a qubit Hamiltonian for a simple yet not entirely trivial example of a fermionic Hamiltonian.

[7] You can check that, for instance, while X and Y do not commute, XX and YY do. It is not obvious to see but two Pauli strings commute if they fail to commute at an even number of indices. This condition is called General commutativity(1), and generalize the qubit-wise commutativity rule, where two strings commute only if all Paulis commute at each index, e.g XI and XZ.

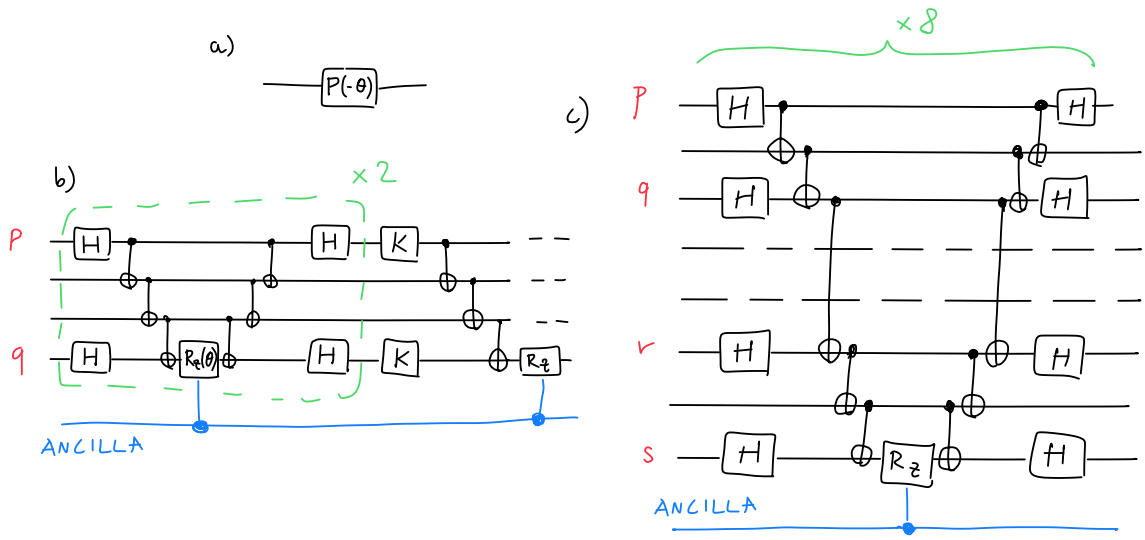

Figure 5.2: a) Single qubit circuit for the density operator. b) Multi qubit circuit for the hopping term h_{pq}. For clarity we only draw the first of the two terms (XX), and only half of the (YY) one. **If used in QPE**, these blocks needs to be 'controlled' so we also add here an ancilla qubit (blue) that controls the application of the unitary. To control the whole unitary it is sufficient to control only the R_Z gate. (see Chapter 2) c) Multi qubit circuit for the h_{pqrs} double excitation term. For clarity we only draw one of the eight similar terms, i.e. the (XXXX) term.

.

Let's imagine that we have four spin orbitals, and we assume a staggered ordering as follows

$$|\phi_0^\uparrow, \phi_0^\downarrow, \phi_1^\uparrow, \phi_1^\downarrow\rangle = |f_0, f_1, f_2, f_3\rangle. \tag{5.21}$$

To be more concrete, this could describe a hydrogen molecule using two spatial molecular orbitals, and therefore, 4 spin orbitals. Where the first two positions are reserved for the lower-energy molecular orbital and the other two for the higher-energy one. We assume that an independent electron calculation has been done previously to determine the form of the orbitals. Assuming this convention $|1, 1, 0, 0\rangle$ would be the Hartree-Fock state, where both electrons occupy the lowest energy spatial orbital ϕ_0. Even more explicitly, the occupation number f_3 of the third fermionic mode means physically that one *down* electron occupy the spin orbital $\phi_1^\downarrow$.

However, these details are not important for now. At the moment, it suffices for us to assume that the occupation of the spin orbitals follows this precise ordering, and from this, the labeling of the hopping operators of the Hamiltonian follows. Since an electron can only hop between spin orbitals with the same spin, the Hamiltonian can only contain terms like $a_2^\dagger a_0$ or $a_3^\dagger a_1$, but not $a_1^\dagger a_0$. Other selection rules (conservation of magnetization) determine that there can be only one type of four-body operator: $a_3^\dagger a_2^\dagger a_1 a_0$, plus its hermitean conjugate $a_0^\dagger a_1^\dagger a_3 a_2$.

HOPPING TERM

$$a_2^\dagger a_0 = \left(\frac{X_2 - iY_2}{2}\right) Z_1 \left(\frac{X_0 + iY_0}{2}\right) = \frac{1}{4}\left(X_2 Z_1 X_0 - iY_2 Z_1 X_0 + iX_2 Z_1 Y_0 + Y_2 Z_1 Y_0\right)$$

$$a_0^\dagger a_2 = \left(\frac{X_0 - iY_0}{2}\right) Z_1 \left(\frac{X_2 + iY_2}{2}\right) = \frac{1}{4}\left(X_0 Z_1 X_2 - iY_0 Z_1 X_2 + iX_0 Z_1 Y_2 + Y_0 Z_1 Y_2\right)$$

$$\Rightarrow a_2^\dagger a_0 + a_0^\dagger a_2 = \frac{1}{4}\left(X_2 Z_1 X_0 - \cancel{iY_2 Z_1 X_0} + \cancel{iX_2 Z_1 Y_0} + Y_2 Z_1 Y_0 + X_0 Z_1 X_2 - \cancel{iY_0 Z_1 X_2} + \cancel{iX_0 Z_1 Y_2} + Y_0 Z_1 Y_2\right)$$

$$= \frac{1}{2}\left(X_0 Z_1 X_2 + Y_0 Z_1 Y_2\right)$$

TWO ELECTRONS EXCITATION

$$a_3^\dagger a_2^\dagger a_1 a_0 = -\frac{1}{16}(X_3 - iY_3)(X_2 - iY_2)(X_1 + iY_1)(X_0 + iY_0)$$

$$= -\sigma_3^- \sigma_2^- \sigma_1^+ \sigma_0^+$$

SIGN OF THE FACTOR

X_3	X_2	X_1	X_0	(+)
X_3	Y_2	Y_1	X_0	(+)
Y_3	Y_2	X_1	X_0	(−)
Y_3	X_2	Y_1	X_0	(+)
X_3	Y_2	X_1	Y_0	(+)
X_3	X_2	Y_1	Y_0	(−)
Y_3	X_2	X_1	Y_0	(+)
Y_3	Y_2	Y_1	Y_0	(+)

ONLY COMBINATIONS POSSIBLE ARE REAL

$\Rightarrow$ EVEN NUMBER OF Y'S

Figure 5.3: Upper panel. Jordan Wigner transformation of one of the hopping terms. Each $a_i^\dagger a_{i+1}$, with $i = 0, 1$, produces four terms. Two of them cancel out when we consider the hermitean conjugate $a_{i+1}^\dagger a_i$. Therefore each term $a_{i+2}^\dagger a_i + a_i^\dagger a_{i+2}$ results into the sum of two Pauli strings, $X_i Z_{i+1} X_{i+2} + Y_i Z_{i+1} Y_{i+2}$. Notice again that the e.g. the string $\sigma_3^- Z_2 Z_1 \sigma_1^+ = \sigma_3^- Z_2 \sigma_1^+$ because $Z\sigma^+ = \sigma^+$. Bottom panel. Sketch of the calculation for the four-indices operator. In this case, 16 Pauli strings are generated by the operator $a_3^\dagger a_2^\dagger a_1 a_0$. It is possible to see that the summation with its hermitean conjugate, $a_0^\dagger a_1^\dagger a_3 a_2$, eliminates all the complex valued terms (similarly to the above case), so we will select only the combination with an even number of Y elements. There are 8 possibilities.

An artificial hamiltonian which conserves charge and magnetization can read

$$H = a_2^\dagger a_0 + a_0^\dagger a_2 + a_3^\dagger a_1 + a_1^\dagger a_3 + a_3^\dagger a_2^\dagger a_1 a_0 + a_0^\dagger a_1^\dagger a_3 a_2 \tag{5.22}$$

where we set all coefficient h's to one for simplicity. This is a specific instance of the general Eq. 5.1.

Let's first analyze how the hopping terms transform under the action of the Jordan-Wigner transformation. The steps are shown in Fig. 5.3. Each of the single electron excitation operator transforms into

$$a_{i+2}^\dagger a_i + a_i^\dagger a_{i+2} = \frac{1}{2}\left(X_i Z_{i+1} X_{i+2} + Y_i Z_{i+1} Y_{i+2}\right), \tag{5.23}$$

with $i = 0, 1$. The double electron operator instead generates 8 Pauli strings,

$$a_3^\dagger a_2^\dagger a_1 a_0 + a_0^\dagger a_1^\dagger a_3 a_2 = -\frac{1}{8}\big(X_3X_2X_1X_0 + X_3Y_2Y_1X_0 - Y_3Y_2X_1X_0 + Y_3X_2Y_1X_0 \\ X_3Y_2X_1Y_0 - X_3X_2Y_1Y_0 + Y_3X_2X_1Y_0 + Y_3Y_2Y_1Y_0\big). \tag{5.24}$$

The systematic way to decompose the $a_3^\dagger a_2^\dagger a_1 a_0$ is as follows,

$$a_3^\dagger a_2^\dagger a_1 a_0 = \sigma_3^- Z_2 Z_1 Z_0 \ \sigma_2^- Z_1 Z_0 \ \sigma_1^+ Z_0 \ \sigma_0^+ \tag{5.25}$$
$$= \sigma_3^- \otimes Z_2 \sigma_2^- \otimes Z_1 Z_1 \sigma_1^+ \otimes Z_0 Z_0 Z_0 \sigma_0^+ \tag{5.26}$$
$$= \sigma_3^- \otimes Z_2 \sigma_2^- \otimes \sigma_1^+ \otimes Z_0 \sigma_0^+ = \sigma_3^- \otimes (-\sigma_2^-) \otimes \sigma_1^+ \otimes \sigma_0^+. \tag{5.27}$$

At this point one case safely apply the definition of $\sigma_p^\pm$ and obtain the combination of Pauli strings, with the correct overall sign, see Fig. 5.3.

5.2 Bosonic hamiltonians

Interestingly, simulating bosons on a quantum computer is not much easier than fermions. Notice that a spin-1/2 object is not a boson, since it can exist in only two states, up or down in the compuational basis, while a bosonic degrees of freedom can be infinitely excited. Namely, the occupation number of bosonic mode can be arbitrary, or equivalently, a lattice site can host infinite bosons[8]

Therefore, we need to *truncate* the Hilbert space of a single boson, to a finite d-level system to perform the calculation. In this section we are not going to discuss in details all possible multi-particle bosonic operators, and we focus only on the building blocks, the creation and destruction operator.

The computational cost to perform these basic operations strongly depends on the encoding used, so we will first encounter an instance of the *memory-time* tradeoff dilemma, which is ubiquitous in quantum software development.

5.2.1 Unary, one-hot encoding

Let's consider the occupation number basis, and **just one bosonic mode**. The first way to encode such a state, $|s\rangle$ with $s = 0, 1, \ldots, d-1$, is by using a seemingly inefficient mapping, the so-called *unary* or one-hot encoding. This mapping requires d qubit per bosonic mode, and is defined as

$$|s\rangle = \otimes_{j=0}^{s-1} |0\rangle_j \, |1\rangle_s \otimes_{j=s+1}^{d-1} |0\rangle_j \,, \tag{5.28}$$

where basically to label the state $|0\rangle$ we use a string of qubits with only the first one set to '1', $|0\rangle \to |100\ldots00\rangle$, $|1\rangle \to |010\ldots00\rangle$, and so on, up to $|d\rangle \to |000\ldots01\rangle$.

The creation and destructions operators, in the occupation number basis[9] is defined as

$$b^\dagger |s\rangle = \sqrt{s+1}\, |s+1\rangle \,, \tag{5.29}$$
$$b \ |s\rangle = \sqrt{s}\, |s-1\rangle \tag{5.30}$$

[8] a spin-1/2 can be seen as an hardcore-boson, which occupation number can be 0 or 1.

[9] here we consider only one bosonic mode, so we drop the "site" index, i.e. $b_j^\dagger$.

so in this encoding it translates to

$$b^\dagger = b^\dagger_{\text{unary}} = \sum_{s=0}^{d-2} \sqrt{s+1}\big(\,|0\rangle\langle 1|\,\big)_s \otimes \big(\,|1\rangle\langle 0|\,\big)_{s+1}. \tag{5.31}$$

This operator, in qubit space, simply swaps the '0' and '1' values between the qubit at position s and $s+1$. This can be efficienly performed using $\mathcal{O}(d)$ Pauli operators, taking into account the following equalities, that maps projectors into Paulis

$$\begin{aligned} |0\rangle\langle 0| &= \frac{1}{2}(I+Z), \\ |1\rangle\langle 1| &= \frac{1}{2}(I-Z), \\ |1\rangle\langle 0| &= \frac{1}{2}(X-iY), \\ |0\rangle\langle 1| &= \frac{1}{2}(X+iY). \end{aligned} \tag{5.32}$$

For instance, the transition from a single configuration basis state $|s\rangle$ to $|s+1\rangle$ requires only to the action of σ^- on qubit s and σ^+ on qubit $s+1$, irrespective of the total register size d. The annihilation operator can be obtained by taking the Hermitian conjugate of $b^\dagger_{\text{unary}}$.

A notable operator in bosonic hamiltonians is the *position* operator, which in this encoding simply reads

$$(b^\dagger + b) = \frac{1}{2}\sum_{s=0}^{d-2} \sqrt{s+1}\; X_s X_{s+1} + Y_s Y_{s+1}. \tag{5.33}$$

The sum can be divided into two terms, s-even and $s-$odd. All terms within each block commute for the same reason explained in the above section. Each unit $XX+YY$ can be compiled as shown in Fig. 5.2(b), with $p=s$ and $q=s+1$, i.e without the ladder of CNOTS.

5.2.2 Binary, compressed encoding

As an alternative to the direct mapping, we can use a *binary mapping*, using $k = \lfloor \log d \rfloor$ qubits,

$$|s\rangle = |i_{k-1}\rangle\,|i_{k-2}\rangle \ldots |i_0\rangle\,, \tag{5.34}$$

with binary representation $s = i_{k-1}2^{k-1} + i_{k-2}2^{k-2} + \ldots i_0 2^0$. Again, this holds for just one bosonic mode. In this case the compilation of the creation/destruction operators is more cumbersome. Each multi-qubit projector in Eq. 5.29 needs to be expressed as a sum of tensor product of Paulis using Eq. 5.32. The support of a generic operation $|s+1\rangle\langle s|$ now scales with k, as in the worst case scenario the addition involve a global rearrangements of the bits.

We explicitely derive the mapping of a position operator to show how this is done in practice. Let's consider the case $d=4$, which means $k=2$ qubits:

$$b^\dagger + b = |01\rangle\langle 00| + |00\rangle\langle 01| + \sqrt{2}\big(\,|10\rangle\langle 01| + |01\rangle\langle 10|\,\big) + \sqrt{3}\big(\,|11\rangle\langle 10| + |10\rangle\langle 11|\,\big). \tag{5.35}$$

Now, let's only focus on the first two terms

$$|01\rangle\langle 00| + |00\rangle\langle 01| = \tag{5.36}$$
$$\big(|0\rangle\langle 0|\big) \otimes \big(|1\rangle\langle 0|\big) + \big(|0\rangle\langle 0|\big) \otimes \big(|0\rangle\langle 1|\big) = \tag{5.37}$$
$$\frac{1}{4}\big(I + Z\big) \otimes \big(X - iY\big) + \frac{1}{4}\big(I + Z\big) \otimes \big(X + iY\big) = \tag{5.38}$$
$$\frac{1}{4}\big(I \otimes X + Z \otimes X - iZ \otimes Y - iI \otimes Y + I \otimes X + Z \otimes X + iZ \otimes Y + iI \otimes Y\big) = \tag{5.39}$$
$$\frac{1}{2}\big(I \otimes X + Z \otimes X\big) := \frac{1}{2}\big(IX + ZX\big). \tag{5.40}$$

Notice that this Pauli decomposition is specific to the $|01\rangle\langle 00| + |00\rangle\langle 01|$ operator, and other terms need to be compiled separately.

5.3 First-quantized hamiltonians

In Section 5.1 we introduced fermionic hamiltonians in their (standard) second-quantization formalism. We see that, second quantized hamiltonian imply an efficient encoding in terms of occupation number states. However, physics and chemistry problems can be simulated beyond this formalism, i.e. directly in their real-space representation.

Concerning molecular systems there are several advantages of the real-space approach: *1.* while second-quantized simulation assumes the Born-Oppenheimer approximation with electronic orbitals chosen for fixed nuclear positions, first quantized hamiltonians treat electrons and ions at the same footing allowing for direct non-adiabatic simulations of chemical reaction. *2.* In addition, real-space simulations are basis-set free thus allowing a more systematic extrapolation toward the exact result. *3.* Real-space simulations incorporate the principle of physical locality. One way to see this is that, while the real-space Coulomb interaction is a *two* index electron-electron interaction, the corresponding second-quantized term is a *four* body operator. As we saw, simulating the real-time dynamics of a fermionic chemistry hamiltonians using M orbitals, with $M \propto N$, comes with a cost $\mathcal{O}(M^5)$, because there are M^4 terms to evolve, and each of them requires $\mathcal{O}(M)$ gates. On the other hand, first-quantized hamiltonians features N^2 terms, where N is the number of electrons. Morevover, first-quantized operators do not require anti-symmetrization, so one does not need a Jordan-wigner trasformation. Therefore, hamiltonian simulations of fermionic systems in first quantization can be asymptotically faster than the standard second-quantized form.

The drawbacks, in case of fermion are that, (1) the wavefunction must be antisymmetrized in the real-space basis, (2) the number of qubits to represent the position of the electrons with a reasonable space-discretization error is challenging even for H_2, and (3) compiling the Coulomb interactions $1/r$ into gates requires costly quantum arithmetic operations.

However, it is instructive to see at least one simple example of enconding of a first-quantized hamiltonian in a qubit register. In this Section we will put forward the simplest case of a single-particle evolution in a simple potential $V(x)$.

5.3.1 Wave-packet propagation in one dimension

Let us consider a quantum particle in one dimension. The evolution is given by a Schrödinger equation

$$i\frac{d}{dt}\psi(x,t) = H\psi(x,t), \tag{5.41}$$

where the Hamiltonian H is given by

$$H = K + V(x) = -\frac{1}{2m}\frac{d^2}{dx^2} + V(x)\,. \tag{5.42}$$

The kinetic term $K = -(1/2m)\,d^2/dx^2$ governs the free motion of the particle, while $V(x)$ is a one-dimensional potential.

The first step enabling the encoding is to discretize the continuous variables x. If the motion essentially takes place inside a finite region, say $-L \leq x \leq L$, we decompose this region into 2^n intervals of length $\Delta = 2L/2^n$, using a n-qubit quantum register. Each discrete position x_i:

$$x_i \equiv -L + \left(i + \tfrac{1}{2}\right)\Delta, \tag{5.43}$$

is mapped to an integer number i, that can be represented using the usual binary encoding: $|i\rangle = |i_{n-1}\rangle|i_{n-2}\rangle\ldots|i_0\rangle$ as a state of the computational basis of the n-qubit quantum register.

Hence, the wave function $\psi(x,t)$ is defined on the register as by

$$|\psi\rangle = \sum_{i=0}^{2^n-1} c_i(t)\,|i\rangle = \frac{1}{\mathcal{N}}\sum_{i=0}^{2^n-1}\psi(x_i,t)\,|i\rangle\,, \tag{5.44}$$

where is a factor that ensures correct normalization of the wave function[10] We can forget about this factor, and just take into account its existence in postprocessing.

The Hamiltonian operator would feature an exponentially scaling number of Pauli strings. So we need an alternative way to perform the blocks e^{iKt} and e^{iVt}, in a Trotter scheme, since V and K do not commute. Let's start from the potential operator, which is diagonal in the computational basis. Given a state $|i\rangle$,

$$e^{iVt}\,|i\rangle = e^{iV(x_i)t}\,|i\rangle\,. \tag{5.45}$$

In a general case, where $V(x_i)$ is simply a mapping from $i \to V_i$, one would need 2^n multi-controlled phase rotations $|i\rangle\langle i|\,e^{iV_it}$ to assign the correct phase to each component. However, if $V(x_i)$ is a polynomial function, the operation $e^{iV(x_i)t}$ requires only a polynomial number (in n) of gates. For instance, $V(x) = \alpha x^2$ requires $\mathcal{O}(n^2)$ controlled rotations, as explained in Ref. (3).

The unitary evolution induced by the kinetic operator can be performed using the same circuit of the $e^{i\alpha x^2}$ operator, and a change of basis from the position to the momentum

[10] basically there is the element of measure $\sqrt{\Delta}$ that connects the two normalizations.

space. We call p the momentum variable conjugate to x, that is, $-i(d/dx) = \mathsf{QFT}^{-1} p \mathsf{QFT}$, where QFT is the Fourier transform. Therefore,

$$e^{-iKt} = \mathsf{QFT}^{-1}\, e^{-i\left(\frac{p^2}{2m}\right)t}\, \mathsf{QFT}\,. \tag{5.46}$$

In this expression, we pass, by means of the Fourier transform QFT, from the x-representation to the p-representation, in which this operator is diagonal. The quantum Fourier transform maps a generic n-qubit state $\sum_{k=0}^{N-1} f(k)|k\rangle$ into $\sum_{l=0}^{N-1} \tilde{f}(l)|l\rangle$, where $N = 2^n$ and the vector $\{\tilde{f}(0), ..., \tilde{f}(N-1)\}$ is the discrete Fourier transform of the vector $\{f(0), ..., f(N-1)\}$, that is,

$$\tilde{f}(l) = \frac{1}{\sqrt{N}} \sum_{k=0}^{N-1} e^{2\pi i k l/N} f(k). \tag{5.47}$$

It can be shown that this transformation can be efficiently implemented in $O((\log_2 N)^2)$ quantum gates, while the best known classical algorithm, the fast Fourier transform, requires $O(N \log_2 N)$ elementary operations.(4)

Bibliography

[1] P. Gokhale, O. Angiuli, Y. Ding, K. Gui, T. Tomesh, M. Suchara, M. Martonosi, and F. T. Chong, "Minimizing state preparations in variational quantum eigensolver by partitioning into commuting families," *arXiv preprint arXiv:1907.13623*, 2019.

[2] J. D. Whitfield, J. Biamonte, and A. Aspuru-Guzik, "Simulation of electronic structure hamiltonians using quantum computers," *arXiv preprint arXiv:1001.3855*, 2010.

[3] G. Benenti and G. Strini, "Quantum simulation of the single-particle schrödinger equation," *American Journal of Physics*, vol. 76, no. 7, pp. 657–662, 2008.

[4] M. A. Nielsen and I. L. Chuang, *Quantum Computation and Quantum Information: 10th Anniversary Edition.* Cambridge University Press, 2010.

Chapter 6

Variational algorithms

Variational algorithms form the backbone of computational physics. When considering chemistry or many-body quantum problems, a variational description almost always provides a satisfactory understanding of the problem, which can then be refined using projection methods.

In this chapter, we will attempt to treat variational algorithms in the most general manner possible. Although deeply rooted in chemical and physical applications, this method also finds its place in quantum machine learning. In practice, quantum neural networks are nothing but glorified variational circuits, where, instead of optimizing an energy, we optimize a loss function.

Every quantum variational algorithm conceptually consists of two parts: the first part involves the existence of a variational ansatz, determined by the choice of the circuit and where the variational parameters enter. The second part is the optimization procedure for these variational parameters, aiming to minimize a target cost function. The optimization is managed through a classical feedback loop. For this reason, such algorithms are often referred to as hybrid quantum-classical.

In conventional many-body physics and chemistry, there are numerous variational states. For example, the BCS wavefunction used in superconductivity, the Jastrow wavefunction for liquid helium, or the configuration interaction method in quantum chemistry. In some cases, the variational parameters within the ansatz can be optimized analytically, but in the most general cases, they need to be optimized numerically (as is the case for quantum variational algorithms).

6.1 Variational quantum eigensolver

Variational quantum computation features parametrized circuits that produce a trial state $|\psi(\boldsymbol{\theta})\rangle$. Its N_p parameters, $\boldsymbol{\theta} = (\theta_1, \cdots, \theta_{N_p})$, are adjusted at every step following an iterative classical procedure. Usually the parameters $\boldsymbol{\theta}$ enters in the circuit as rotation angles, this is evident in the case of hardware efficient circuits, but it is also true for hamiltonian inspired circuits (cfn. Sect. 5.1.3). Different hardware architectures come with different sets of native gates, so in this chapter we try to maintain an high-level description of the algorithm. This algorithm usually takes the name of variational quantum eigensolver (VQE)(1; 2). The goal

is to minimize a cost function $C_{\boldsymbol{\theta}} = \langle \psi_{\boldsymbol{\theta}} | \hat{O} | \psi_{\boldsymbol{\theta}} \rangle$, where $\hat{O}$ is an operator that describes the problem we are interested. For chemical systems, $\hat{O}$ is the full Hamiltonian of the problem (qubit operator), after that a suitable physics-to-qubit mapping has been performed (see Ch. 5. In this case, at the end of a successful optimization, we have the optimized parameters $\boldsymbol{\theta}^*$, such that $|\psi(\boldsymbol{\theta}^*)\rangle$ should be a close approximation of the ground stae of the problem, provided that the variational ansatz is able to reach the ground state. Formally

$$\boldsymbol{\theta}^* = \arg\min_{\boldsymbol{\theta}} C_{\boldsymbol{\theta}}. \tag{6.1}$$

It is important to notice that we already showed a method to calculate energy using real-time dynamics and QPE in Sec. 4.5. However, that approach requires the possibility to implement arbitrarily long Hamiltonian simulation circuits, thus it can only be implemented in the fault-tolerant regime. Variational methods are, in principle, amenable to NISQ implementation because the circuit should be much shorter. Moreover, the QPE-based method requires, as a starting point, a good quantum state, i.e., one with a large overlap with the ground state. Variational methods could provide such a starting point.

Considerations for Quantum Advantage: It's important to state from the beginning that these algorithms do not have a proven quantum advantage, unlike Hamiltonian simulation. When considering physics or chemistry, the idea that a wave function can represent the ground state of a Hamiltonian better than any possible classical ansatz is an educated guess. But there is no a priori proof that an efficient circuit always exists to create this state or that optimization can lead us to it. This is also true for classical variational algorithms, such as variational quantum Monte Carlo. Only in hindsight can we verify whether the obtained energy (with a certain zero point fixed) is better or not.

Despite this necessary disclaimer, variational algorithms find such a wide range of applications that it is necessary to discuss them in these notes.

6.1.1 Circuit trial states

Strictly speaking, what is parameterized is not the state but the circuit, specifically the unitary operator $U_{\boldsymbol{\theta}}$. This requires establishing a convention regarding the initial state to which $U_{\boldsymbol{\theta}}$ is applied. Very often, this state is simply the zero state, but there are exceptions such as in QAOA. In chemistry, some trial ansatz start from the Hartree-Fock state, which is easy to prepare from the zero state. It simply involves applying a suitable number of X gates to create the bit string with the correct positions of 1's (remember that the 1s denote the occupation of the molecular orbital assigned to the given qubit, see Sect 5.1)

It is also important to note that any variational computation worthy of its name has a number of variational parameters that is smaller than the Hilbert space dimension. Unfortunately, in the literature, where small-scale examples are very popular, this condition is not always satisfied.

To be more concrete, we can define a couple of circuit ansatz that find application in chemistry, physics, and machine learning. Let's start with a heuristic ansatz, which has the advantage of being very compact but also has several drawbacks, as it lacks any structure that we can exploit to reduce the number of parameters or attribute them a physical meaning.

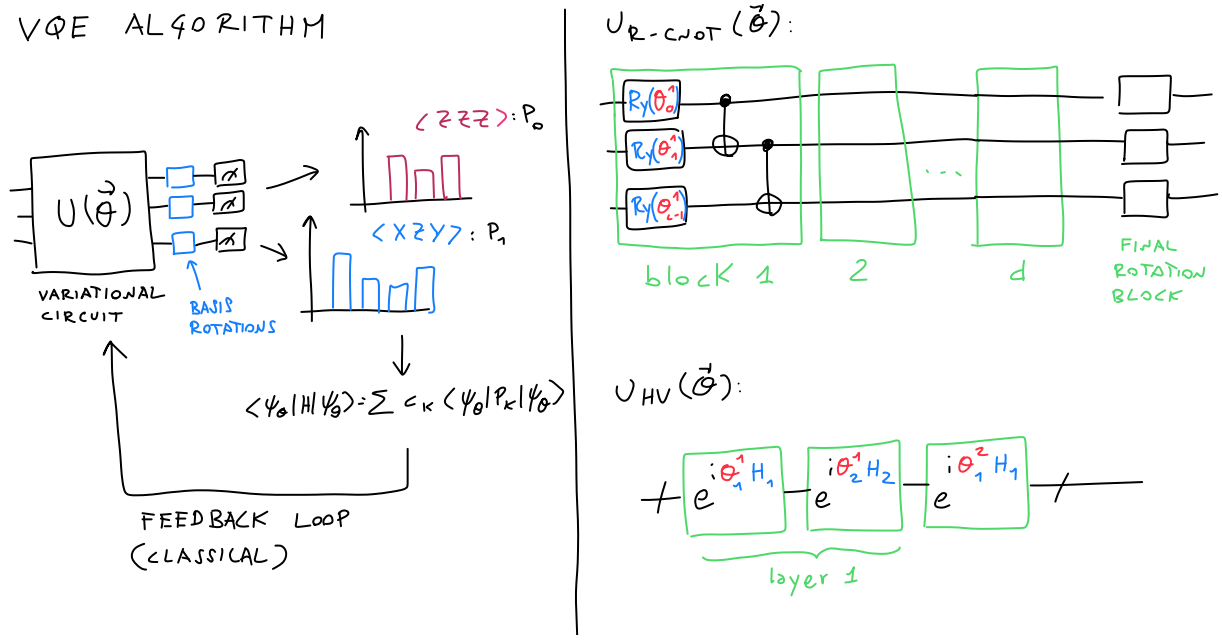

Figure 6.1: Left panel. The VQE algorithm features a parametrized circuit, which needs to be repeated many times (with appropriate post-rotations) to compute the expectation value of the energy (as a sum of expectation values of the Pauli strings). The parameters are optimized classically to lower the energy. Right panel. Two possible choices for the parametrized circuit. The heuristic R-CNOT and the hamiltonian variational.

As the capabilities of hardware improve, I predict and hope that this circuit will gradually be abandoned for chemistry. However, it may still find applications outside of VQE. For example, many quantum machine learning circuits are of this type.

Heuristic circuits. This type of circuit generally features entangling blocks made of a cascade of two-qubit gates, like the CNOT gates, and rotations blocks where the angles plays the role of parameters. The most commonly studied heuristic circuit is made of a series of d blocks built from single-qubit rotations $U_{\mathrm{R}}(\boldsymbol{\theta}^k)$, interlayered with an entangler block U_{ent}, that covers the whole qubit register (see Fig. 6.1) In our case, this block is made of a ladder of CNOTgates with linear connectivity, such that qubit q_i is target of qubit q_{i-1} and controls qubit q_{i+1}, with $i = 0, \cdots, L-1$, with open or closed boundary conditions, depending on the hardware topology[1] This choice is commonly used as it mirrors the current sparse qubit connectivity of today's hardware. The single-qubit rotations are all local operations, $U_{\mathrm{R}}(\boldsymbol{\theta}^k)$, so they can be written as a tensor product of single qubit rotations. A common choice for the rotation axis is Y, sicne this yields a real-amplitude ansatz, but diffent choices are possible. In this case, the ansatz is commonly labeled as R_Y-CNOTcircuits, and find applications in

[1] i.e. the qubit connectivity.

chemistry, optimization and machine learning. The rotation block is

$$U_{\mathrm{R}}(\boldsymbol{\theta}^k) = \bigotimes_{i=0}^{L-1} R_y(\vartheta^k_{q_i}), \tag{6.2}$$

where $R_y(\vartheta^k_{q_i})$ is a rotation on the y–axis on the Bloch sphere of qubit q_i, and $k = 1, \cdots, d+1$. Here, $\boldsymbol{\theta}^k$ denotes an array of L angles. The full unitary circuit operation is described by

$$U_{\text{R-CNOT}}(\boldsymbol{\theta}) = U_{\mathrm{R}}(\boldsymbol{\theta}^{d+1})\ \overbrace{U_{\text{ent}} U_{\mathrm{R}}(\boldsymbol{\theta}^d) \ldots U_{\text{ent}} U_{\mathrm{R}}(\boldsymbol{\theta}^1)}^{d\text{-times}}, \tag{6.3}$$

and the final parametrized state is

$$|\psi(\boldsymbol{\theta})\rangle = U_{\text{R-CNOT}}(\boldsymbol{\theta}) \left(|0\rangle^{\otimes L} \right). \tag{6.4}$$

The total number of variational parameter is $L(d+1)$.

Hamiltonian variational An alternative is to use physically motivated ansatzes, such as the Hamiltonian variational (HV) ansatz (3). This ansatz is one of the most powerful for simulations of physical hamiltonians, which can be written generally as sum of non-commuting operators

$$H = \sum_{\alpha=1}^{\ell} H_\alpha \tag{6.5}$$

The unitary operator defining the HV ansatz is again made of d blocks, but this time each block is a product more structured operators, i.e. of ℓ operators $U_\alpha = \exp(\mathrm{i}\theta^k_\alpha H_\alpha)$, with $\alpha = 1, \ldots, \ell$ indexing the non-commuting terms of the Hamiltonian. Suppose we want to find the ground state of a transverse field Ising model

$$H = \sum_i^L Z_i Z_{i+1} + \sum_i^L X_i, \tag{6.6}$$

then we only need $\ell = 2$, and the full unitary operator[2] is

$$U_{\mathrm{HV}}(\theta) := \prod_{i=d}^{1} U_2(\theta^i_2) U_1(\theta^i_1), \tag{6.7}$$

which can be efficiently decomposed using one- and two-qubit quantum gates, as shown in Sec. 4.3, and the final parameterized state is

$$|\psi(\theta)\rangle = U_{\mathrm{HV}}(\theta) \left(\frac{|0\rangle + |1\rangle}{\sqrt{2}} \right)^{\otimes L}, \tag{6.8}$$

[2]the unconventional order of index i is just a trick to respect the from-right-to-left order of application of operators to a quantum state. The rightmost U is applied first.

where the initial non-entangled state can be obtained from $|0\rangle^{\otimes L}$ by placing one Hadamard gate on each qubit. The total number of parameters is ℓd.

Some considerations that may be obvious but are worth stressing: The heuristic circuit does not feature the hamiltonian operators, so it is totally not guaranteed to succeed in finding a good approximation of the ground state. Its only merit is that it can be run with short depth and therefore is feasible for early and today's hardware experiment. It also feature *a lot* of parameters, and no easy way to initialize them. This means that optimization, which is a classical loop, becomes impractical for large sizes. As the hardware becomes better, I expect that heuristic circuits will be abandoned in favour of more structured ones, such the HV.

From the point of view of circuit's compilation, the HV ansatz features by construction the same building blocks of a hamiltonian simulation circuit, just using variable, optimizable time-steps. In case of fermionic hamiltonians, each block takes the circuit forms explained in Sect. 5.1.3. It is clear that the HV circuits features less parameters, thus allowing us for an easier optimization, but they can be quite long, preventing us from a NISQ implementation.

One possible justification of a HV circuit is that, in the $d \to \infty$ limit, it can approach a *trotterized* version of an adiabatic state preparation procedure (cfn. Ch 3). However, since the ansatz depth is finite, and there may be an exponentially closing gap during this "digitized annealing", also in this case we are not guaranteed to find the exact ground state.

Other physics inspired circuits. Another possible strategy is, instead of trotterizng the full Hamiltonian, is to use pieces of that, or other physics operators, to generate the circuit. One example is the popular *unitary coupled cluster* anzatz(4), which operator takes the form

$$U = e^{T - T^\dagger}, \tag{6.9}$$

where T is an excitation operator, that may contain several order of molecular orbitals excitation, for instance $T = T_1 + T_2$, where

$$T_1 = \sum_{i,n} t_{in} a_i^\dagger a_n, \qquad T_2 = \sum_{ij,nm} t_{ijnm} a_i^\dagger a_j^\dagger a_n a_m. \tag{6.10}$$

Here i, j label un-occupied orbitals, while n, m occupied ones, and the creation and destruction operators have been introduced in Ch. 5. Finally, t_{in} and t_{ijnm} are variational parameters. Notice that we already provided circuit decomposition of this kind of operators, which closely resemble Eqs 5.17 and 5.19, in Sect. 5.1.3. This time, there is a *minus* sign between the T_1 (or T_2) and its hermitean conjugate. This only means that, after the Jordan-Wigner transformation is applied, a different set of Pauli strings emerge from the cancellation. For instance, a generic operator of the form $e^{T_1 - T_1^\dagger}$, yields a Pauli operator of the form

$$\frac{it_{in}}{2} \left[X_i \big(Z_{i-1} \cdots Z_{n+1} \big) Y_n - Y_i \big(Z_{i-1} \cdots Z_{n+1} \big) X_n \right], \tag{6.11}$$

which features the Pauli strings that are absent in Ref. of Sect. 5.1.3. The variational parameters are, again, encoded in the rotation angles of the blocks depicted in Fig. 5.2. Overall,

the unitary coupled cluster circuit looks very similar to a fermionic hamiltonian evolution circuit, and therefore is considered also not feasible in the NISQ era, for large molecules.

6.1.2 Energy and gradient based optimization

VQE finds applications in a multitude of fields. In these notes, we will specifically address the very popular case in which the cost function to be optimized is an energy derived from a many-body or quantum chemistry Hamiltonian. In this case, the operator $\hat{O}$ in the introduction is $\hat{H}$. And the final wave function must be the ground state of the Hamiltonian.

At this point, the search for optimal parameters is delegated to a classical optimization loop. In the general case, this is an iterative process, so at each step of the classical optimizer, new parameters theta $\boldsymbol{\theta}' = \boldsymbol{\theta} + \delta\boldsymbol{\theta}$ are proposed, which are used to create a new circuit and thus a new trial state, and so on.

The first thing to consider is that the cost function surface can be arbitrarily rugged (this depends on the circuit) and therefore, even if the exact ground state is contained within the variational ansatz, we may not find it due to optimization being trapped in local minima.

The simplest thing to use as optimizer are energy-based methods. For instance, those routinely available in SciPy like COBYLA or BFGS. These mimimizers needs to perform repeated calls to the function $C_{\boldsymbol{\theta}}$ and compute one or a set of energy differences

$$\Delta = C_{\boldsymbol{\theta}} - C_{\boldsymbol{\theta}'}, \tag{6.12}$$

where $\boldsymbol{\theta}'$ is a proposed change of the variational parameters' array.

Another possibility, which should be preferred is the usage of gradients, in this case the parameters' *psudo-dynamics* reads

$$\boldsymbol{\theta}' = \boldsymbol{\theta}' + \eta \boldsymbol{f}_{\boldsymbol{\theta}}, \tag{6.13}$$

where the generalized force is $f_{\theta_i} = -\frac{\partial C_{\boldsymbol{\theta}}}{\partial \theta_i}$, for each θ_i component $i = 1, \cdots, N_p$, and η is a tunable time-step or, adopting fancier ML jargon, the learning rate. In many numerical methods, the gradient can be calculated using finite differences, i.e. from the energy difference calculated at two short distance points

$$f^{FD}_{\theta_i} = -\frac{C(\theta_i + \delta) - C(\theta_i)}{\delta}, \tag{6.14}$$

where $\delta \to 0$. This is not the case for quantum computing, as each energy evaluation comes with a measurement noise (see Sect. 2.4).

For the rest of the Chapter, we assume that the cost function is actually the *energy* of the system

$$E_\theta = \langle \psi_\theta | H | \psi_\theta \rangle \tag{6.15}$$

6.1.3 Parameter shift rule

In some cases, the finite difference formula becomes exact, for specific and large values of δ. In this notes, we will derive the formula for the simplest case in which the variational parameters are appearing in a single qubit rotation gate.

For simplicity, let us consider that we have only one parametrized gate,

$$U(\theta) = e^{-i\theta P}, \tag{6.16}$$

where P is a Pauli matrix. Here we omit the factor 1/2 in the definition of the angle, as to match the standard rotation gate definition. In this case we have that $\partial_\theta U(\theta) = -iPe^{-i\theta P} = -iPU(\theta)$. Suppose that the parametrized states is $|\psi_\theta\rangle = U(\theta)|\psi\rangle$, namely, we want to differentiate with respect to the variational parameter appearing in the *last* unitary operator U, of a possibly long chain, i.e $|\psi\rangle = U'(\theta')U''(\theta'')\cdots|0\rangle$. This is assumed here to simplify the notation, but it is not a limiting factor.

Then, the derivative of the energy with respect to θ is

$$\partial_\theta E = \partial_\theta \langle\psi|U^\dagger(\theta)| H |U|\psi\rangle = \langle\psi| \partial_\theta U^\dagger H U |\psi\rangle + \langle\psi| U^\dagger H \partial_\theta U |\psi\rangle, \tag{6.17}$$

where we drop the dependency on θ of U. Using Eq. 6.16, we have that

$$\partial_\theta E = i \langle\psi| U^\dagger (PH - HP) U |\psi\rangle, \tag{6.18}$$

where we used the fact that P commutes with U, and the minus plus sign comes from the derivative of $U^\dagger$.

Now comes the first trick. Eq. 6.18 can be rewritten as

$$\partial_\theta E = \frac{1}{2}\big(\langle\psi| U^\dagger (I - iP)^\dagger H (I - iP) U |\psi\rangle - \langle\psi| U^\dagger (I + iP)^\dagger H (I + iP) U |\psi\rangle \big). \tag{6.19}$$

This form is useful because this other equality holds

$$U\left(\frac{\theta}{4}\right) = \frac{1}{\sqrt{2}}(I - iP), \tag{6.20}$$

because $P^2 = I$, i.e. P has two eigenvalues ± 1. [3]. This also means that $\frac{1}{\sqrt{2}}(I - iP)^\dagger = \frac{1}{\sqrt{2}}(I + iP^\dagger) = \frac{1}{\sqrt{2}}(1 + iP) = U^\dagger(\pi/4) = U(-\pi/4)$.

Eq. 6.19 then can be written as

$$\partial_\theta E = \langle\psi| U^\dagger U^\dagger(\pi/4) H U(\pi/4) U |\psi\rangle - \langle\psi| U^\dagger U^\dagger(-\pi/4) H U(-\pi/4) U |\psi\rangle. \tag{6.21}$$

We basically applied an additional rotation of $\pm\pi/4$ to the parametrized operator, since $U(\pi/4)U(\theta) = U(\theta + \pi/4)$.

Therefore

$$\partial_\theta E = \langle\psi| U^\dagger(\theta + \pi/4) H U(\theta + \pi/4) |\psi\rangle - \langle\psi| U^\dagger(\theta - \pi/4) H U(\theta - \pi/4) |\psi\rangle \tag{6.22}$$

$$= E(\theta + \pi/4) - E(\theta - \pi/4). \tag{6.23}$$

One can re-do the calculation for the case in which the parametrized gate is a properly defined rotation gate, i.e. with the factor $\theta/2$. In this case, the parameter shift rule formula is:

$$\partial_\theta E = \frac{1}{2}\left(E(\theta + \pi/2) - E(\theta - \pi/2)\right). \tag{6.24}$$

So, one needs to compute the energy at two angle values, shifted by $\pm\pi/2$ to obtain the exact derivative at point θ.

[3] The general case where the eigenvalues of P are $\pm\lambda$ is $U(\frac{\theta}{4\lambda}) = \frac{1}{\sqrt{2}}(I - i/\lambda P)$

6.1.4 The measurements problem

Up to this point, everything seems simple and straightforward. Unfortunately, a crucial point we haven't touched upon is how to measure the energy itself. This point allows us to close the loop on all the information provided in previous chapters 2 and 5. The first step is to express H as a sum of Pauli terms, and the second step is to measure each term individually. Finally, we understand again the usefulness of Sect. 2.4.2.

Let's consider a fermionic many-body Hamiltonian (but it could also be a spin or bosonic), common in quantum chemistry. As we saw in Ch. 5 the hamiltonian takes the general form of linear combination of products of single-qubit Pauli operators

$$H = \sum_{j=1}^{N_P} h_j P_j \tag{6.25}$$

where h_j is a real scalar coefficient, and N_P is of order $\mathcal{O}(n^4)$ since there are n^4 terms to transform in Eq. 5.1. Each term P_j in the Hamiltonian is typically referred to as a *Pauli string*, and is a tensor product $P_j = \bigotimes_{i=1}^{n} \sigma_i^\alpha$ of n Pauli matrices $\sigma^\alpha \in \{I, Z, X, Y\}$. What is important for our discussion is that the coefficient h_p can take very large values (in modulus). They are determined by the Jordan-Wigner (or similar) transformation, starting from the "physical" parameters h_{pk}, h_{pqrs} in Eq. 5.1. Just to give an idea, $\sum_j |h_j|$ is of the order of 40 Ha, already for a moderate example of a H_2O molecule described in STO-6G basis(3).

Let us suppose to have prepared a variational quantum state $|\psi\rangle$: following Eq. 5.13, we see that the mean value of the Hamiltonian is the linear combination of the expectation values of the N_p Pauli strings,

$$\langle\psi| H |\psi\rangle := \langle H\rangle = \sum_{j=1}^{N_P} h_j \langle P_j\rangle. \tag{6.26}$$

For simplicity we assume that the expectation values of the P_j's are obtained from N_P independent sets of measurements: the error on the estimate is then given by

$$\epsilon = \sqrt{\sum_j |h_j|^2 \mathrm{Var}[P_j]/M_j}, \tag{6.27}$$

where $\mathrm{Var}[P_j] = \langle P_j^2\rangle - \langle P_j\rangle^2 \leq 1$ is evaluated using M_j repeated measurements, or *shots*. For the example of Sect. 5.1.4 this procedure entails the preparation of 12 different circuits, each of them containing the necessary postrotations to measure a given Pauli string expectation value. For instance, to measure $\langle\psi| X_3X_2X_1X_0 |\psi\rangle$, we would need to append four Hadamard gates to the circuits that prepares $|\psi\rangle$. Each of these circuits needs to be repeated M_j times to gather sufficent statistics to compute the expectation value.

Since we need to evaluate each $\langle P_j\rangle$ independently, their statistical fluctuations are not correlated, so one needs to reach chemical accuracy by resolving each expectation value with very high accuracy as it gets multiplied by a possibly very large prefactor h_j. In Wecker et. al.(3), it is estimated that $M = \sum_j M_j = 10^9$ measurements would be needed to reach $\epsilon \sim 10^{-3}$ Ha, for H_2O, and up to 10^{13} for Fe_2S_2 decribed with 112 spin-orbitals and STO-3G basis.

There is the possibility that some of the Pauli strings commute with some others. These can be evaluated using the same post-rotation setting. For intance, for the Ising models, all the terms such as XIII, IXII, and so on, commute and can be measured in just one basis. However, this reduces only marginally the number of different circuits to be run. All in all, this *measurement problem* is one of the major drawback of VQE, keeping also in mind that it is not related to hardware noise, which conceptually could be eliminated instead.

Further details and comparison with how classical variational methods work can be found in Ref. (5).

6.2 QAOA

Variational algorithms also find application in cases where the cost function is not the expected value of a many-body Hamiltonian. Here, for completeness, we present a fairly well-known variational algorithm for optimizing classical cost functions.

In principle, one could use any variational circuit. However, why should there be an advantage if the solution to a classical problem is a single bit-string, and not a superposition of many (as is the case for a genuine ground-state many-body system)? Quantum computing cannot offer, unlike quantum chemistry, an advantage in storing the solution, but perhaps an advantage in finding it.

These arguments seem even more heuristic than the previous case, and indeed they are. However, there is a type of circuit that might work, based on the physical intuition behind it. This algorithm is called the Quantum Approximate Optimization Algorithm (QAOA)[4]. (6)

The optimization problems we can solve are Ising models such as the ones presented in Chapter 3, defined over L variables $(\sigma_1, \ldots, \sigma_L) = \boldsymbol{\sigma}$ with $\sigma_j = \pm 1$. The energy of a spin configuration $\boldsymbol{\sigma}$ reads:

$$E(\boldsymbol{\sigma}) = -\sum_{i,j=1}^{L} J_{i,j}\sigma_i\sigma_j - \sum_{j=1}^{L} h_j\sigma_j. \tag{6.28}$$

Representing a generic spin configuration $\boldsymbol{\sigma} \in \{1, -1\}^L$ as a binary string $\boldsymbol{x} \in \{0, 1\}^L$, and writing the energy as $E(\boldsymbol{\sigma}) \to f(\boldsymbol{x})$, we write the problem Hamiltonian $\hat{H}_{\mathrm{P}}$ as a diagonal operator

$$\hat{H}_{\mathrm{P}} = \sum_{x} f(x)|x\rangle\langle x|, \tag{6.29}$$

defined by its diagonal matrix elements $f : \{0, 1\}^L \to \mathbb{R}$. The classical spin variables σ_j are promoted to single-qubit Pauli operators $\hat{\sigma}_j^z$.

QAOA can be understood as a digitized version of quantum annealing (cfn. Ch. 3) that requires variational optimization of circuit parameters. These parameters can be seen as the optimizable time steps that control the evolution of the state under the action of the *problem* and the *mixing* operators, interleaved like in the Trotter algorithm (cfn. Ch. 4). Notice that, here we don't need to realize any continuous time real-time dynamics: the variational parameters can be arbitrary, and one can also utilize shallow circuits.

[4]note that the word 'algorithm' is already contained in the acronym, so it's incorrect to write QAOA algorithm, although this might slip through in the text or in speech

To be precise, the unitary operator defining the ansatz is made of d blocks, each of them being the product of two unitary operators $\hat{U}_{\mathrm{P}} = \exp\left(i\theta_{\mathrm{P}}^{l}\hat{H}_{\mathrm{P}}\right)$, and $\hat{U}_{\mathrm{M}} = \exp\left(i\theta_{\mathrm{M}}^{l}\hat{H}_{\mathrm{M}}\right)$, with $l = 1, \ldots, d$ and where $\hat{H}_{\mathrm{P}}$ is the problem Hamiltonian, and

$$\hat{H}_{\mathrm{M}} = \sum_{j=1}^{L} \hat{\sigma}_j^x \tag{6.30}$$

is the non-diagonal *mixing* operator.

The implementation of these unitary operators involves efficient single-qubit rotations along the x-axis, denoted as $R_x(\theta) = \exp\left(i\theta\hat{\sigma}^x/2\right)$, and two-qubit parametrized gates, $R_{zz}(\theta) = \exp\left(i\theta\hat{\sigma}^z \otimes \hat{\sigma}^z/2\right)$. The structure of the QAOA ansatz implies that all the local $\hat{\sigma}^z \otimes \hat{\sigma}^z$ interactions within the same block are 'evolved' with the same time step θ_P^l, while all the x-rotations within the block are parametrized by the same angle θ_M^l (see Fig. **??**). The total number of parameters is $n_{\mathrm{par}} = 2d$, i. e., is independent of the problem size L, and the full unitary operator reads

$$U_{\mathrm{QAOA}}(\boldsymbol{\theta}) = \overbrace{\hat{U}_{\mathrm{M}}(\theta_M^d)\hat{U}_{\mathrm{P}}(\theta_P^d)\ldots\hat{U}_{\mathrm{M}}(\theta_M^1)\hat{U}_{\mathrm{P}}(\theta_P^1)}^{d\text{-times}}. \tag{6.31}$$

The final parametrized state is

$$|\psi(\boldsymbol{\theta})\rangle = U_{\mathrm{QAOA}}(\boldsymbol{\theta}) \left(\frac{|0\rangle + |1\rangle}{\sqrt{2}}\right)^{\otimes L}, \tag{6.32}$$

where the initial non-entangled state can be obtained from the state $|0\rangle^{\otimes L}$ by acting with one Hadamard gate on each qubit.

The expectation value of $\hat{H}_{\mathrm{P}}$ over the prepared state is given by the sum of all spin configurations

$$\tilde{C} = \langle\psi_{\boldsymbol{\theta}}|\hat{H}_{\mathrm{P}}|\psi_{\boldsymbol{\theta}}\rangle = \sum_{x=0}^{2^L-1} |\psi_{\boldsymbol{\theta}}(x)|^2 f(x). \tag{6.33}$$

Howver, as explained above, the full sum can be approximated using a finite sample of configurations

$$\tilde{C} \approx \frac{1}{M}\sum_{i=1}^{M} f(x_i), \tag{6.34}$$

where x_i are sampled from $|\psi_{\boldsymbol{\theta}}(x)|^2$. The precision of this estimate is affected by statistical noise induced by the finite number of quantum measurements M. This part is exactly the same as the VQE case, but with the nice property that only samples in the computational basis are needed. Indeed H_P is a purely diagonal Hamiltonian.

We see that the QAOA methods borrow concept from the variuos Chapters presented so far: adiabatic optimization, real-time dynamics, and variational methods.

Bibliography

[1] A. Peruzzo, J. McClean, P. Shadbolt, M.-H. Yung, X.-Q. Zhou, P. J. Love, A. Aspuru-Guzik, and J. L. O'Brien, "A variational eigenvalue solver on a photonic quantum processor," *Nature Communications*, vol. 5, Jul 2014.

[2] M. Cerezo, A. Arrasmith, R. Babbush, S. C. Benjamin, S. Endo, K. Fujii, J. R. McClean, K. Mitarai, X. Yuan, L. Cincio, *et al.*, "Variational quantum algorithms," *Nature Reviews Physics*, vol. 3, no. 9, pp. 625–644, 2021.

[3] D. Wecker, M. B. Hastings, and M. Troyer, "Progress towards practical quantum variational algorithms," *Phys. Rev. A*, vol. 92, p. 042303, Oct 2015.

[4] S. McArdle, S. Endo, A. Aspuru-Guzik, S. Benjamin, and X. Yuan, "Quantum computational chemistry," *arXiv preprint arXiv:1808.10402*, 2018.

[5] G. Mazzola, "Quantum computing for chemistry and physics applications from a monte carlo perspective," *arXiv preprint arXiv:2308.07964*, 2023.

[6] E. Farhi, J. Goldstone, and S. Gutmann, "A quantum approximate optimization algorithm," 2014.

Chapter 7

Algorithms for search and sampling

7.1 Amplitude amplification

Amplitude amplification (QAA) is a method that generalizes Grover algorithm (indeed it was not established at the time of Nielsen and Chuang's book) and find application as a subroutine in many quantum algorithms. In general, having a way to increase the probability to sample from a component $|G\rangle$ or a subspace of the Hilbert space may be very useful.

In this Section we will provide a minimal way to understand the method, while referring to Ref. (1) for the details. The conceptual framework introduced in this Chapter will be useful to mor eeasily interiorize the more advanced methods of Chapters 9.

First of all, let's recall the goal, that is increasing the probability to observe a *marked* component $|G\rangle$ of a quantum state: this finds immediate application in **searching** problems.

Suppose we have a list of $N = 2^n$ elements, and we are tasked to find one of them, labelled with integer G (clearly we don't know in advance where the element m is, but we assume that there is an operation that is able to determine that this number is the wanted one, as much as an operation of search over an array of randomly inserted integers). Classically, the runtime of the search would scale as $\mathcal{O}(2^n)$. We are going to prove that quantumly this can be done with a runtime of $\mathcal{O}(2^{n/2})$, i.e. achieving a quadratic speed-up.

Let's start from the definition of projectors and reflection operators. The projector onto the component $|i\rangle$, is given by

$$P_i = |i\rangle \langle i| \,, \tag{7.1}$$

while the operator *reflection* is given by

$$R_i = I - 2P_i = I - 2\,|i\rangle \langle i| \,. \tag{7.2}$$

With this convention, this operator, that can be proven to be unitary $R^\dagger R = I$ (and therefore implementable in a circuit), flips the sign of the *target* component. Notice that $-R_i$ would flip instead all the rest, maintaining the component of $|i\rangle$ unchanged. Therefore the operator R_i is (properly speaking)[1]a reflection about a plane perpendicular to $|i\rangle$. This will be useful for the geometric interpretation of the algorithm.

[1]this may sound like a dangerous mix of definitions, but at the end it just implies a minus sign, which is not important in practice.

Let's now adopt a common -yet simplified- notation, in this context, and rewrite a generic quantum state as

$$|\psi\rangle = g\,|G\rangle + b\,|B\rangle\,, \tag{7.3}$$

where $|G\rangle$ is a Good subspace, and $|B\rangle$ is the Bad subspace. The goal is to transfer amplitute from the bad to the good subspace. It can be shown that

$$R_G\,|\psi\rangle = (I - 2\,|G\rangle\,\langle G|) = g\,|G\rangle + b\,|B\rangle - 2g\,|G\rangle = -g\,|G\rangle + b\,|B\rangle\,. \tag{7.4}$$

The simplest example of a reflection operator is the Pauli gate Z. Keeping this notation, we can see that the projection on the Good subspace is $P_G\,|\psi\rangle = |\psi\rangle$ if $|\psi\rangle \in$ Good subspace and is $P_G\,|\psi\rangle = 0$ otherwise. The same holds for P_B.

We can see that $P_B = I - P_G$, such that they partition exactly the Hilbert space in two exclusive regions. Now, we can generally draw a bi-dimensional diagram and plot a generic state $|\psi\rangle$ using these coordinates (see Fig. 7.1.a). For instance, a uniform superposition state

$$H^{\otimes n}\,|\mathbf{0}\rangle = \sqrt{\frac{1}{2^n}}\sum_{i=0}^{2^n-1}|i\rangle\,, \tag{7.5}$$

where $|\mathbf{0}\rangle = |0\rangle_n$ is the n-bits zero basis state, will have a small $2^{-n/2}$ component on G, so it will be slightly non-parallel to the B axis in Fig. 7.1.a We can rewrite a general starting state as

$$|\psi\rangle = \sin\theta\,|G\rangle + \cos\theta\,|B\rangle\,. \tag{7.6}$$

At this stage, the probability of success $P_{\text{succ}} = \sin^2\theta$. Equivalently $\theta = \arcsin\sqrt{P_{\text{succ}}}$. Now we need to define (again) the following two reflections, about the (negative) Good subspace, and about the (negative) initial state itself, and the composite operator W:

$$R_G = I - 2\,|G\rangle\,\langle G| \tag{7.7}$$

$$R_\psi = I - 2\,|\psi\rangle\,\langle\psi| \tag{7.8}$$

$$W = -R_\psi R_G \tag{7.9}$$

The first reflection, Eq. 7.4, R_G will flip the component of the Good subspace. The second ($-R_\psi$) operator flips the component orthogonal to $|\psi\rangle$, i.e. is a proper reflection about $|\psi\rangle$. Overall, the application of W on the initial state simply rotates by 2θ the state "toward" the Good subspace (see Fig. 7.1). The new state reads is $W\,|\psi\rangle = \sin 3\theta\,|G\rangle + \cos 3\theta\,|B\rangle$, and it is possible to show that k repeated applications of W yield

$$W^k\,|\psi\rangle = \sin\left[(2k+1)\theta\right]\;|G\rangle + \cos\left[(2k+1)\theta\right]\;|B\rangle\,. \tag{7.10}$$

More formally, it is possible to show that (using Eq. 7.9 and Eq. 7.6), in this two-dimensional subspace, the matrix form of W reads

$$W = \begin{bmatrix}\langle G|\,W\,|G\rangle & \langle G|\,W\,|B\rangle\\ \langle B|\,W\,|G\rangle & \langle B|\,W\,|B\rangle\end{bmatrix} = \begin{bmatrix}\cos[2\theta] & \sin[2\theta]\\ -\sin[2\theta] & \cos[2\theta]\end{bmatrix}. \tag{7.11}$$

Notice that the labels B and G, which correspond in our drawing to y and x respectively are switched compared the usual order, so the rotation seems to be clockwise but it's not. In this

subspace[2], $W = R_Y(4\theta)$. Now that we identify W as a rotation, it is easy to prove that W^k correspond to a rotation of $2k\theta$, i.e. $W = R_Y(4k\theta)$. Since the initial state is already carring an angle θ, this proves Eq. 7.10.

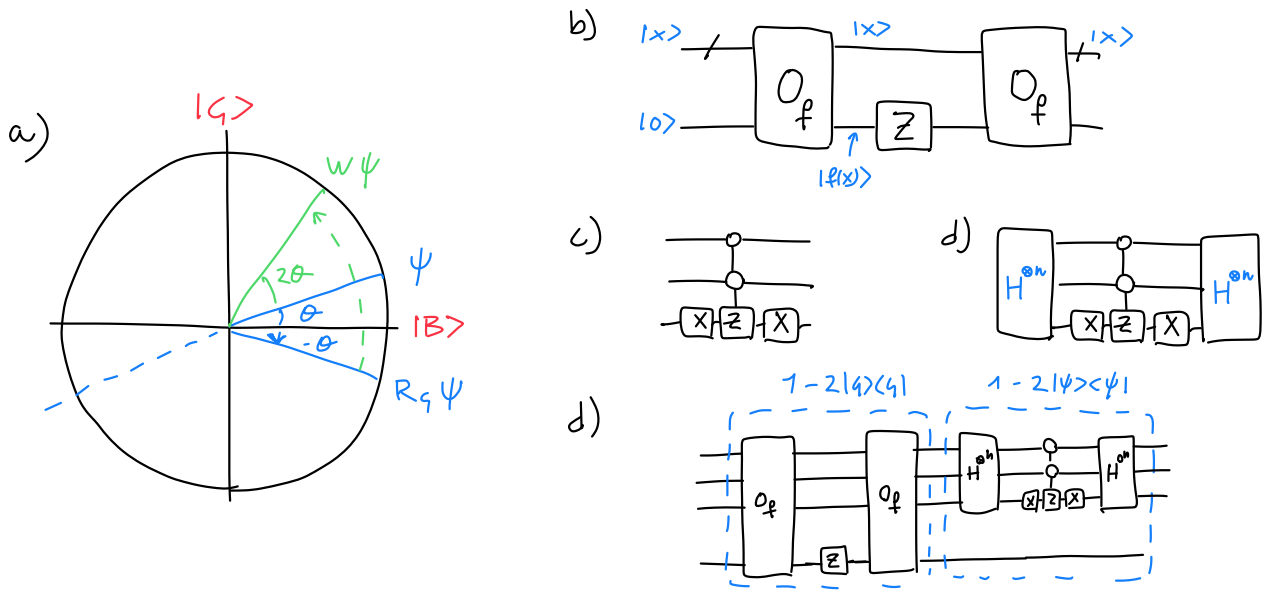

Figure 7.1: a) The action of the W operator in the plane spanned by $|G\rangle$ and $|B\rangle$, from an initial state $|\psi\rangle$. b) The circuit that implements R_G assuming the existence of an oracle O_f. c-d) The circuits that implements R_0 and R_ψ, when $|\psi\rangle = H^{\otimes n}|0\rangle^{\otimes n}$. The multicontrolled-Z gate is activated when the control qubits are in the input state 0 (hence the white dot instead of the usual black one). e) The full circuit for W, including the ancilla qubit.

The probability of success after k steps, is

$$P_{\text{succ}}^{(k)} = \sin^2\left[(2k+1)\theta\right]. \tag{7.12}$$

Now, if we suppose that we start ($k = 0$) from the uniform superposition state, we have that $\theta = \arcsin\left(\sqrt{P_{\text{succ}}^{(0)}}\right) = \arcsin\left(\sqrt{2^{-n}}\right)$. Setting the target final probability to $P_{\text{succ}}^{(k)} = 1$, we can find the required number k of steps to achieve this maximal amplitude amplification.

$$1 = \sin^2\left[(2k+1)\theta\right] \tag{7.13}$$

$$1 = \sin^2\left[(2k+1)(\arcsin\left(\sqrt{2^{-n}}\right))\right] \tag{7.14}$$

$$1 = \sin\left[(2k+1)(\arcsin\left(\sqrt{2^{-n}}\right))\right] \tag{7.15}$$

$$\frac{\pi}{2} = (2k+1)(\arcsin\left(\sqrt{2^{-n}}\right)) \tag{7.16}$$

[2]the R_Y gate has been defined as a gate acting on a single qubit. Here we use only its matrix form, that in this two-dimensional sub-space is equal to the one corresponding to the gate operator.

where we first take the square root of both sides, then the $\sin^{-1}$ of both sides. Solving for k we have

$$k = \frac{\pi}{4\arcsin\left(\sqrt{2^{-n}}\right)} - \frac{1}{2} \xrightarrow{n\to\infty} \frac{\pi}{4}\sqrt{2^n} - \frac{1}{2} \tag{7.17}$$

Indeed, for small arguments, i.e. when $n \to \infty$, $sin^{-1}(\epsilon) \approx \epsilon$. This means that the scaling of the number[3] of "operations" needed to find the marked element scales as $\sqrt{2^n}$, where 2^n is the total number of elements, thus realizing a **quadratic speed-up**.

Notice that, mathematically the quadratic speedup is connected with the fact that in quantum mechanics the probability is the square of the wavefunction component. The reader can repeat all the steps substituting the occurences of $\sqrt{2^{-n}}$ with a different power, i.e $\sqrt[\beta]{2^{-n}}$ and arrive to a different scaling of k. This is the reason behind why *most* quantum algorithm with quantum advantage shows a quadratic speed-up, including Grover's algorithm.

Notice that, if our initial $P^{(0)}_{\text{succ}} = 1/4$, corresponding to $\theta = \pi/6$, then we can reach $P^{(1)}_{\text{succ}} = 1$, with just one application of the W operator. Conversely, and counterintuitively, a larger $P^{(0)}_{\text{succ}} = 1/2$ is the worst case scenario, as it can be understood also geometrically, starting from $\theta = \pi/4$. This case can be treated introducting a different type of oracle, which lowers the probability of success, and will not be featured here. Clearly these cases can be applied when (and rarely) we know the initial probability of success.

One example is the hamiltonian simulation using LCU (Sect. 4.4). In this case one can tune the Hamiltonian dynamics circuit (i.e the time step t) in such a way that the LCU walk operator yields to a probability of success in Eq. 4.38 of $1/4$, perform one step of amplitude amplification, and apply again LCU, and so on.

Circuit implementation. All of this seems abstract, and partially it is. We can however write formally the quantum circuit to implement W, assuming the existence of an *oracle* that is able to identify the Good state[4]. This oracle (cfn. Sect. 2.3.1) is a black box that acts on an ancilla qubit if the input is the marked state:

$$O_f \left|x\right\rangle \left|0\right\rangle = \left|x\right\rangle \left|f(x)\right\rangle, \tag{7.18}$$

where $f(x) = 1$ if $x = G$ and 0 otherwise[5]. Now, we can simply use the value of the ancilla qubit to "trigger" a bit flip. We can do this simply using a Z gate on the ancilla, as shown in Fig. 7.1 (a). This sub-circuit, including the un-computation of the bit-flip using the second oracle call, realizes the trasformation $\left|G\right\rangle \left|0\right\rangle \to -\left|G\right\rangle \left|0\right\rangle$, which is exactly R_G. The knowledge about G is now hidden inside the oracle, and specific circuit implementation of O_f vary case by case. The number of oracle calls determines the se-called query complexity of the algorithm. This number can be meaningfully compared to the number of classical operations to search for G in an array.

The second reflection does not depend on G so it does not need an oracle call. We will show a circuit to perfom this reflection in case that the starting state is the uniform superposition (Fig 7.1(c-d). In the panel (c) we show how to perfom a reflection about the

[3]this is exact if the number of rotation is exaclty an integer, otherwise we cannot reach 100% probability.

[4]let us assume now that the subspace is indeed just one state, such that there is only one marked element to find.

[5]to have a reversible definition, the action on the ancilla register $\left|a\right\rangle$ is generalized to $\left|a \oplus 1\right\rangle$.

state $|0\rangle^{\otimes n}$, namely this circuit flips the component of $|0\rangle^{\otimes n}$. To implement a reflection about a generic state $|\psi\rangle$, one need to perform the usual pre and post-rotation U that prepares the state $|\psi\rangle$ from $|0\rangle^{\otimes n}$. In our case, $U = U^\dagger = H^{\otimes n}$. This idea can be generalized in the following Section when the W operator needs to be applied considering a well definite state $|\psi\rangle$.

7.2 Oracles and quantum advantage

At this point, many readers will demand at least one example or at least a sketch of how these oracles should look like. As we have seen, the oracle must contain the information regarding the marked state. Most of the algorithms are written in such a way to never explicit provide a circuit decomposition for the oracle, and focus on the higher-level part of the flow. This generates some confusion when coming to specific examples.

Consider the case of a database search, like "find the location of John Smith in this list" The computational task is to find the memory address x of the data d_x ="John Smith". The inefficient way to think about the oracle is hardcoding the database. It is clear that the number of operations needed to input each entry is the same as those required to solve the problem classically, as one would need to sequentially insert the database in some way in the oracle.

If we consider the example of searching in a human-generated database, the way out is to postulate a method for loading the database in superposition. This is the task of a Quantum RAM (QRAM) (2). One assumes the existence of a LOAD function, that given two registes performs the following

$$|x\rangle_{\text{address}} |0\rangle_{\text{value}} \xrightarrow{\text{LOAD}} |x\rangle_{\text{address}} |d_x\rangle_{\text{value}} , \tag{7.19}$$

and can operate in superposition, such that one first create a superposition of all addresses, and then obtain the superposition of values

$$\sum_{x=0}^{2^n-1} |x\rangle |0\rangle \xrightarrow{\text{LOAD}} \sum_{x=0}^{2^n-1} |x\rangle |d_x\rangle \tag{7.20}$$

Unfortunately, at the moment, it is not clear how to realize it.

Returning to our oracle, at each step of the search algorithm, a load operation of the database is performed, and the register on which the data $|d_x\rangle$ is loaded is compared with the target data string "John Smith", $|d_G\rangle$.

In a classical emulation of an amplitude amplification (or Grover's) algorithms, many examples hardcode the database in the oracle, including some line of (pseudo) code such as `if x = G, then f(x) = 1` , but this is only possible in classical emulation, and is useful only to understand the reflection steps.

A practical implementation of a quantum oracle that does not resort to a database loading step is possible if the function $f(x)$ can be computed explicitely inside the oracle. In this case, the function is eveluated "on the fly" without the need to querying a database. In this

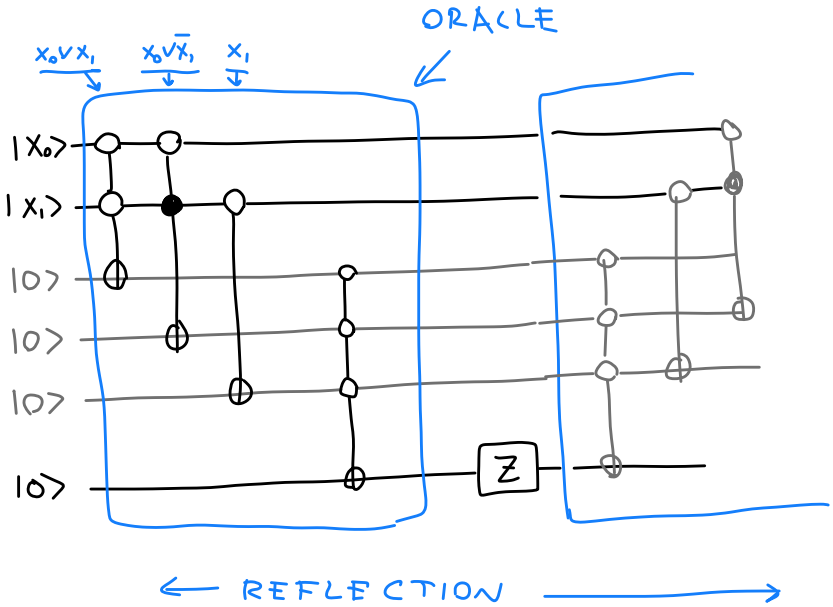

Figure 7.2: Circuit for the oracle corresponding to the example described in the text. The full reflection is implemented using the oracle, a Z gate, and the reverse oracle to "uncompute" the ancilla qubits.

case the Good state(s) can be the solution(s) of a logical proposition, such as in a satisfiability problem.

Suppose for instance that we want to find the solution of the following satifiability statement involving two binary variables x_0, x_1 and three clauses[6]

$$(x_0 \vee x_1) \wedge (x_0 \vee \neg x_1) \wedge (x_1) \tag{7.21}$$

In this case, we know how to state the problem but we do not know readily the solution. Here, the predicate is satisfied by the string $[x_0, x_1] = [1, 1]$. We can construct the oracle using multi-controlled NOT gates and ancillas (see Fig. 7.2).

First of all, it is not apparent how to write an OR gate using quantum gates. Since we have three statement that needs to be true simoultaneously we can employ three ancilla bits, one for each logical statement. Each is initialized to 0 and will be set to 1, if its associated statement is falsified by the input string. Finally we can use a final ancilla qubit, also initialized in 0, which is multicontrolled by the three previous ancilla. This final ancilla will be set to 1 if and only if the three ancilla are still in the state 000, namely if they have not been activated. The value of the final ancilla is the output of the oracle.

Each statement, that in this example contains an OR logical operation, is translated into a controlled operation, where the control qubits are the 'input' qubits and the target is the associated ancilla. The complementary of an OR statement is an AND statement involving the negated variables. For instance, the statement that falsifies the first clause is

[6] where, $\vee, \wedge, \neg$ symbols denote OR, AND, NOT.

$(x_0 \vee x_1)^C = (\neg x_0 \wedge \neg x_1)$, which can be implemented using a multicontrolled "00"-CX gate. Indeed in this case, the only string that falsifies $(x_0 \vee x_1)$ is $[0, 0]$. This input will trigger the first ancilla bit. This operation alone will not "activate" the final ancilla.

This implementation of the oracle will require only a number of ancilla bits and operations that grows with the number of clauses in the statement, but not as the dimension of the whole computational space.

7.3 Amplitude estimation

The W operator, also called Grover's walk operator, can be used to estimate θ, which controls the overlap of ψ with the $|G\rangle$ subspace. In a search context, this knowledge is not particularly critical, but quantum amplititude estimation (QAE) finds many applications beyond searching.

We first observe tha the eigevalues of the $W = R_Y(4\theta)$ in this space are simply

$$\lambda_\pm = e^{\pm i2\theta} = e^{\pm i2 \arcsin\left(\sqrt{P_{\text{succ}}}\right)} \tag{7.22}$$

At this point we can use QPE (Sect. 4.5.1) to measure the phase and with postprocessing calculate P_{succ}. This is an example of **conversion between a probability and a phase** which finds general application in quantum algorithms (see, if interested, Ref. (3) for a technical discussion on conversion between probability/amplitude and phase oracles.)

7.3.1 Evaluating integrals with QAE

A possible application of QAE is the evaluation of integrals (Riemann sums) of the general form

$$a = \sum_{i=0}^{2^n} f_i \rho_i, \tag{7.23}$$

which approximates the integral of a function $f(x)$ over a *normalized* distribution $\rho(x)$, and the functions are rescaled as to have a normalized value, $a \in [0, 1]$. Clearly one assumes a finite domain, and use a grid discretization made of 2^n points, exactly as in Sect. 5.3.

To apply QAE one needs to have an operator $\mathcal{A}$, that prepare a state $|\psi\rangle$ such that $a = \sin^2(\theta)$, following the notation above. In all references on the matter, the labelling of the states is different from above, but a mapping is possible. Here I will use the new notation, which is the one more adopted, while the $|G\rangle$, $|B\rangle$ is lighter and was instrumental for understanding quickier the QAA and QAE algorithms.

We now make use of a $n + 1$ register, and split it in two. The first n qubits are the computational space, while the last one is used to flag the Good and the Bad subspaces. Formally we can match the two notations as

$$|G\rangle_{n+1} = |\psi_1\rangle_n |1\rangle\,, \qquad |B\rangle_{n+1} = |\psi_0\rangle_n |0\rangle\,. \tag{7.24}$$

Then we define the operator $\mathcal{A}$ with

$$\mathcal{A}\,|0\rangle_n |0\rangle = \sqrt{a}\,|\psi_1\rangle_n |1\rangle + \sqrt{1-a}\,|\psi_0\rangle_n |0\rangle\,. \tag{7.25}$$

Again, by definition, we measure the target qubit in '1' with probability a. The W operator is (re)defined as

$$-W \to Q = \mathcal{A}\mathcal{S}_0\mathcal{A}^\dagger\mathcal{S}_{\psi_0} \tag{7.26}$$

where

$$\mathcal{S}_{\psi_0} = 1 - 2\left|\psi_0\right\rangle_n \left|0\right\rangle \left\langle 0\right| \left\langle\psi_0\right|_n, \tag{7.27}$$

is the (negative) reflection about the Bad state, i.e. $\mathcal{S}_{\psi_0} = -R_G$, following the notation above[7], and

$$\mathcal{S}_0 = 1 - 2\left|0\right\rangle_{n+1} \left\langle 0\right|_{n+1} \tag{7.28}$$

is the reflection on $\left|\psi_0\right\rangle_n \left|0\right\rangle$. In this way the sequence $\mathcal{A}\mathcal{S}_0\mathcal{A}^\dagger$ reproduces R_ψ. Before, for search porpuses, we prepared a uniformed superposition state, such that the equivalent of $\mathcal{A}$ was the operator $H^{\otimes n}$. Here we need to prepare exactly a state such that we can encode Eq. 7.23.

To realize encode a in the amplitude of the Good state, the $\mathcal{A}$ operator needs to act on the computational register, but also on the ancilla. This can be done, assuming $\mathcal{A} = \mathcal{F}(U \otimes I)$, where the *distribution loader* operator U performs

$$U\left|0\right\rangle_n = \sum_{i=0}^{2^n-1} \sqrt{\rho_i}\left|i\right\rangle_n, \tag{7.29}$$

and $\left|i\right\rangle_n$ is the usual computational n-bit basis state. Using this convention this operator acts only on the computational register, so it needs to be tensored with the identity on the ancilla flag qubit, $(U \otimes I)$, to have the same dimensions of $\mathcal{A}$. Notice that this is a crucial part in view of practical applications. Indeed, this operator needs to be performed avoiding 2^n queries to an oracle that sets all the amplitudes $\sqrt{\rho_i}$ individually. This would invalidate the advantage over a classical Riemann sum approach. State-of-the art distribution loeading methods, such as Grover-Rudolph,(4) have been shown to be practically inefficient for this task. Certain types of distribution can be loaded efficiently if we are willing to pay a preparation error, for instance distribution can be loaded using the reverse-hamiltonian trick proposed by the author of this notes in Ref. (5). Basically, one need to devise a real space hamiltonian (cfn. 5.3) such that its ground state is $\sqrt{\rho(x)}$. For instance, Gaussian distirbution can be generated by harmonic oscillator hamiltonians. The state $U\left|0\right\rangle_n$ could be prepared variationally using VQE, using parametrized circuits. This pre-optimized circuit will be used in $\mathcal{A}$ without the need of a full VQE optimization each time.

The second operator $\mathcal{F}$ needs to prepare f in such a way to be in the format of Eq. 7.25, so it needs to act on the whole register. Formally, for each basis state of the computational $n - bit$ space, this operator performs the following

$$\mathcal{F}\left|i\right\rangle_n \left|0\right\rangle = \left(\sqrt{f_i}\left|1\right\rangle + \sqrt{1-f_i}\left|0\right\rangle\right)\left|i\right\rangle_n. \tag{7.30}$$

This operator usually requires quantum arithmetics. Given that one will need to implement a controlled rotation on the ancilla qubit, we need to match

$$\sqrt{f_i} = \sin\theta_i, \tag{7.31}$$

[7] indeed $-R_B = R_G$.

such that we prepare on the computational space register the amplitudes as $\sin^{-1}[\sqrt{f_i}]$.

The combined action of $\mathcal{A}$ therefore yields

$$\mathcal{A}\left|0\right\rangle_n\left|0\right\rangle = \left(\sum_{i=0}^{2^n-1}\sqrt{f_i}\sqrt{\rho_i}\left|i\right\rangle_n\right)\left|1\right\rangle + \left(\sum_{i=0}^{2^n-1}\sqrt{1-f_i}\sqrt{\rho_i}\left|i\right\rangle_n\right)\left|0\right\rangle, \tag{7.32}$$

such that the probaility of measuring the ancilla qubit in '1' gives Eq. 7.23.

To summarize, QAE can be used to calculate integrals of the form Eq. 7.23. The ultidimensional generalization is already included in this format, by just considering a partitioning of the computational space to treat several dimensions. This method is improperly denoted as "quantum Monte Carlo" in the community, who compress in this way the title of the seminal Ref. (6), and find application only when we can prepare the normalized distribution ρ_i. This excludes in practice the possibility to compute expectation values typical of statistical mechanics where $\rho(x) = e^{-\beta V(x)}/\int dx e^{-\beta V(x)}$. Moreover, we have discretization and truncation errors, that needs to be considered in the error analysis and can reduce the theoretical speed-up from the maximum quadratic one, inherited by QAE.

Bibliography

[1] G. Brassard, P. Hoyer, M. Mosca, and A. Tapp, "Quantum amplitude amplification and estimation," *Contemporary Mathematics*, vol. 305, pp. 53–74, 2002.

[2] V. Giovannetti, S. Lloyd, and L. Maccone, "Quantum random access memory," *Physical review letters*, vol. 100, no. 16, p. 160501, 2008.

[3] A. Gilyén, S. Arunachalam, and N. Wiebe, "Optimizing quantum optimization algorithms via faster quantum gradient computation," in *Proceedings of the Thirtieth Annual ACM-SIAM Symposium on Discrete Algorithms*, pp. 1425–1444, SIAM, 2019.

[4] L. Grover and T. Rudolph, "Creating superpositions that correspond to efficiently integrable probability distributions," *arXiv preprint quant-ph/0208112*, 2002.

[5] S. Chakrabarti, R. Krishnakumar, G. Mazzola, N. Stamatopoulos, S. Woerner, and W. J. Zeng, "A threshold for quantum advantage in derivative pricing," *arXiv preprint arXiv:2012.03819*, 2020.

[6] A. Montanaro, "Quantum speedup of monte carlo methods," *Proceedings of the Royal Society A: Mathematical, Physical and Engineering Sciences*, vol. 471, no. 2181, p. 20150301, 2015.

Chapter 8

Quantum machine learning (basic concepts)

8.1 Kernel methods

8.1.1 Support vector machines

One of the traditional applications of kernel methods are support vector machines (SVM). To understand what quantum SVMs are, we must first briefly introduce regular SVMs. Given a set of N training examples $(\boldsymbol{x}_j, y_j)$, each marked as belonging to one of two categories, an SVM training algorithm constructs a model that assigns new examples to either category. In this case, we will consider a division into two classes, $y_j = \pm 1$. The input data, $\boldsymbol{x}_j$, is a d-dimensional array of numbers $(x_j^1, x_j^2, \ldots, x_j^d)$.

The aim of a SVM is to classify data, so geometrically speaking, finding $(d-1)$-dimensional hyperplane that divides the data. This hyperplane is known as a linear classifier. Since multiple hyperplanes could potentially classify the data, a reasonable choice for the best hyperplane is the one that provides the greatest separation or margin between the two classes (see Fig. 8.1,a).

The equation of an hyperplane reads

$$\boldsymbol{w}^T \boldsymbol{x} - b = 0, \tag{8.1}$$

where $\boldsymbol{w} = (w^1, w^2, \ldots, w^d)$ is a vector. To create a "margin", we define the following. The decision rule to classify a point $\boldsymbol{x}_j$ in the $+$ $(-)$ class is asking that the cost function is

$$\boldsymbol{w}^T \boldsymbol{x}_j - b \geq 1, \qquad \text{if } \boldsymbol{x}_j \text{ is in class } + \tag{8.2}$$

$$\boldsymbol{w}^T \boldsymbol{x}_j - b \leq -1, \quad \text{if } \boldsymbol{x}_j \text{ is in class } -. \tag{8.3}$$

This can be rewritten using the label y_j as

$$y_j(\boldsymbol{w}^T \boldsymbol{x}_j - b) \geq 1, \tag{8.4}$$

for all dataset points $1 \leq j \leq N$. The "contested" region, by definition, is between the two hyperplanes $\boldsymbol{w}^T \boldsymbol{x}_j - b = 1$, and $\boldsymbol{w}^T \boldsymbol{x}_j - b = -1$.[1] A good boundary choice is the one

[1] the existence of the "margin" region follows from our choice of using the ± 1 thresholds, and not a simple $\geq 0, \leq 0$ decision rule.

that maximize the width of the "margin", or "contested" region. This will simplify the label prediction for an unseen datapoint $\boldsymbol{x}_k \to y_k = \pm 1$. Geometrically, the distance between the two hyperplane can be found to be $2/|\boldsymbol{w}|$, where $|\cdot|$ is the norm of the vector.
Matematically, finding the separating hyperplane means to minimize $|\boldsymbol{w}|$, under the constraints of Eq. 8.4, i.e. the $\boldsymbol{w}$ vector should define the correct direction as to classify correctly the training dataset (assuming that the data is exactly separable by a plane!).

This constrained minimization can be performed using the Lagrangian multiplier formalism.[2] Given that minimizing $|\boldsymbol{w}|$ also minimizes $|\boldsymbol{w}|^2/2$, the cost function one aims to minimize is

$$L = \frac{|\boldsymbol{w}|^2}{2} - \sum_j \alpha_j \big[y_j(\boldsymbol{w}^T \boldsymbol{x}_j - b) - 1 \big], \quad \alpha_j \geq 0. \tag{8.5}$$

We need to perform some extra steps to arrive to a a more useful expression, where we can apply the kernel trick. We need to find the stationary point of L, by finding the gradients with respect to $\boldsymbol{w}$, and b, and setting them to zero. We find that

$$0 = \frac{\partial L}{\partial \boldsymbol{w}} = \boldsymbol{w} - \sum_i \alpha_i y_i \boldsymbol{x}_i \qquad \to \qquad \boldsymbol{w} = \sum_i \alpha_i y_i \boldsymbol{x}_i. \tag{8.6}$$

This equation means that the solution is a linear combination of the dataset samples. Then,

$$0 = \frac{\partial L}{\partial b} = -\sum_i \alpha_i y_i. \tag{8.7}$$

Substituting these equations into Eq. 8.5 we obtain a cost function that only depends on the α's:

$$L = \sum_i \alpha_i - \frac{1}{2} \sum_i \sum_j \alpha_i \alpha_j \; y_i y_j \; \boldsymbol{x}_i \cdot \boldsymbol{x}_j, \tag{8.8}$$

which now we need to maximize as a function of α_i. It is apparent that now the optimiztion only depends on pair of datasamples. Another nice feature is that the optimization problem is convex so finding the optimal α_i's is possible (no multiple local minima), if the dataset are exactly linearly separable. Once that the optimum has been found $\alpha_i^{\text{opt.}}$, a new sample $\boldsymbol{x}_{\text{new}}$ can be classified using again the dot products with all the training points. This follows from the decision rule and the definition of $\boldsymbol{w}$,

$$y_{\text{new}} = \text{sign}\big[\sum_i \alpha_i^{\text{opt.}} y_i \; \boldsymbol{x}_i \cdot \boldsymbol{x}_{\text{new}} \big]. \tag{8.9}$$

Kernel trick. The idea is the following. Sets that cannot be linearly separable in d dimension, may become separable if a transformation $\phi : \boldsymbol{x} \to \boldsymbol{x}'$ is applied. This transformation, called *feature map* can also promote the points to a higher dimensional space, where finding hyperplanes separating the points can be easier (see Fig. 8.1,b).

[2]Here, minimizing a function $f(x)$, subject to the constraint $g(x) = 0$ requires minimizing $L(x, \alpha) = f(x) + \alpha g(x)$. If there are multiple constrains this is modified as $f(x) + \sum_j \alpha_j g_j(x)$. In the case of inequality constraints, like $g(x) \geq 0$, then the cost function is modified as $L(x, \alpha) = f(x) - \alpha g(x)$, with $\alpha \geq 0$. This is our case.

All the dot products $\boldsymbol{x}_i \cdot \boldsymbol{x}_j$ are replaced by

$$\phi(\boldsymbol{x}_i)\phi(\boldsymbol{x}_j) = K(\boldsymbol{x}_i, \boldsymbol{x}_j), \tag{8.10}$$

which is called *kernel*. This function can understood as a modified metric that measures the distance between the data points in a new space, the feature space.

Notice that a kernel has the following properties $K(\boldsymbol{x}, \boldsymbol{x}') = K(\boldsymbol{x}', \boldsymbol{x})$, and $K(\boldsymbol{x}, \boldsymbol{x}') \geq 0$. The Kernel is a positive semi-definite $N \times N$ matrix.

Eq. 8.8 becomes

$$L = \sum_i \alpha_i - \frac{1}{2} \sum_i \sum_j \alpha_i \alpha_j \; y_i y_j \; K(\boldsymbol{x}_i, \boldsymbol{x}_j). \tag{8.11}$$

This can be solved using quadratic programming algorithms, or using gradient descent. Notice that, the complexity of the optimization task alone only depends on N, but not on the dimensionality of the data points, d. This has been eliminated by the inner product. The dimensionality of the data instead determines the complexity in evaluating the K matrix.

Notice also that Eq. 8.11 is modified into

$$L = \sum_i \alpha_i - \frac{1}{2} \sum_i \sum_j \alpha_i \alpha_j \; y_i y_j \; K(\boldsymbol{x}_i, \boldsymbol{x}_j) - \frac{1}{\lambda} \sum_i \alpha_i^2, \tag{8.12}$$

to consider the case when a perfect separation is impossible, and $\lambda > 0$ is a regularization parameter.

8.1.2 Quantum SVM

At this point there are several ways in which a quantum computer can (try) to fit in this context

- The more straighforward is to use quantum primitives to simply speed-up the linear algebra operations. For instance Ref. (1) proposed 10 years a go a quantum SVM algorithms that make use of a (quantum) exponential faster way to perform the dot product operation. The practical problem is that this require a QRAM. The more fundamental problem is that also this approach has been de-quantized recently. See Sect. 8.4.

- A more recent and feasible proposal is to use quantum circuit to create the feature map ϕ. This is the kind of quantum SVM (QSVM) we will considered in this Section.

It is important to note, that here the possible hope for quantum speed-up is obtaining a Kernel that improves the quality of the classification. Namely, it may use less training sample to obtain the same level of correctness compared to the best classical kernel. The quantum-linear algebra philosophy would instead speed-up the ML subroutins, leaving unchanged the "quality" of the ML output (regression, classification..)

For certain, artificially constructed datasets QSVMs display an exponential speedup compared to any known classical algorithm(2). However, practical datasets, stemming from real use cases relevant for science and technology do not possess such ad-hoc structure, so that

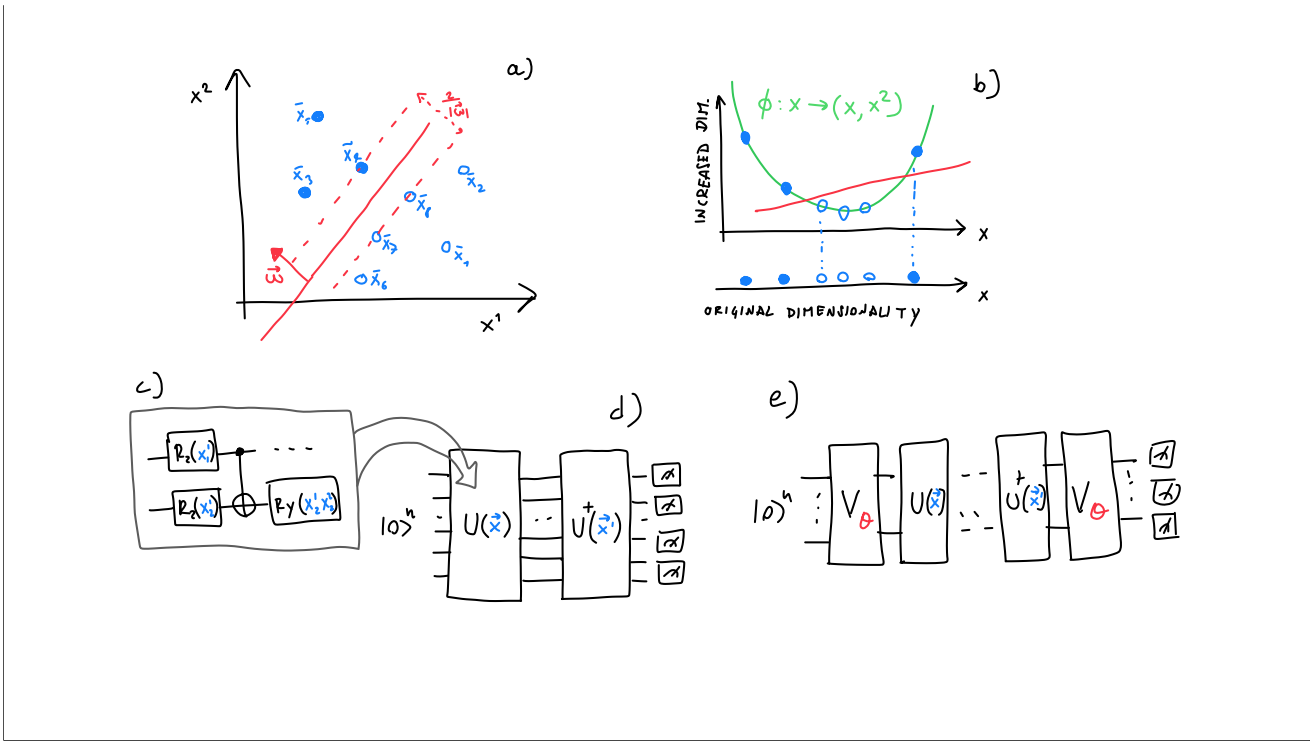

Figure 8.1: (a) Perfectly, linearly separable datasets in two dimensions. (b) Non-separable dataset in one dimension become separable in two dimension when using a parabolic feature map. (c) Example of data encoding in a circuit. Each component x_k of the data point $\boldsymbol{x}$ is inserted in the circuit as a rotation angle. The dimensionality of the qubit register is not strictly varying with the dimensionality d of the data. (d) The circuit to evaluate the matrix element $K(\boldsymbol{x}, \boldsymbol{x}')$. (e) Trainable feature map for kernel aligment.

evidence, though promising, does not imply that QSVMs will offer a quantum speed-up for *every* dataset. In practical setting, the speed-up needs to be assessed empirically.

The idea of QSVMs is to have a quantum feature map $\phi : X \to F$ where X is the input space, and F is the feature space. Notice that if ϕ is given by a unitary operator $U(\boldsymbol{x})$, acting on n qubits, evaluating the feature map itself is generally exponentially hard. Fortunately, for the SVM algorithm we needs to compute the scalar product in the feature space only. This is instead possible. It is also important to note that it is still not clear how the number of qubits n relates to the input space dimensionality d, or the sample size N.

Given that a quantum circuit U can define a classically intractable feature map, the hope for QSVM is that this classically inaccessible feature map is the one classifying the data better than any classical SVM. In the following, we will just review the basic idea, and sketch practical implementation methods. There are several ingredients that needs to be considered:

Data loading. First of all, we need a circuit to *load* the data. In most examples, the (normalized) data is loaded as the angle value of a rotation gate. The entangling structure is user defined (see Fig. 8.1,c)(3) There are many way to construct circuits to load classical

data. Each of them defines a new quantum kernel matrix.

Kernel evaluation. Suppose we have defined a unitary $U(\boldsymbol{x})$. How do we calculate $K(\boldsymbol{x}, \boldsymbol{x}')$ for each pair of data points? The most popular way, is to use a *fidelity* measurement. The quantum state produced by the unitary $U(\boldsymbol{x})$, acting on the zero-state $|\mathbf{0}\rangle$ is $U(\boldsymbol{x})\,|\mathbf{0}\rangle = |\psi(\boldsymbol{x})\rangle$. To compute the overlap $|\,\langle\psi(\boldsymbol{x})|\psi(\boldsymbol{x}')\rangle\,|^2$ one simply need to measure the normalized frequency of of n-bits "$\mathbf{0}$" readout (see Fig. 8.1,d)

This means that, the entries of the matrix K are computed with a statistical noise. This introduces and additional complication, because it has been proposed that, the probability of measuring the string "$\mathbf{0}$" decrease exponentially with the number of qubits. For a small number of shots (i.e. circuit repetitions) the empirically estimated kernel is approximately the identity, $K \approx I$. This also would imply that it is hard to distinguish two kernels $K^{'}$ and $k^{''}$. This issue has been proposed recently(4) and goes by the name of *exponential concentration of kernels*.

Kernel alignment. It is easy to understand that empirical quantum feature maps may not be suited for every dataset. A concept well known in conventional SVM is "kernel alignment", namely devising a kernel which provide the best information for the of problem at hand(5). A practical strategy consists in using circuits with additional variational parameters $\boldsymbol{\theta}$, to be optimized together with the $\boldsymbol{\alpha}$ coefficients (see Fig. 8.1,e).

8.2 Quantum neural networks

Classical neural networks (NN) consist of units called artificial neurons, each defined with parameters θ's. These neurons receive outputs from other neurons to their left and their outputs are processed by neurons to their right (order of operation flows from left to right), continuing until a final layer is reached and read. Through a reduction operation, a value is obtained from this output layer, which is then used to evaluate a loss function. In the context of supervised learning, i.e. classification, the output y is compared with the expected value y_i for input $\boldsymbol{x}_i$. The data $\boldsymbol{x}_i$ enters the neural network through the first layer, possibly after some pre-processing.

Quantum neural networks (QNN) aim to be a generalization of this concept, but there isn't a precise definition; instead, there are various approaches.

A straightforward generalization isn't feasible. Neurons are highly nonlinear functions that process linear combinations of inputs. Nonlinear functions aren't as simple to implement in quantum mechanics, and the search for a quantum equivalent of perceptrons is ongoing. Currently, the most widely accepted definition of a QNN is that of a simple variational circuit, similar to those seen in the Chapter 6

A QNN consists of three blocks. A *data loading circuit*, akin to what's used in QSVMs, where the data is loaded. Then a *trainable circuit* with free variational parameters, followed by a *measurement block* and post-processing (conceptually similar to conventional neural networks). Since measurement is a nonlinear process, a QNN holds the potential to behave like a neural network. To be concrete, one possibility (among many) applicable to binary

classification is to measure all n qubits, with the final output being the parity of the string. Alternatively, one can read only a single qubit, and so on.

Another fundamental difference between a classical NN and a QNN is that the success of the former relies on a stable optimizer, backpropagation, while it's unclear whether training QNNs is possible at all. We'll address the problem of barren plateaus after introducing the concept of "learning" in a slightly more formal manner. We will extend the problem of simple binary classification.

Given a data input domain X and a label domain Y, we assume that there is a ground truth mapping $f^{\text{true}} : X \to Y$ of inputs to target labels (the label can vary also in the continuum). In practice, we have finite set of inputs sampled from a probability distribution $p(\boldsymbol{x})$, with $\boldsymbol{x} \in X$, together with their target labels $\mathcal{D} = \{(\boldsymbol{x}_1, y_1), ..., (\boldsymbol{x}_N, y_N)\}$ with $(\boldsymbol{x}, y) \in X \otimes Y$.

The task of learning is to find a model $f : X \to Y$ from a class of model functions $\mathcal{F}$ that is closest to the f^{true} input-label mapping. Operatively, can then define a loss function $L : Y \otimes Y \to \mathbb{R}$ that tells us how well a label predicted by f compares to the true label.

$$f^{\text{opt.}} = \text{argmin}_{f \in \mathcal{F}} \int_X d\boldsymbol{x}\ p(\boldsymbol{x})\ L(f(\boldsymbol{x}), f^{\text{true}}(\boldsymbol{x})). \tag{8.13}$$

However, empirically we can access only the dataset, which elements are distributed according to $p(x)$. So this operatively becomes

$$f^{\text{opt.}} = \text{argmin}_{f \in \mathcal{F}} \frac{1}{N} \sum_{i=1}^{N}\ L(f(\boldsymbol{x}_i), y_i). \tag{8.14}$$

Once that a cost function L can be obtained, one can adopt the usual classical parameters optimization outer loop to find the minimum.

Once that the parameters have been optimized, one then need to check the performance of the optimal model on *unseen* data. This is done by using a *test set*. This is common practice in both NN and QNN and we will not focus on this aspect. Here we mostly want to list the differences between NN and QNN.

One of the most important issue of QNN (which is not present in NN generally), is their *trainability*, even at a conceptual level. Unfortunately, it has been shown theoretically and numerically that the gradient of L is exponentially small in the number of qubits, n. This issue is called *barren plateau*(6) and is the most important setback in quantum machine learning.

8.3 QML and practical quantum advantage

Let's conclude this chapter with a couple of negative outlook statements for QML.

Firstly, let's focus on the obvious question of where the potential quantum advantage for QML lies compared to classical ML. Currently, QML only has access to theoretical tools or models on a few qubits. This is a fundamentally different situation from ML, which has established its successes empirically. A theoretical framework is now being developed to justify and rationalize the empirical successes of ML.

At present, we do not have a quantum computer that is sufficiently large and noiseless to heuristically search for a human-generated (or classical) dataset for which QML outperforms the best ML. On the other hand, there are theoretical guarantees of efficiency, but only for highly structured models that lack practical relevance. All in all, what many people are doing is selecting a task, downsizing the dataset, applying a QML method, and hoping for the best. It's also worth noting that quantum computers, especially in fault-tolerant implementations, have very slow I/O communication (see Chapter 1). So, the issue raised in section 7.2 about limitations in database search applies here as well. In general, if one fully considers its practical limitations, quantum computing does not seem useful for big data. Classical computing, on the other hand, is very efficient at manipulating big data when simple operations are needed.

Let's return to our QML or QNN, which at least have the possibility to be implemented in practice, i.e. do not require a QRAM. Here the advantage stems from the ability to recognize classically intractable complex patterns using the quantum feature map. So far, this has been rigorously shown for a somewhat artificial types of dataset(2). It remains to be seen if these pattern occurs also in human generated data, or at least human generated data of real-world interest.

8.4 Dequantization of QML

A lot of QML algorithms with exponential speedup inherit this feature from the linear algebra speed-up (cfn. the HHL algorithm for solving a linear system in polylog time). However, as we briefly discussed, this exponential speed-up vanish as soon as you need to load each entry of the matrix and vector one by one. A QRAM would solve this problem but so far there is no practical method to implement such a data loading device.

It is fair to ask ourself if the speed-up of QML in these case is simply given by the assumed logarithmic encoding of the data, rather than the algorithm itself. This leads to the concept of *dequantization*. Let's us the simplest linear algebra operation, the scalar product. Suppose we have two unit complex-valued vectors $|u\rangle$, $|v\rangle$, with $N = 2^n$ elements. Computing the scalar product $|\langle u|v\rangle|^2$ classically would require N operations, i.e. $\sum_{i=1}^{N} u^*[i]v[i]$. Quantumly, there exist the SWAP test circuit (see Fig. **??**), that can compute this quantity using a number of gates that scales with $n = log_2(N)$, with the usual measurement error which scales as $1/\sqrt{M}$ shots, hence copies of the states $|p\rangle$, $|q\rangle$ that needs to be prepared. The error does not scale with N so the SWAP test seems to realize an exponential speed-up for basic this linear algebra operation.

However, the exponential quantum advantage ceases to exists if we allow also the classical machine to have certain types of access to the data. Let's define *query*(Q) access to an array, the possibility, given a memory index $i \leq N$ to extract its value $u[i]$. This occurs usually in conventional computing, either if we have storedthe full array u in memory, or if we can implicitly compute its value, given a functional relation between i and $u(i)$.

Let's define also *sample*(S) access to the array if we can sample perfectly its elements with probability $|u[i]|^2/||u||^2$, where $||u||^2$ is the total squared norm of the vector. More precisely,

we can can produce independent random samples i, distributed as $|u[i]|^2/||u||^2$.

This condition mimics the collapse of a quantum state. Sampling and query access, $SQ(u)$, to u is the classical equivalent of the assumption that we can prepare copies of the quantum state $|u\rangle$.[3]

With SQ access to the two arrays u and v we can calculate the overlap, within additive precision, using classical Monte Carlo. The Monte Carlo integration eliminates the dimensionality problem also for the classical counterpart, eliminating the exponential speed-up of the SWAP test. The demonstration proceeds as follows

$$|\langle u|v\rangle|^2 = \sum_{i=1}^{N} u[i]^* v[i] = \sum_{i=1}^{N} u^*[i]u[i]\frac{v[i]}{u[i]} = \sum_{i=1}^{N} |u[i]|^2 \frac{v[i]}{u[i]} = \frac{1}{N_s}\sum_{j\sim|u_j|^2}^{N_s} \frac{v[i]}{u[i]}. \tag{8.15}$$

Where we simply divided and multiply by $u[i]$ as to cast the sum into a standard importance sampling MC integration. The S access to u allows us to sample indexes j distributed as $|u_j|^2$. The Q access to u and v allows us to compute the ratio $v[j]/u[j]$. The sum is evaluated stochastically using N_s samples, eliminating the N dependency on the sum.

Bibliography

[1] P. Rebentrost, M. Mohseni, and S. Lloyd, "Quantum support vector machine for big data classification," *Physical review letters*, vol. 113, no. 13, p. 130503, 2014.

[2] Y. Liu, S. Arunachalam, and K. Temme, "A rigorous and robust quantum speed-up in supervised machine learning," *Nature Physics*, vol. 17, no. 9, pp. 1013–1017, 2021.

[3] V. Havlíček, A. D. Córcoles, K. Temme, A. W. Harrow, A. Kandala, J. M. Chow, and J. M. Gambetta, "Supervised learning with quantum-enhanced feature spaces," *Nature*, vol. 567, no. 7747, pp. 209–212, 2019.

[4] S. Thanasilp, S. Wang, M. Cerezo, and Z. Holmes, "Exponential concentration and untrainability in quantum kernel methods," *arXiv preprint arXiv:2208.11060*, 2022.

[5] N. Cristianini, J. Shawe-Taylor, A. Elisseeff, and J. Kandola, "On kernel-target alignment," *Advances in neural information processing systems*, vol. 14, 2001.

[6] J. R. McClean, S. Boixo, V. N. Smelyanskiy, R. Babbush, and H. Neven, "Barren plateaus in quantum neural network training landscapes," *Nature Communications*, vol. 9, Nov 2018.

[3] In the SWAP test we *assume* that we already prepared the two states in some way, i.e. loaded all the elements. The quantum measurements collapse the quantum state, so this is equivalent to asking for the classical SQ access to a classical array.

Part II

Advanced Course

Chapter 9

Block Encoding

In this Chapter we revisit Block Encoding and its usage in modern quantum computation.

9.1 Working in a larger Hilbert space

We start by presenting a simple example illustrating the general strategy of working in a higher-dimensional Hilbert space (compared to the initial system's one) to achieve some goals. In this case we aim to represent objects that are not pure states. This idea is central to block-encoding constructions, where non-unitary operators are embedded into unitary operators acting on a larger space.

Let $\mathcal{H}_S$ denote the Hilbert space of an n-qubit system and $\mathcal{H}_E$ an auxiliary Hilbert space (environment). A mixed state on $\mathcal{H}_S$ is described by a density operator[1]

$$\rho \succeq 0, \qquad \mathrm{Tr}(\rho) = 1. \tag{9.1}$$

A purification of ρ is a pure state $|\Psi\rangle \in \mathcal{H}_S \otimes \mathcal{H}_E$ such that

$$\rho = \mathrm{Tr}_E \left(|\Psi\rangle\langle\Psi| \right). \tag{9.2}$$

The system E is called the environment or ancilla system. *Quantum state purification* refers to the process of representing a mixed state as a pure quantum state of higher-dimensional Hilbert space.

Consider the simplest non-trivial example of a one-qubit mixed state

$$\rho = p\,|0\rangle\langle 0| + (1-p)\,|1\rangle\langle 1|, \qquad 0 \le p \le 1. \tag{9.3}$$

A purification of ρ on a two-qubit Hilbert space $\mathcal{H}_S \otimes \mathcal{H}_E$ is given by

$$|\Psi\rangle = \sqrt{p}\,|0\rangle_S|0\rangle_E + \sqrt{1-p}\,|1\rangle_S|1\rangle_E. \tag{9.4}$$

We now compute explicitly the reduced state on the system by tracing out the environment.

The projector onto $|\Psi\rangle$ is

$$|\Psi\rangle\langle\Psi| = p\,|00\rangle\langle 00| + \sqrt{p(1-p)}\,|00\rangle\langle 11| + \sqrt{p(1-p)}\,|11\rangle\langle 00| + (1-p)\,|11\rangle\langle 11|. \tag{9.5}$$

[1] The symbol $\succeq 0$ means that the operator is positive semidefinite.

The partial trace over the environment is defined operationally as

$$\mathrm{Tr}_E(X) = \sum_j \left(I_S \otimes \langle j|_E\right) X \left(I_S \otimes |j\rangle_E\right), \tag{9.6}$$

where $\{|j\rangle_E\}$ is an orthonormal basis of the environment Hilbert space. In the present example we choose $\{|0\rangle_E, |1\rangle_E\}$.

We now evaluate each term separately. For the diagonal term,

$$\mathrm{Tr}_E\left(|00\rangle\langle 00|\right) = |0\rangle\langle 0|. \tag{9.7}$$

Similarly,

$$\mathrm{Tr}_E\left(|11\rangle\langle 11|\right) = |1\rangle\langle 1|. \tag{9.8}$$

Consider now the cross term

$$|00\rangle\langle 11| = |0\rangle_S\langle 1|_S \otimes |0\rangle_E\langle 1|_E. \tag{9.9}$$

Applying the definition of the partial trace,

$$\mathrm{Tr}_E\left(|00\rangle\langle 11|\right) = \sum_{j=0}^{1} \left(I_S \otimes \langle j|_E\right) \left(|0\rangle_S\langle 1|_S \otimes |0\rangle_E\langle 1|_E\right) \left(I_S \otimes |j\rangle_E\right). \tag{9.10}$$

Evaluating the two contributions,

$$\left(I_S \otimes \langle 0|_E\right) \left(|0\rangle_S\langle 1|_S \otimes |0\rangle_E\langle 1|_E\right) \left(I_S \otimes |0\rangle_E\right) = |0\rangle_S\langle 1|_S\langle 0|0\rangle_E\langle 1|0\rangle_E, \tag{9.11}$$

and since $\langle 1|0\rangle = 0$, this term vanishes. The same holds for $j = 1$ because $\langle 0|1\rangle = 0$. Therefore,

$$\mathrm{Tr}_E\left(|00\rangle\langle 11|\right) = 0, \quad \mathrm{Tr}_E\left(|11\rangle\langle 00|\right) = 0. \tag{9.12}$$

Collecting all contributions, we obtain

$$\mathrm{Tr}_E\left(|\Psi\rangle\langle\Psi|\right) = p\,|0\rangle\langle 0| + (1-p)\,|1\rangle\langle 1| = \rho. \tag{9.13}$$

The cross terms disappear because the environment states associated with the different system components are orthogonal. Operationally, the partial trace inserts a complete basis in the environment and uses orthogonality relations $\langle i|j\rangle = \delta_{ij}$, which eliminate coherences between different environment labels.

This example illustrates the general principle that a mixed state on a system can be represented as a pure state in a larger Hilbert space.

Operational Meaning of the Partial Trace. It is important to stress that the partial trace is not a physical gate or a measurement. Given a joint state ρ_{SE} on system S and environment E, the reduced state

$$\rho_S = \mathrm{Tr}_E(\rho_{SE}) \tag{9.14}$$

is obtained by discarding (i.e., ignoring) the environment subsystem. Operationally, this means that after preparing ρ_{SE}, one performs measurements or computations only on the

wires corresponding to S, without accessing E. The reduced state ρ_S is defined precisely so that for any observable O_S acting only on S, one has

$$\mathrm{Tr}[(O_S \otimes I_E)\rho_{SE}] = \mathrm{Tr}[O_S \rho_S]\,. \tag{9.15}$$

Thus, the partial trace provides the unique operator on S that reproduces all measurement statistics obtainable when the environment is inaccessible. It is mathematically equivalent to measuring E and forgetting the outcome, but no physical measurement is required to define it.

9.2 Block-Encoding of a Non-Unitary Matrix

Let A be a linear operator acting on an n-qubit Hilbert space $\mathcal{H}_S$. In general, A is not unitary and therefore cannot be directly implemented as a quantum circuit. The idea of block-encoding is to embed A into a larger unitary operator acting on an extended Hilbert space $\mathcal{H}_a \otimes \mathcal{H}_S$, where $\mathcal{H}_a$ denotes an ancilla register.

We say that a unitary operator U acting on $\mathcal{H}_a \otimes \mathcal{H}_S$ is an α-block-encoding of A if

$$(\langle 0|_a \otimes I_S)\, U\, (|0\rangle_a \otimes I_S) = \frac{A}{\alpha}. \tag{9.16}$$

Equivalently, in matrix block form, one may write

$$U = \begin{pmatrix} \frac{A}{\alpha} & ? \\ ? & ? \end{pmatrix}, \tag{9.17}$$

where the question marks denote blocks that are chosen so that U becomes unitary. Their explicit structure is irrelevant for most algorithmic purposes. Notice that, A is a $2^n \times 2^n$ matrix. If there is only one ancilla, then U has four blocks (two rows, two columns) of size $2^n \times 2^n$, but in general if the ancillary system is made of k qubits, U is made of 2^k rows (and columns).

The normalization constant α plays a crucial role. Since U must be unitary, its operator norm satisfies

$$\|U\| = 1. \tag{9.18}$$

Therefore the embedded block must satisfy

$$\left\| \frac{A}{\alpha} \right\| \leq 1, \tag{9.19}$$

which implies

$$\alpha \geq \|A\|, \tag{9.20}$$

where $\|\cdot\|$ denotes the spectral (operator) norm.

This shows that A must be rescaled in order to fit inside a unitary matrix. For example, if $A = 5X + 3Y$, then one must choose $\alpha \geq \|A\|$. The block-encoding therefore represents the normalized operator A/α.

An explicit way to express such a unitary is

$$U = |0\rangle\langle 0| \otimes \frac{A}{\alpha} + \sum_{(x,y)\neq(0,0)} |x\rangle\langle y| \otimes C_{xy}, \tag{9.21}$$

where the operators C_{xy} are chosen so that $U^\dagger U = I$, so their value directly depends on A.

A formal disclaimer. In the definition of block-encoding,

$$(\langle 0|_a \otimes I_S)\, U\, (|0\rangle_a \otimes I_S) = \frac{A}{\alpha},$$

the tensor products involving $|0\rangle$ and I is a bit unusual since it is the product of a vector and an operator and should be interpreted as linear maps between Hilbert spaces.

Let $\mathcal{H}_a$ denote the ancilla space and $\mathcal{H}_S$ the system space. The unitary U acts on $\mathcal{H}_a \otimes \mathcal{H}_S$. The operator $|0\rangle_a \otimes I_S$ is the map

$$|0\rangle_a \otimes I_S : \mathcal{H}_S \to \mathcal{H}_a \otimes \mathcal{H}_S,$$

defined by $|\psi\rangle \mapsto |0\rangle_a \otimes |\psi\rangle$. Similarly, $\langle 0|_a \otimes I_S$ is the map

$$\langle 0|_a \otimes I_S : \mathcal{H}_a \otimes \mathcal{H}_S \to \mathcal{H}_S,$$

which acts as $(\langle 0|_a \otimes I_S)(|a\rangle \otimes |\psi\rangle) = \langle 0|a\rangle\, |\psi\rangle$.

Therefore the composition $(\langle 0|_a \otimes I_S)\, U\, (|0\rangle_a \otimes I_S)$ is an operator acting on $\mathcal{H}_S$, obtained by embedding a system state into the larger space, applying U, and projecting back onto the ancilla state $|0\rangle_a$. In matrix block form (with respect to the ancilla basis), this simply extracts the top-left block of U.

Inner Product in Operator Space. The space of linear operators acting on a finite-dimensional Hilbert space $\mathcal{H}$, denoted $\mathcal{L}(\mathcal{H})$, is itself a vector space. If $\dim \mathcal{H} = d$, then $\dim \mathcal{L}(\mathcal{H}) = d^2$. This space becomes a Hilbert space when equipped with the Hilbert–Schmidt inner product

$$\langle A, B\rangle := \mathrm{Tr}(A^\dagger B).$$

This generalizes the usual scalar product between vectors.

For example, for rank-one operators $A = |\psi\rangle\langle\phi|$ and $B = |\psi'\rangle\langle\phi'|$, one finds

$$\mathrm{Tr}(A^\dagger B) = \langle\psi|\psi'\rangle\, \langle\phi'|\phi\rangle,$$

so the operator inner product reduces to products of ordinary vector overlaps.

The norm induced by this inner product is the Hilbert–Schmidt (or Frobenius) norm,

$$\|A\|_{HS} = \sqrt{\mathrm{Tr}(A^\dagger A)},$$

which equals $\sqrt{\sum_{i,j} |A_{ij}|^2}$ in matrix form.

This geometric viewpoint allows one to regard operators as vectors in a d^2-dimensional Hilbert space. In particular, orthogonality of operators is expressed as $\mathrm{Tr}(A^\dagger B) = 0$. This structure is frequently used in the analysis of projectors, quantum channels, and block-encoding constructions.

9.2.1 (α, k, ε)-Block-Encoding

In general the definition you may find on other sources also contain a possible error in the encoding. Let A be a linear operator acting on an n-qubit Hilbert space $\mathcal{H}_S \cong \mathbb{C}^{2^n}$. Let k denote the number of ancilla qubits, so that the total Hilbert space is

$$\mathcal{H}_a \otimes \mathcal{H}_S \cong \mathbb{C}^{2^k} \otimes \mathbb{C}^{2^n}. \tag{9.22}$$

A unitary operator U acting on $k+n$ qubits is said to be an (α, k, ε)-block-encoding of A if

$$\left\| \alpha \left(\langle 0^k|_a \otimes I_S \right) U \left(|0^k\rangle_a \otimes I_S \right) - A \right\| \leq \varepsilon, \tag{9.23}$$

where $\|\cdot\|$ denotes the operator (spectral) norm.

The integer k specifies the dimension of the ancilla subspace used to embed A. The projection onto $|0^k\rangle_a$ selects a 2^n-dimensional subspace inside the full 2^{k+n}-dimensional Hilbert space.

In the ideal case $\varepsilon = 0$, the top-left block of U is exactly A/α. For $\varepsilon > 0$, the construction approximates A/α up to operator-norm error ε.

Thus, an (α, k, ε)-block-encoding embeds the rescaled operator A/α into a 2^k-dimensional ancilla-controlled subspace of a larger unitary, with controlled approximation error ε.

9.2.2 Example: Block-Encoding of the Projector $|0\rangle\langle 0|$

In this example we construct an explicit (α, k, ε)-block-encoding of the single-qubit projector

$$\Pi_0 = |0\rangle\langle 0|. \tag{9.24}$$

The construction illustrates how a non-unitary operator can appear as a block of a larger unitary acting on an ancilla plus system register.

Let the system be one qubit in an arbitrary state $|\psi\rangle$, and let the ancilla be one qubit initialized in $|0\rangle_a$. Consider the unitary U acting on ancilla a and system S defined by

$$U = (H_a \otimes I_S)\, \mathrm{CZ}_{a,S}\, (H_a \otimes I_S), \tag{9.25}$$

where $\mathrm{CZ}_{a,S}$ applies Z on the system conditioned on the ancilla being in state $|1\rangle_a$, namely

$$\mathrm{CZ}_{a,S} = |0\rangle\langle 0|_a \otimes I_S + |1\rangle\langle 1|_a \otimes Z_S. \tag{9.26}$$

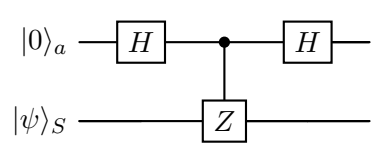

To identify the top-left block of U, we follow the action on an input $|0\rangle_a|\psi\rangle_S$. After the first Hadamard on the ancilla,

$$|0\rangle_a|\psi\rangle_S \longmapsto \frac{1}{\sqrt{2}} \left(|0\rangle_a|\psi\rangle_S + |1\rangle_a|\psi\rangle_S \right). \tag{9.27}$$

After the controlled-Z,

$$\frac{1}{\sqrt{2}}\left(|0\rangle_a|\psi\rangle_S + |1\rangle_a|\psi\rangle_S\right) \longmapsto \frac{1}{\sqrt{2}}\left(|0\rangle_a|\psi\rangle_S + |1\rangle_a Z_S|\psi\rangle_S\right). \tag{9.28}$$

After the final Hadamard on the ancilla, we obtain

$$U\left(|0\rangle_a|\psi\rangle_S\right) = \frac{1}{2}\left(|0\rangle_a|\psi\rangle_S + |1\rangle_a|\psi\rangle_S + |0\rangle_a Z_S|\psi\rangle_S - |1\rangle_a Z_S|\psi\rangle_S\right). \tag{9.29}$$

Regrouping by ancilla basis states gives

$$U\left(|0\rangle_a|\psi\rangle_S\right) = |0\rangle_a \frac{I_S + Z_S}{2}|\psi\rangle_S + |1\rangle_a \frac{I_S - Z_S}{2}|\psi\rangle_S. \tag{9.30}$$

Therefore the top-left block of U is

$$\left(\langle 0|_a \otimes I_S\right) U \left(|0\rangle_a \otimes I_S\right) = \frac{I_S + Z_S}{2}. \tag{9.31}$$

Using the identity

$$\frac{I+Z}{2} = |0\rangle\langle 0|, \tag{9.32}$$

we conclude

$$\left(\langle 0|_a \otimes I_S\right) U \left(|0\rangle_a \otimes I_S\right) = \Pi_0. \tag{9.33}$$

This is an $(\alpha = 1, k = 1, \varepsilon = 0)$-block-encoding of Π_0.

Reflections. The previous construction using the controlled-Z gate generalizes by replacing Z with an arbitrary reflection operator R acting on the system Hilbert space. A reflection is a unitary and Hermitian operator satisfying

$$R^2 = I, \tag{9.34}$$

so that its eigenvalues are ± 1. Any reflection can be written in terms of a projector Π as

$$R = 2\Pi - I. \tag{9.35}$$

Define the controlled-reflection operator

$$\mathrm{C}R = |0\rangle\langle 0|_a \otimes I_S + |1\rangle\langle 1|_a \otimes R, \tag{9.36}$$

and the unitary

$$U = \left(H_a \otimes I_S\right) \mathrm{C}R \left(H_a \otimes I_S\right). \tag{9.37}$$

Applying U to $|0\rangle_a|\psi\rangle_S$ gives

$$U(|0\rangle_a|\psi\rangle_S) = |0\rangle_a \frac{I+R}{2}|\psi\rangle_S + |1\rangle_a \frac{I-R}{2}|\psi\rangle_S. \tag{9.38}$$

Therefore,

$$\left(\langle 0|_a \otimes I_S\right) U \left(|0\rangle_a \otimes I_S\right) = \frac{I+R}{2}, \tag{9.39}$$

which is the projection operator.

9.2.3 Success Probability

We analyze the success probability associated with the block-encoding of the single-qubit projector

$$\Pi_0 = |0\rangle\langle 0|. \tag{9.40}$$

Let the "system" be prepared in an arbitrary state

$$|\psi\rangle = \alpha_0|0\rangle + \alpha_1|1\rangle, \qquad |\alpha_0|^2 + |\alpha_1|^2 = 1. \tag{9.41}$$

Applying U to the joint input $|0\rangle_a|\psi\rangle_S$ yields

$$U(|0\rangle_a|\psi\rangle_S) = |0\rangle_a\, \Pi_0|\psi\rangle_S + |1\rangle_a\ \cdots\,. \tag{9.42}$$

Using

$$\Pi_0|\psi\rangle = \alpha_0|0\rangle, \tag{9.43}$$

we obtain

$$U(|0\rangle_a|\psi\rangle_S) = |0\rangle_a\, \alpha_0|0\rangle_S + |1\rangle_a\, \alpha_1|1\rangle_S. \tag{9.44}$$

The block-encoding succeeds when the ancilla is found in the state $|0\rangle_a$. The success probability is therefore

$$p_{\text{succ}} = \|\Pi_0|\psi\rangle\|^2 = \|\alpha_0|0\rangle\|^2 = |\alpha_0|^2. \tag{9.45}$$

More generally, for a $(\alpha, k, 0)$-block-encoding of an operator A, one has

$$U(|0^k\rangle|\psi\rangle) = |0^k\rangle\frac{A}{\alpha}|\psi\rangle + |\perp\rangle, \tag{9.46}$$

so that the success probability is

$$p_{\text{succ}} = \frac{\|A|\psi\rangle\|^2}{\alpha^2}. \tag{9.47}$$

9.2.4 The SWAP Test as a Block-Encoding of a Projector

Here we re-analyze the popular SWAP test circuit in the block-encoding perspective. In the following, the "system state" refers to the tensor product state on two registers, namely

$$|\Psi\rangle := |\psi\rangle \otimes |\phi\rangle.$$

Let S denote the SWAP operator acting on the two registers, defined by

$$S\,|\psi\rangle|\phi\rangle = |\phi\rangle|\psi\rangle. \tag{9.48}$$

Standard SWAP test derivation. Consider an ancilla qubit initialized in $|0\rangle_a$ and the unitary

$$U_{\text{swap}} = (H_a \otimes I)\,\mathrm{C}S\,(H_a \otimes I), \tag{9.49}$$

where the controlled-SWAP is

$$\mathrm{C}S = |0\rangle\langle 0|_a \otimes I + |1\rangle\langle 1|_a \otimes S. \tag{9.50}$$

The circuit is shown here, where we follow standard circuit symbols for the SWAP gate,

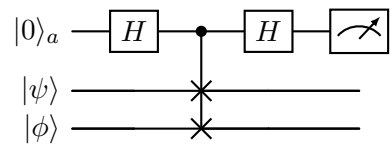

Applying U_{swap} to $|0\rangle_a|\Psi\rangle$ gives

$$|0\rangle_a|\Psi\rangle \longmapsto \frac{1}{\sqrt{2}}\left(|0\rangle_a|\Psi\rangle + |1\rangle_a|\Psi\rangle\right) \longmapsto \frac{1}{\sqrt{2}}\left(|0\rangle_a|\Psi\rangle + |1\rangle_a S|\Psi\rangle\right), \tag{9.51}$$

and after the final Hadamard

$$U_{\text{swap}}(|0\rangle_a|\Psi\rangle) = \frac{1}{2}\Big(|0\rangle_a\big(|\Psi\rangle + S|\Psi\rangle\big) + |1\rangle_a\big(|\Psi\rangle - S|\Psi\rangle\big)\Big). \tag{9.52}$$

Therefore the probability of obtaining outcome 0 on the ancilla is

$$p(0) = \frac{1}{4}\,\|\,|\Psi\rangle + S|\Psi\rangle\,\|^2\,. \tag{9.53}$$

For $|\Psi\rangle = |\psi\rangle|\phi\rangle$ one has $S|\Psi\rangle = |\phi\rangle|\psi\rangle$, hence

$$\|\,|\psi\rangle|\phi\rangle + |\phi\rangle|\psi\rangle\,\|^2 = 2 + 2|\langle\psi|\phi\rangle|^2, \tag{9.54}$$

which yields

$$p(0) = \frac{1 + |\langle\psi|\phi\rangle|^2}{2}. \tag{9.55}$$

Thus repeated runs of the SWAP test allow one to estimate $|\langle\psi|\phi\rangle|^2$. We discuss this circuit and its "dequantization" in Sect.8.4, however this is not the main point here.

Block-encoding interpretation. We now see this circuit as a block-encoding. Since the SWAP operator satisfies $S^\dagger = S$, and $S^2 = I$, hence S is a reflection with eigenvalues ± 1. The orthogonal projectors onto the symmetric and antisymmetric subspaces are

$$\Pi_{\text{sym}} = \frac{I+S}{2}, \tag{9.56}$$

and

$$\Pi_{\text{asym}} = \frac{I-S}{2}. \tag{9.57}$$

So the above circuit is a block-encoding of a projection. Using the same expression as above, we rewrite the final state as

$$U_{\text{swap}}(|0\rangle_a|\Psi\rangle) = |0\rangle_a\,\frac{I+S}{2}\,|\Psi\rangle + |1\rangle_a\,\frac{I-S}{2}\,|\Psi\rangle = |0\rangle_a\,\Pi_{\text{sym}}|\Psi\rangle + |1\rangle_a\,\Pi_{\text{asym}}|\Psi\rangle. \tag{9.58}$$

In particular,

$$\left(\langle 0|_a \otimes I\right) U_{\text{swap}}\left(|0\rangle_a \otimes I\right) = \Pi_{\text{sym}}. \tag{9.59}$$

Therefore the SWAP test circuit provides a $(1,1,0)$-block-encoding of the projector onto the symmetric subspace[2] , and the corresponding success probability is

$$p(0) = \|\Pi_{\text{sym}}|\Psi\rangle\|^2,$$

as above.

[2] As a concrete example, consider two qubits. The symmetric subspace is the set of states invariant under the SWAP operator. A convenient orthonormal basis of this subspace is given by $|00\rangle$, $|11\rangle$, and $\frac{|01\rangle+|10\rangle}{\sqrt{2}}$. In contrast, the antisymmetric subspace consists of states satisfying $S|\Psi\rangle = -|\Psi\rangle$ and is one-dimensional, spanned by $\frac{|01\rangle-|10\rangle}{\sqrt{2}}$.

9.3 Linear Combination of Unitaries

We now deal with the problem of encoding arbitrary matrices, A's.

9.3.1 Pauli Strings as a Basis for Operator Space

We start by defining a good basis for the operator space. Let $\mathcal{H} = (\mathbb{C}^2)^{\otimes n}$ be the Hilbert space of n qubits. The space of linear operators acting on $\mathcal{H}$, denoted $\mathcal{L}(\mathcal{H})$, has dimension $\dim \mathcal{L}(\mathcal{H}) = (2^n)^2 = 4^n$. Define the set of n-qubit Pauli strings

$$\mathcal{P}_n = \{P_1 \otimes \cdots \otimes P_n \mid P_j \in \{I, X, Y, Z\}\}\,. \tag{9.60}$$

For example $III \cdots II, III \cdots IX$, up to $ZZZ \cdots ZZ$. This set contains exactly 4^n elements. Single-qubit Pauli operators satisfy

$$\mathrm{Tr}(P_a P_b) = 2\,\delta_{ab}, \qquad P_a, P_b \in \{I, X, Y, Z\}.$$

For tensor products one has

$$\mathrm{Tr}(PQ) = \prod_{j=1}^{n} \mathrm{Tr}(P_j Q_j),$$

so that

$$\mathrm{Tr}(PQ) = 2^n\,\delta_{P,Q}.$$

Therefore Pauli strings are mutually orthogonal with respect to the Hilbert–Schmidt inner product

$$\langle A, B\rangle = \mathrm{Tr}(A^\dagger B),$$

that we defined in Sect.9.2. Since there are 4^n orthogonal elements in a 4^n-dimensional space, the Pauli strings form an orthogonal basis of $\mathcal{L}(\mathcal{H})$. Consequently, any operator A acting on n qubits admits an expansion **as a sum of unitaries**,

$$A = \sum_{P \in \mathcal{P}_n} \alpha_P\, P, \tag{9.61}$$

with coefficients

$$\alpha_P = \frac{1}{2^n}\,\mathrm{Tr}(PA). \tag{9.62}$$

9.3.2 Prepare and Select Oracles

Assume that an operator A admits a linear combination of unitaries (LCU) decomposition

$$A = \sum_i \alpha_i U_i, \tag{9.63}$$

where U_i are unitary operators and $\alpha_i \in \mathbb{C}$. If some coefficients α_i are negative or complex, we write

$$\alpha_i = |\alpha_i| e^{i\phi_i}. \tag{9.64}$$

We can absorb the phase $e^{i\phi_i}$ into the corresponding unitary by defining $\hat{U}_i = e^{i\phi_i} U_i$. Therefore, without loss of generality, we may assume

$$A = \sum_i |\alpha_i| U_i, \tag{9.65}$$

with $|\alpha_i| \geq 0$. Define the normalization constant

$$\alpha = \sum_i |\alpha_i|, \tag{9.66}$$

The LCU construction relies on two oracles. The *prepare* oracle (that acts on the k ancilla qubits) prepares a superposition over an index register:

$$\text{PREPARE}\,|0\rangle = \sum_i \sqrt{\frac{|\alpha_i|}{\alpha}}\,|i\rangle. \tag{9.67}$$

The *select* oracle (that acts on the whole register) coherently applies the corresponding unitary:

$$\text{SELECT} = \sum_i |i\rangle\langle i| \otimes U_i. \tag{9.68}$$

We will prove that

$$\boxed{(\langle 0| \otimes I)\,(\text{PREPARE}^\dagger \otimes I)\,\text{SELECT}\,(\text{PREPARE} \otimes I)\,(|0\rangle \otimes I) = \frac{A}{\alpha}} \tag{9.69}$$

This provides a $(\alpha, k, 0)$-block-encoding of A, where k is the number of qubits required to index the unitaries U_i.

The proof needs to utilize the fact that we know[3] the action of PREPARE only on the $k-$qubits register $|0\rangle$, so we cannot apply sequentially PREPARE† to the right, but we apply it to the left. So we expand the matrix element of PREP† SELECT PREP between ancilla states $|0\rangle$:

$$(\langle 0| \otimes I)\,\text{PREP}^\dagger\,\text{SELECT}\,\text{PREP}\,(|0\rangle \otimes I) = \sum_{i,j} \sqrt{\frac{\alpha_i \alpha_j}{\alpha^2}}\,(\langle i| \otimes I)\,\text{SELECT}\,(|j\rangle \otimes I). \tag{9.70}$$

Using the explicit form of SELECT,

$$\text{SELECT} = \sum_k |k\rangle\langle k| \otimes U_k, \tag{9.71}$$

we obtain

$$(\langle i| \otimes I)\,\text{SELECT}\,(|j\rangle \otimes I) = \sum_k (\langle i|k\rangle\langle k|j\rangle)\,U_k. \tag{9.72}$$

[3] actually we don't need to know its action to the other strings since we only need the top-left block in the block-encoding picture.

By orthonormality of the computational basis,

$$\langle i|k\rangle\langle k|j\rangle = \delta_{ik}\delta_{kj}, \tag{9.73}$$

hence

$$\sum_{i,j,k} \sqrt{\frac{\alpha_i \alpha_j}{\alpha^2}} \left(\langle i| \otimes I\right) \left(|k\rangle\langle k| \otimes U_k\right) \left(|j\rangle \otimes I\right). \tag{9.74}$$

becomes

$$\sum_k \frac{\alpha_k}{\alpha} (\langle k| \otimes I)(|k\rangle \otimes U_k) = \sum_k \frac{\alpha_k}{\alpha} U_k = \frac{A}{\alpha} \tag{9.75}$$

9.3.3 LCU of a simple unitary

Consider the single-qubit unitary

$$U = e^{i(aX+bY+cZ)}, \tag{9.76}$$

with $a, b, c \in \mathbb{R}$. Although this operator can be implemented directly as a single-qubit rotation, we illustrate how it can also be realized using the LCU framework.

Define

$$H := aX + bY + cZ. \tag{9.77}$$

Using the Pauli algebra $X^2 = Y^2 = Z^2 = I$ and $XY = iZ$ (cyclic permutations), one verifies

$$H^2 = (a^2 + b^2 + c^2)I. \tag{9.78}$$

Let

$$\omega := \sqrt{a^2 + b^2 + c^2}. \tag{9.79}$$

Then

$$H^2 = \omega^2 I. \tag{9.80}$$

We now expand the exponential using its Taylor series:

$$e^{iH} = \sum_{j=0}^{\infty} \frac{(iH)^j}{j!}. \tag{9.81}$$

Separating even and odd powers gives

$$e^{iH} = \sum_{k=0}^{\infty} \frac{(iH)^{2k}}{(2k)!} + \sum_{k=0}^{\infty} \frac{(iH)^{2k+1}}{(2k+1)!}. \tag{9.82}$$

Using $H^2 = \omega^2 I$, we obtain

$$(iH)^{2k} = (-1)^k \omega^{2k} I, \tag{9.83}$$

$$(iH)^{2k+1} = (-1)^k \omega^{2k} (iH). \tag{9.84}$$

Therefore

$$e^{iH} = \left(\sum_{k=0}^{\infty} \frac{(-1)^k \omega^{2k}}{(2k)!}\right) I + \left(\sum_{k=0}^{\infty} \frac{(-1)^k \omega^{2k}}{(2k+1)!}\right) iH. \tag{9.85}$$

Recognizing the cosine and sine series,

$$e^{iH} = \cos(\omega)\, I + i\frac{\sin(\omega)}{\omega} H. \tag{9.86}$$

Substituting $H = aX + bY + cZ$ yields

$$e^{i(aX+bY+cZ)} = \cos(\omega) I + i\frac{\sin(\omega)}{\omega}(aX + bY + cZ). \tag{9.87}$$

This expression is already a linear combination of unitaries:

$$U = \alpha_0 I + \alpha_1 iX + \alpha_2 iY + \alpha_3 iZ, \tag{9.88}$$

with

$$\alpha_0 = \cos(\omega), \tag{9.89}$$

$$\alpha_1 = \frac{\sin(\omega)}{\omega} a, \quad \alpha_2 = \frac{\sin(\omega)}{\omega} b, \quad \alpha_3 = \frac{\sin(\omega)}{\omega} c. \tag{9.90}$$

We can multiply everything by $-i$ and have the same U redefined up to this global phase:

$$U = -i\alpha_0 I + \alpha_1 X + \alpha_2 Y + \alpha_3 Z, \tag{9.91}$$

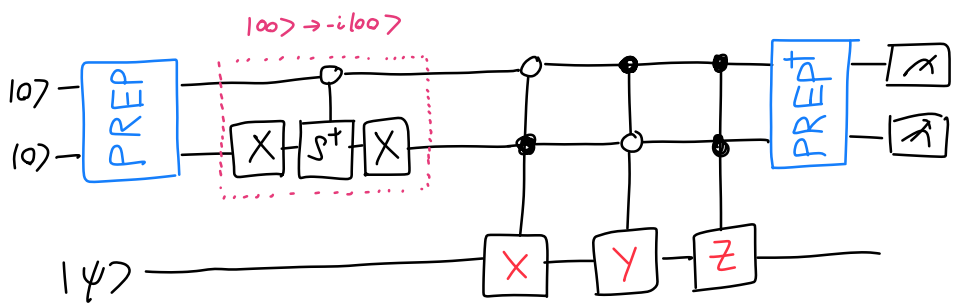

Figure 9.1: Circuit that realize the target operator.

.

We can now write the circuit implementation, using the prepare/select framework. Define

$$\alpha = \sum_{j=0}^{3} |\alpha_j|. \tag{9.92}$$

Introduce an index register encoding $j \in \{0, 1, 2, 3\}$. This means that we need two ancilla qubits. The prepare oracle is defined by

$$\text{PREP}\, |0\rangle^{\otimes 2} = \sum_{j=0}^{3} \sqrt{\frac{|\alpha_j|}{\alpha}}\, |j\rangle. \tag{9.93}$$

The select oracle is

$$\text{SELECT} = -i|00\rangle\langle 00| \otimes I + |01\rangle\langle 01| \otimes X + |10\rangle\langle 10| \otimes Y + |11\rangle\langle 11| \otimes Z. \tag{9.94}$$

The circuit to create the SELECT operator is shown in Fig. 9.1, embedded in the bigger LCU circuit.
When we measure 00 in the ancilla register, we succesfully applied the unitary A/α.

9.4 Hamiltonian Simulation by Qubitization

In Chapter 4 we focused on the Trotter approach for hamiltonian simulation, for historical and simplicity reason. The main outcome was a polynomial scaling algorithm with a runtime scaling of

$$\mathcal{O}\left(\frac{t^{1+1/r}}{\epsilon^{1/r}}\right), \tag{9.95}$$

where r is the order of the Trotter decomposition. We are now in the position to better formalize the LCU approach for the same problem, which show an asymptotically better scaling.

We consider a system Hilbert space $\mathcal{H}_{\text{sys}}$ (e.g. n qubits) and a Hermitian Hamiltonian H acting on it. We assume that H is given in linear-combination-of-unitaries (LCU) form

$$H = \sum_{j=1}^{m} \alpha_j U_j, \qquad \alpha_j \geq 0, \qquad U_j \text{ unitary on } \mathcal{H}_{\text{sys}}. \tag{9.96}$$

Define the normalization constant

$$\alpha := \sum_{j=1}^{m} \alpha_j. \tag{9.97}$$

Then $\|H\| \leq \alpha$, and for every eigenpair

$$H \left|\lambda\right\rangle_{\text{sys}} = \lambda \left|\lambda\right\rangle_{\text{sys}}, \tag{9.98}$$

we have $\lambda/\alpha \in [-1, 1]$.

9.4.1 The Walk Operator

We introduce an index register $\mathcal{H}_{\text{idx}}$ of dimension at least m, with computational basis $\{|j\rangle\}_{j=1}^{m}$. This requires about $\log_2(m)$ qubits assuming a basic logarithmic encoding of the m indices.[4] The global working space will initially be

$$\mathcal{H}_{\text{idx}} \otimes \mathcal{H}_{\text{sys}}. \tag{9.99}$$

We explicitely maintain the labels to clear up possible confusion about the operators and registers.
Define the state

$$\left|\Psi\right\rangle_{\text{idx}} := \sum_{j=1}^{m} \sqrt{\frac{\alpha_j}{\alpha}} \left|j\right\rangle_{\text{idx}}. \tag{9.100}$$

We assume a unitary PREP such that

$$\text{PREP} \left|0\right\rangle_{\text{idx}} = \left|\Psi\right\rangle_{\text{idx}}, \tag{9.101}$$

where we defined $|\Psi\rangle$ for bookeping reasons, as we will utilize this state often in the next.

[4] only later we will introduce an additional ancilla for the Jacobi–Anger LCU construction with is on top of the LCU for the hamiltonian

Define the controlled unitary

$$\text{SELECT} = \sum_{j=1}^{m} |j\rangle\langle j|_{\text{idx}} \otimes U_j^{(\text{sys})}. \tag{9.102}$$

Define the reflection about $|\Psi\rangle$ on the index register:

$$R_\Psi := 2\,|\Psi\rangle\langle\Psi|_{\text{idx}} - I_{\text{idx}}. \tag{9.103}$$

Equivalently,

$$R_\Psi = \text{PREP}\big(2\,|0\rangle\langle 0|_{\text{idx}} - I_{\text{idx}}\big)\text{PREP}^\dagger. \tag{9.104}$$

The walk operator is defined as

$$W := -\big(R_\Psi \otimes I_{\text{sys}}\big)\,\text{SELECT}. \tag{9.105}$$

this is equivalent to

$$W = -\Big(I - 2\,\text{PREP}\,|0\rangle\langle 0|\,\text{PREP}^\dagger \otimes I_{\text{sys}}\Big)\,\text{SELECT}, \tag{9.106}$$

for a full visualization of W in terms of PREP and SELECT. Notice that the W operator does something different than simply block-encode H as before.

Identifying the Two-Dimensional Invariant Subspace. Now we need to characterize the action of the walk operator in a similar way to the amplitude amplification method (Sect. 7.1). This will allow us to see the spectrum of W. Fix an eigenvector $|\lambda\rangle_{\text{sys}}$ of H and define

$$|v\rangle := |\Psi\rangle_{\text{idx}} \otimes |\lambda\rangle_{\text{sys}}\,. \tag{9.107}$$

Clearly, this is only one of the eigenvalues/vectors of H, but we drop the energy index to simplify the notation.

Now we need to find an orthogonal vector, $v^\perp$ such that the action of W on a vector in the 2D subspace $\text{span}\{|v\rangle\,, |v^\perp\rangle\}$ remains confined in this subspace, i.e. $W : \text{span}\{|v\rangle\,, |v^\perp\rangle\} \to \text{span}\{|v\rangle\,, |v^\perp\rangle\}$. To construct a subspace invariant under W, we define

$$|w\rangle := W^\dagger\,|v\rangle\,. \tag{9.108}$$

This choice is done to simplify the evaluation of the matrix elements as $W\,|w\rangle = WW^\dagger\,|v\rangle = |v\rangle$.

Let us define the overlap between the two,

$$c := \langle v|\,w\rangle = \langle v|\,W^\dagger\,|v\rangle\,, \tag{9.109}$$

and perform Gram–Schmidt ortogonalization:

$$|v^\perp\rangle = \frac{|w\rangle - c\,|v\rangle}{\sqrt{1-|c|^2}}. \tag{9.110}$$

It is easy to verify that $\{|v\rangle\,, |v^\perp\rangle\}$ are orthogonal, but it is not obvious that W forms a 2D subspace that have both of them in it.

To do so we explicitly compute the matrix element of W in the ordered basis $\{|v\rangle, |v^\perp\rangle\}$. The plan is to check that W is a unitary matrix in this subspace.
First,

$$W_{0,0} = \langle v| W |v\rangle = \langle \Psi| \langle \lambda| \; W \; |\Psi\rangle |\lambda\rangle . \tag{9.111}$$

Using $W = -(R_\Psi \otimes I)\text{SELECT}$ and $R_\Psi |\Psi\rangle = |\Psi\rangle$, this becomes

$$\langle v| W |v\rangle = - \langle \Psi| \langle \lambda| \text{ SELECT } |\Psi\rangle |\lambda\rangle . \tag{9.112}$$

Expanding $|\Psi\rangle$, explicitating the PREP, and using the definition of SELECT,

$$\langle \Psi| \langle \lambda| \text{ SELECT } |\Psi\rangle |\lambda\rangle = \sum_{j=1}^{m} \frac{\alpha_j}{\alpha} \langle \lambda| U_j |\lambda\rangle = \frac{1}{\alpha} \langle \lambda| H |\lambda\rangle = \frac{\lambda}{\alpha}. \tag{9.113}$$

Next,

$$\langle v| W |v^\perp\rangle = \frac{\langle v| W |w\rangle - c \langle v| W |v\rangle}{\sqrt{1-|c|^2}}. \tag{9.114}$$

Since $W|w\rangle = |v\rangle$,

$$\langle v| W |w\rangle = \langle v\rangle v = 1. \tag{9.115}$$

Moreover,

$$c = \langle v| W^\dagger |v\rangle = \langle v| W |v\rangle , \tag{9.116}$$

which is real in this setting. Therefore,

$$\langle v| W |v^\perp\rangle = \sqrt{1 - \left(\frac{\lambda}{\alpha}\right)^2}. \tag{9.117}$$

Hence,

$$W\Big|_{\mathcal{S}_\lambda} = \begin{pmatrix} \frac{\lambda}{\alpha} & \sqrt{1-\left(\frac{\lambda}{\alpha}\right)^2} \\ -\sqrt{1-\left(\frac{\lambda}{\alpha}\right)^2} & \frac{\lambda}{\alpha} \end{pmatrix}, \tag{9.118}$$

Where $\mathcal{S}_\lambda := \text{span}\{|v\rangle, |v^\perp\rangle\}$. This matrix is made of unit-vectors as rows and columns, the rows and columsn are orthogonal, so it is unitary.
Eigenvalues of W. Define

$$\theta_\lambda := \arccos\left(\frac{\lambda}{\alpha}\right). \tag{9.119}$$

Then

$$W\Big|_{\mathcal{S}_\lambda} = \begin{pmatrix} \cos\theta_\lambda & \sin\theta_\lambda \\ -\sin\theta_\lambda & \cos\theta_\lambda \end{pmatrix} = R_y(-2\theta_\lambda). \tag{9.120}$$

Thus the eigenvalues are

$$e^{\pm i\theta_\lambda} = e^{\pm i \arccos(\lambda/\alpha)}. \tag{9.121}$$

Hamiltonian Simulation via Jacobi–Anger tranformation
We seek to implement

$$e^{-iHt}, \tag{9.122}$$

so what we arrived to before is sligthly off. There is no t but a normalization $1/\alpha$, and most importantly, there is $\arccos(\cdot)$ function appearing in the exponent, with a $\pm$ sign. We need a transformation that map *both* the eigevalues into $e^{-i\lambda t}$.

Notice however that if one is only interested to the eigenvalues then one could apply QPE to W, and classically postprocess the readout $\lambda = \alpha \cos\theta$ then gives an estimate of the Hamiltonian eigenvalue. This is perfectly valid for *eigenvalue estimation* or spectral analysis. This will not give us pure hamiltonian simulation, so we need to manage the arccos in a coherent way.

Suppose we are inputting an eigenstate,

$$e^{-iHt} |\lambda\rangle = e^{-i\lambda t} |\lambda\rangle . \tag{9.123}$$

Writing $\lambda = \alpha \cos\theta_\lambda$, we have

$$e^{-i\lambda t} = e^{-i\alpha t \cos\theta_\lambda}. \tag{9.124}$$

Now we make use of a mathematical tool which precisely allows us to convert a phase into a cosine of that phase: *the Jacobi–Anger expansion*,

$$e^{-iz\cos\theta} = \sum_{m=-\infty}^{\infty} (-i)^m J_m(z)\, e^{im\theta}, \tag{9.125}$$

where $J_m(z)$ are Bessel functions. Notice that the Bessel sequence converge very rapidly as e.g. $J_n(1) = 1/n!$, so the expansion is not very large. Setting $z = \alpha t$, we obtain

$$e^{-i\alpha t\cos\theta} = \sum_{m=-\infty}^{\infty} c_m e^{im\theta}, \qquad c_m = (-i)^m J_m(\alpha t). \tag{9.126}$$

Since

$$W^m |\chi_\lambda^\pm\rangle = e^{\pm im\theta_\lambda} |\chi_\lambda^\pm\rangle , \tag{9.127}$$

an LCU over powers of W approximates e^{-iHt}:

$$\widetilde{U} = \sum_{m=-M}^{M} c_m W^m. \tag{9.128}$$

textbfAncilla Registers and Success Probability.

This route introduce a second LCU step. To implement $\widetilde{U}$ via LCU, an additional Jacobi–Anger ancilla register $\mathcal{H}_{\mathrm{JA}}$ is required. The full register is

$$\mathcal{H}_{\mathrm{JA}} \otimes \mathcal{H}_{\mathrm{idx}} \otimes \mathcal{H}_{\mathrm{sys}}. \tag{9.129}$$

The LCU method prepares

$$|\mathrm{coeff}\rangle = \frac{1}{\sqrt{s}} \sum_{m=-M}^{M} \sqrt{|c_m|}\, |m\rangle , \qquad s = \sum_{m=-M}^{M} |c_m|. \tag{9.130}$$

The implemented operator is $\widetilde{U}/s$, and the success probability is

$$p_{\mathrm{succ}} = \frac{1}{s^2}. \tag{9.131}$$

For Jacobi–Anger coefficients,

$$s = O\big(\sqrt{\alpha t}\big), \tag{9.132}$$

so amplitude amplification is required, introducing additional overhead.

It is a bit outside the scope of this notes to show that the total cost of this procedure

$$O\big(\alpha t \,\mathrm{polylog}(1/\epsilon)\big), \tag{9.133}$$

when success probability amplification is included. Later we will discuss a final, asymptotically optimal method to perform Hamiltonian simulation that avoid this second costly LCU step.

Chapter 10

Quantum Signal Processing

The high-level goal of Quantum Signal Processing (QSP) is to *perform a desired transformation* on a block-encoded Hermitian operator by interleaving a fixed "signal" unitary that encodes the spectral parameter with single-qubit Z-phase rotations.[1] Concretely, if a Hermitian A has been block-encoded so that its normalized eigenvalues play the role of $x \in [-1, 1]$, QSP implements polynomial maps $f(A)$ by synthesizing an $SU(2)$-valued matrix polynomial whose $(0, 0)$ block equals that polynomial. The QSP construction therefore converts *block-encoded values* into controlled polynomial processing of those values, without directly applying non-unitary operations to the data register. The name QSP comes from a different hystorical usage of this mathematical formalism and may or may not make sense for the applications we are going to discuss later.

10.1 QSP in the X-basis

Let $x \in [-1, 1]$ and write $x = \cos\theta$, $\theta = \arccos(x)$. Define the *signal unitary*

$$W(x) \;:=\; e^{i\theta X} \;=\; \cos\theta\, I + i\sin\theta\, X \;=\; \begin{pmatrix} x & i\sqrt{1-x^2} \\ i\sqrt{1-x^2} & x \end{pmatrix}, \tag{10.1}$$

so that the $(0, 0)$ entry of $W(x)$ equals x. In this sense $W(x)$ is a 2×2 block-encoding of the scalar x; when x is replaced by a Hermitian block A/α this becomes the usual QSVT/QSP block-encoding setup. One could also simplify a bit the notation and consider the Y-basis, such that $W(x) = e^{i\theta Y} = R_y(2\cos^{-1}(x))$.
Given phase angles $\Phi = (\phi_0, \phi_1, \ldots, \phi_d) \in \mathbb{R}^{d+1}$ define the QSP product

$$U_d(x, \Phi) \;:=\; e^{i\phi_0 Z}\, W(x)\, e^{i\phi_1 Z}\, W(x) \;\cdots\; W(x)\, e^{i\phi_d Z}. \tag{10.2}$$

Each factor is unitary, so $U_d(x, \Phi) \in SU(2)$ for all x. So we are going to see QSP as a manipulation of a scalar block-encoding of a variable x.

[1] We are discussing the so-called x-basis representation of the signal operator.

Theorem (QSP in the $W(x)$ convention). For every integer $d \geq 0$ and every phase vector $\Phi \in \mathbb{R}^{d+1}$ the QSP product of Eq. 10.2 gives

$$U_d(x, \Phi) \;=\; \begin{pmatrix} P(x) & i\,Q(x)\sqrt{1-x^2} \\ i\,Q(x)\sqrt{1-x^2} & P(x)^* \end{pmatrix}. \tag{10.3}$$

with polynomials $P(x), Q(x) \in \mathbb{C}[x]$,
if and only if

1. $\deg(P) \leq d$ and $\deg(Q) \leq d-1$.
2. Parity constraints: P is even and Q is not even OR P is odd and Q is even.
3. (Normalization / unitarity) For all $x \in [-1, 1]$,

$$|P(x)|^2 + (1-x^2)\,|Q(x)|^2 \;=\; 1. \tag{10.4}$$

10.1.1 Proof of the forward direction

We prove by induction on d that $U_d(x, \Phi)$ admits the claimed P, Q representation with the stated degree/parity and normalization properties. We also need to define that the degree of the constant 0 is -1, $\deg(0) = -1$.
Base case $d = 0$. When $d = 0$, Eq. 10.2 reduces to

$$U_0(x, \phi_0) = e^{i\phi_0 Z} = \begin{pmatrix} e^{i\phi_0} & 0 \\ 0 & e^{-i\phi_0} \end{pmatrix}. \tag{10.5}$$

Set $P(x) = e^{i\phi_0}$ (is a constant) and $Q(x) \equiv 0$. The degree bounds, parity, and normalization hold trivially.
Inductive step. Assume the claim holds for $d-1$, so

$$U_{d-1}(x) = \begin{pmatrix} P_{d-1}(x) & i\,Q_{d-1}(x)\sqrt{1-x^2} \\ i\,Q_{d-1}(x)\sqrt{1-x^2} & P_{d-1}(x)^* \end{pmatrix}, \tag{10.6}$$

with $\deg(P_{d-1}) \leq d-1$, $\deg(Q_{d-1}) \leq d-2$, correct parity, and normalization. From Eq. 10.2, we have that the unitary with d layers is obtained from the U_{d-1} as

$$U_d(x) \;=\; U_{d-1}(x)\,W(x)\,e^{i\phi_d Z}. \tag{10.7}$$

Because U_{d-1}, $W(x)$ and $e^{i\phi_d Z}$ are unitary, their product is unitary and hence must admit the $SU(2)$ canonical parametrization, so the normalization constraint is automatically satisfied. Writing the product explicitly yields recurrence formulas (one simply calculates the left column)

$$\begin{aligned} P_d(x) &= e^{i\phi_d}\big(xP_{d-1}(x) - (1-x^2)Q_{d-1}(x)\big), \\ Q_d(x) &= e^{-i\phi_d}\big(P_{d-1}(x) + xQ_{d-1}(x)\big). \end{aligned} \tag{10.8}$$

From these recurrences degree and parity bounds follow by elementary bookkeeping: multiplying by x increases degree by at most one, and multiplying by $(1-x^2)$ preserves parity while increasing degree by at most two, so $P(x)$ can increase its degree only by 1. This completes the inductive step and proves the forward direction.

10.1.2 Examples: Chebyshev polynomials

It is useful to pause here and see at least one example of useful polynomials that can be exacly produced by QSP. An example are the Chebyshev polynomials.
Definitions. For $x = \cos\theta$ define the Chebyshev polynomials of the first and second kinds by

$$T_d(x) := \cos(d\theta), \qquad U_{d-1}(x) := \frac{\sin(d\theta)}{\sin\theta}. \tag{10.9}$$

Although these are defined trigonometrically, they are polynomials in x (this follows from angle addition and the recurrence below). By inserting $d = 0, 1$ we can find the first two, respectively $T_0 = 1,\ T_1 = x$.
Recurrence. The Chebyshev polynomials satisfy

$$T_{d+1}(x) = 2x\, T_d(x) - T_{d-1}(x). \tag{10.10}$$

Normalization identity. A standard trigonometric identity gives

$$T_d(x)^2 + (1 - x^2)\, U_{d-1}(x)^2 \ = \ 1, \qquad \forall x \in [-1, 1]. \tag{10.11}$$

Hence $(P, Q) = (T_d, U_{d-1})$ is an admissible pair in the QSP sense.
Realization by all-zero phases. If we set all phases equal to zero then

$$U_d(x, \mathbf{0}) = W(x)^d = e^{id\theta X}, \tag{10.12}$$

and the $(0, 0)$ entry equals $\cos(d\theta) = T_d(x)$. The off-diagonal carries $\sin(d\theta) = \sin\theta\, U_{d-1}(x)$, so the Chebyshev pair is realized by the trivial phase list $\Phi = \mathbf{0}$ (up to the indexing convention for how many W factors one includes).
Chebyshev polynomials are important beyond this example: the roots of $T_d(x)$, which are also called Chebyshev nodes, are very important sets in mathematics and are used as optimal basis for optimizing polynomial interpolation. Many QSP constructions can be interpreted as controlled deformations of the Chebyshev solution via insertion of carefully chosen phases.

10.1.3 Sketch of the backward direction

The converse direction to prove claims that every admissible pair (P, Q) is produced by some phase list. This direction is constructive and most naturally proved by a *degree-reduction* (peeling) algorithm. We present the base case and the key interference idea used in the "peeling" step.
Base case. If $\deg(P) = 0$ then $P(x) \equiv c$ is constant, and from $\deg(Q) \leq -1$ we have $Q \equiv 0$. Normalization immediately gives $|c| = 1$, so $c = e^{i\phi_0}$ for some real ϕ_0. Thus

$$\begin{pmatrix} P(x) & 0 \\ 0 & P(x)^* \end{pmatrix} = e^{i\phi_0 Z}, \tag{10.13}$$

which is exactly the QSP product for $d = 0$. However this base step is already more complicated because one needs to prove that one can find a d-dimensional array of phases that can yield the constant poly. This seems challenging since d matrices $W(x)$ appears in Eq. 10.2, each of them seems to carry a multiplication bt x.

Key interference identity (engineered cancellation). The elementary identity

$$Z\,W(x)\,Z \;=\; W(x)^{-1} \tag{10.14}$$

(deriving from $ZXZ = -X$) is the mechanism that allows constructive phase synthesis via interference. In particular

$$W(x)\left(e^{i\frac{\pi}{2}Z}\right)W(x)\left(e^{-i\frac{\pi}{2}Z}\right) \;=\; W(x)\,(iZ)\,W(x)\,(-iZ) \;=\; W(x)ZW(x)Z \;=\; I, \tag{10.15}$$

so an alternating choice of $\pm\frac{\pi}{2}$ phases yields exact pairwise cancellations of adjacent $W(x)$ layers (up to global phase).

This is the toy cancellation can be used as intuition for the full demonstration: by choosing a final phase appropriately one can effect destructive interference and thereby reduce degree by one; iterating produces a full phase decomposition. We omit the full mathematical details here that can be found in Motlagh & Wiebe, "Generalized Quantum Signal Processing", arXiv:2308.01501 (2023).

10.1.4 Constructing a simple filter with QSP

Consider first the trivial phase sequence $\vec{\phi} = (0, 0)$. Let us work in the θ degree of freedom, i.e $\theta = \sin^{-1}(x)$ In this case the QSP unitary reduces to the bare signal,

$$U_{\vec{\phi}}(\theta) = W(\theta), \tag{10.16}$$

so no processing is performed.
If we prepare the input qubit in the state $|0\rangle$ and examine the probability that it remains in $|0\rangle$ after applying $U_{\vec{\phi}}(\theta)$, we obtain

$$p(\theta) = \left|\,\langle 0|\,U_{\vec{\phi}}(\theta)\,|0\rangle\,\right|^2. \tag{10.17}$$

For the unprocessed case this evaluates to

$$p(\theta) = \cos^2\left(\frac{\theta}{2}\right), \tag{10.18}$$

which is the simple co-sinusoidal dependence on the signal angle.

Now consider a nontrivial phase sequence. For example, take

$$\vec{\phi} = \left(\frac{\pi}{2}, -\eta, 2\eta, 0, -2\eta, \eta\right), \qquad \eta = \frac{1}{2}\cos^{-1}\left(-\frac{1}{4}\right). \tag{10.19}$$

With these phases, the QSP unitary produces a modified response function. The survival probability becomes

$$p(\theta) = \left|\,\langle 0|\,U_{\vec{\phi}}(\theta)\,|0\rangle\,\right|^2 = \frac{1}{8}\cos^2\left(\frac{\theta}{2}\right)\left[3\cos^8\left(\frac{\theta}{2}\right) - 15\cos^6\left(\frac{\theta}{2}\right) + 35\cos^4\left(\frac{\theta}{2}\right) - 45\cos^2\left(\frac{\theta}{2}\right) + 30\right]. \tag{10.20}$$

For small θ this behaves as

$$p(\theta) \approx 1 - \frac{5}{8}\left(\frac{\theta}{2}\right)^6, \tag{10.21}$$

which shows significantly flatter behavior near $\theta = 0$ compared to the simple cosine case.

The qualitative effect of such a phase sequence is clear: the output remains close to $|0\rangle$ for a wide range of small signal angles, followed by a sharp transition near a particular angle. In other words, QSP applies a trnaformation that can be seen as a filter with enhanced sensitivity around specific values of θ.
Sequences of this type are closely related to composite pulse techniques developed in nuclear magnetic resonance and magnetic resonance imaging , where carefully designed phase patterns are used to increase robustness or enhance contrast. The example above is structurally similar to the well-known "BB1" composite pulse sequence.

10.1.5 Basis read-out for real-valued polynomial targets

We finally address a practical issue concering the extraction of the signal. The QSP theorem fundamentally describes a family of *SU(2)-valued matrix polynomials*

$$U_d(x, \vec{\phi}) = \begin{pmatrix} P(x) & iQ(x)\sqrt{1-x^2} \\ iQ(x)\sqrt{1-x^2} & P(x) \end{pmatrix}, \tag{10.22}$$

where P and Q satisfy the degree, parity, and normalization conditions

$$|P(x)|^2 + (1-x^2)|Q(x)|^2 = 1 \qquad \forall x \in [-1, 1]. \tag{10.23}$$

This matrix representation is the intrinsic output of QSP. To obtain a scalar polynomial from it, one must choose a basis vector $|\psi\rangle$ and define

$$\mathrm{Poly}(x) := \langle\psi| U_d(x, \vec{\phi}) |\psi\rangle . \tag{10.24}$$

If we extract the $(0, 0)$ matrix element, we obtain

$$\mathrm{Poly}(x) = \langle 0| U_d(x, \vec{\phi}) |0\rangle = P(x). \tag{10.25}$$

At the endpoints $x = \pm 1$, the signal unitary satisfies

$$W(x = \pm 1) = \pm I, \tag{10.26}$$

since $\sqrt{1-x^2} = 0$. Consequently, the entire QSP sequence collapses to a single Z-rotation,

$$U_d(\pm 1, \vec{\phi}) = e^{i\Theta Z} \quad \text{(up to global phase)}, \tag{10.27}$$

for some real angle Θ depending on the phase sequence.
Therefore,

$$\mathrm{Poly}(\pm 1) = \langle 0| e^{i\Theta Z} |0\rangle = e^{i\Theta}, \tag{10.28}$$

and hence

$$|\mathrm{Poly}(\pm 1)| = 1. \tag{10.29}$$

This shows that when extracting the $(0,0)$ entry, the achievable scalar polynomials must satisfy the additional endpoint constraint $|\mathrm{Poly}(\pm 1)| = 1$.

If instead one defines

$$\mathrm{Poly}(x) = \langle +| \, U_d(x, \vec{\phi}) \, |+\rangle \,, \tag{10.30}$$

then a direct computation gives

$$\mathrm{Poly}(x) = \mathrm{Re}(P(x)) + i \, \mathrm{Re}Q(x)\sqrt{1-x^2}. \tag{10.31}$$

In this case, evaluating at $x = \pm 1$ yields

$$\mathrm{Poly}(\pm 1) = \mathrm{Re}(P(\pm 1)), \tag{10.32}$$

which is not constrained to have unit modulus. In the following our target will be directly complex valued so this problem do not arise.

10.2 Hamiltonian Simulation using QSP

We now connect the QSP theorem in the σ_y basis with the qubitized walk operator arising from a block-encoding of a Hamiltonian. We assume that the signal unitary

$$W(x) = \begin{pmatrix} x & \sqrt{1-x^2} \\ -\sqrt{1-x^2} & x \end{pmatrix}, \tag{10.33}$$

which is a small modification of the previus definition in the in the σ_x that matches the R_Y rotation found for the walk operator in Sect. 9.4.1.

The goal of Hamiltonian simulation is to implement

$$e^{-iHt}. \tag{10.34}$$

On an eigenstate $|\lambda\rangle$ this acts as

$$e^{-iHt} \, |\lambda\rangle = e^{-i\lambda t} \, |\lambda\rangle \,. \tag{10.35}$$

Since $\lambda = \alpha x$, we rewrite

$$e^{-i\lambda t} = e^{-i\alpha t x}. \tag{10.36}$$

Therefore Hamiltonian simulation reduces to implementing the scalar function

$$f(x) = e^{-i\alpha t x} \qquad \text{for } x \in [-1, 1]. \tag{10.37}$$

By the QSP theorem, if we can approximate $f(x)$ by a polynomial $P_d(x)$ of degree d satisfying $|P_d(x)| \leq 1$ on $[-1, 1]$, then there exists a QSP phase sequence implementing that transformation coherently on every eigenvalue sector:

$$x \mapsto P_d(x) \quad \Longrightarrow \quad \lambda \mapsto P_d(\lambda/\alpha). \tag{10.38}$$

Jacobi–Anger as a approximation metric. To understand the degree required to approximate $f(x)$, it is useful to express the function in angular form. Let

$$x = \cos\theta. \tag{10.39}$$

Then

$$e^{-i\alpha t x} = e^{-i\alpha t \cos\theta}. \tag{10.40}$$

We repeat for convenience the Jacobi–Anger identity, which states

$$e^{-iz\cos\theta} = \sum_{m=-\infty}^{\infty} (-i)^m J_m(z)\, e^{im\theta}. \tag{10.41}$$

Setting $z = \alpha t$ gives

$$e^{-i\alpha t\cos\theta} = \sum_{m=-\infty}^{\infty} (-i)^m J_m(\alpha t)\, e^{im\theta}. \tag{10.42}$$

Using

$$\cos(m\theta) = T_m(\cos\theta) = T_m(x), \tag{10.43}$$

this becomes a Chebyshev expansion

$$e^{-i\alpha t x} = J_0(\alpha t) + 2\sum_{m=1}^{\infty} (-i)^m J_m(\alpha t)\, T_m(x). \tag{10.44}$$

Truncating at degree M yields a polynomial

$$P_M(x) = J_0(\alpha t) + 2\sum_{m=1}^{M} (-i)^m J_m(\alpha t)\, T_m(x), \tag{10.45}$$

with uniform approximation error bounded by the Bessel tail

$$\|e^{-i\alpha t x} - P_M(x)\|_\infty \leq 2\sum_{m=M+1}^{\infty} |J_m(\alpha t)|. \tag{10.46}$$

Scaling with αt precision ϵ. It is illuminating to understand intuitively why the optimal polynomial degree scales as

$$d = \Theta(\alpha t + \log(1/\epsilon)). \tag{10.47}$$

Consider the target function

$$f(x) = e^{-i\alpha t x}, \qquad x \in [-1, 1]. \tag{10.48}$$

This function oscillates in x with frequency proportional to αt. Indeed,

$$\frac{d}{dx} e^{-i\alpha t x} = -i\alpha t\, e^{-i\alpha t x}, \tag{10.49}$$

so its rate of change has magnitude αt. As αt increases, the function oscillates more rapidly across the interval $[-1, 1]$. Equivalently, since the total time t needs to be rescales int the range $[-1, 1]$, this translates into a number of oscillation inside the range that scales with the total time.

A degree-d polynomial can exhibit at most d oscillations across an interval. Therefore, if $f(x)$ oscillates roughly αt times over $[-1, 1]$, any polynomial that approximates it uniformly must satisfy

$$d \sim \alpha t. \tag{10.50}$$

A more precise view arises from the angular substitution $x = \cos\theta$, under which

$$e^{-i\alpha t x} = e^{-i\alpha t \cos\theta}. \tag{10.51}$$

The Jacobi–Anger expansion shows that this function decomposes into Fourier modes

$$e^{-i\alpha t \cos\theta} = \sum_{m=-\infty}^{\infty} (-i)^m J_m(\alpha t)\, e^{im\theta}. \tag{10.52}$$

The Bessel coefficients $J_m(\alpha t)$ are largest when $m \approx \alpha t$ and decay rapidly for $m > \alpha t$. Thus the function has effective Fourier bandwidth of order αt in θ. Since

$$\cos(m\theta) = T_m(\cos\theta), \tag{10.53}$$

each Fourier mode corresponds to a Chebyshev polynomial $T_m(x)$ of degree m. Therefore the Chebyshev expansion of $e^{-i\alpha t x}$ necessarily involves degrees up to

$$m \sim \alpha t. \tag{10.54}$$

Beyond this intrinsic bandwidth, the Chebyshev/Bessel coefficients decay exponentially in m. Consequently, truncating the expansion at degree

$$d = \alpha t + r \tag{10.55}$$

produces an approximation error that scales like e^{-cr} for some constant $c > 0$. To achieve precision ϵ, it suffices to choose

$$r = O(\log(1/\epsilon)). \tag{10.56}$$

This exponential tail decay is responsible for the additive $\log(1/\epsilon)$ term in the optimal degree. Therefore the optimal polynomial degree is

$$d = \Theta(\alpha t + \log(1/\epsilon)). \tag{10.57}$$

Resulting runtime. Since QSP implements a degree-d polynomial using d applications of the walk primitive, the query complexity for Hamiltonian simulation is

$$O(\alpha t + \log(1/\epsilon)). \tag{10.58}$$

The term αt reflects the physical time evolution and is unavoidable, while the $\log(1/\epsilon)$ term arises from exponential suppression of the Chebyshev tail.

In summary, qubitization converts Hamiltonian eigenvalues into the scalar variable $x = \lambda/\alpha$ inside a two-dimensional SU(2) block. QSP then implements an optimal-degree polynomial approximation to $e^{-i\alpha t x}$, yielding Hamiltonian simulation with optimal query complexity.

10.2.1 Remarks on QSP phase synthesis

Although the QSP theorem guarantees the existence of a phase sequence for any admissible polynomial, early constructive methods were numerically unstable.

There is no simple closed-form rule for the QSP phases for a general polynomial such as the truncated Jacobi–Anger expansion. Instead, one uses a recursive SU(2) polynomial factorization algorithm (or a stable numerical synthesis routine) to compute the phase sequence.

In the original implementations of QSP (Low–Chuang 2016–2017), practical phase synthesis was limited to degrees on the order of $d \sim 30$.
Subsequent algorithmic advances dramatically improved stability. In particular, Haah (2019) introduced a robust product decomposition method for unitary polynomial factorization, and later refinements by Wang–Dong–Lin (2022) and Motlagh–Wiebe (2023) clarified the structure and uniqueness of symmetric phase sequences. These developments enabled numerically stable synthesis of QSP phase sequences with degrees as large as

$$d \sim 10^6 \text{ to } 10^7, \tag{10.59}$$

representing several orders of magnitude improvement over early implementations.

Importantly, this dramatic increase in achievable degree reflects improvements in classical phase-synthesis algorithms rather than changes to the underlying QSP theorem, whose existence guarantees were always general.

Chapter 11

Quantum Walks

Work in progress..

11.1 Classical random walks on graphs

11.1.1 Graphs and transition matrices

Let $G = (V, E)$ be an undirected graph with $|V| = N$ vertices. A random walk on G is specified by a *transition matrix* $P \in \mathbb{R}^{N \times N}$ such that $P_{x,y} \geq 0$ for all $x, y \in V$ and

$$\sum_{y \in V} P_{x,y} = 1 \tag{11.1}$$

for all x (row-stochastic).
We interpret $P_{x,y}$ as the probability of transitioning from vertex x to vertex y in one step. In many examples P is supported on edges, i.e. $P_{x,y} = 0$ whenever $(x, y) \notin E$.
A probability distribution over vertices is a vector $v \in \mathbb{R}^N$ with $v_x \geq 0$ and $\sum_x v_x = 1$. Evolving the walk corresponds to left-multiplication: after k steps the distribution is $v^{(k)} = v^{(0)} P^k$.

We will use the following qualitative form of Perron–Frobenius for nonnegative matrices.
Theorem (Perron–Frobenius, informal form). Let $A \in \mathbb{R}^{N \times N}$ be entrywise nonnegative and *irreducible* (the graph connected, i.e not made of disjoint sets). Then its spectral radius $r = \max_i |\lambda_i(A)|$ is an eigenvalue of A with a strictly positive (right) eigenvector. Moreover, if A is also *aperiodic* (equivalently, the associated Markov chain is aperiodic), then r is simple (i.e multiplicity one) and $|\lambda_i(A)| < r$ for all other eigenvalues.

For a Markov chain, we apply this to $A = P$. Since P is stochastic, 1 is always an eigenvalue (because $P\mathbf{1} = \mathbf{1}$ in the column-stochastic convention, or $\mathbf{1}^\top P = \mathbf{1}^\top$ in the row-stochastic convention).
Assume from now on that the chain is *irreducible* and *aperiodic*. Then there is a unique stationary distribution π satisfying $\pi = \pi P$, and all other eigenvalues have magnitude < 1. In particular, we can order the real eigenvalues as

$$1 = \lambda_1 \geq \lambda_2 \geq \cdots \geq \lambda_N > -1, \tag{11.2}$$

where the strict inequality on the right is guaranteed by aperiodicity (for many symmetric walks, bipartiteness is exactly what would allow an eigenvalue -1).
We define the (additive) *spectral gap* as

$$\delta \;:=\; 1 - \max\{|\lambda_2|, |\lambda_N|\}. \tag{11.3}$$

11.1.2 Stationary distribution and the d-regular case

A particularly important case is a random walk on a d-regular undirected graph, where each vertex has degree d and

$$P_{x,y} = \begin{cases} \frac{1}{d}, & (x,y) \in E, \\ 0, & \text{otherwise.} \end{cases} \tag{11.4}$$

In this case the uniform distribution is stationary:

$$\pi \;=\; \frac{1}{N} \sum_{x \in V} e_x, \tag{11.5}$$

where $\{e_x\}$ is the standard basis. Indeed, the y-th component of πP is

$$(\pi P)_y \;=\; \sum_{x \in V} \pi_x P_{x,y} \;=\; \frac{1}{N} \sum_{x:(x,y)\in E} \frac{1}{d} \;=\; \frac{1}{N} \cdot \frac{\deg(y)}{d} \;=\; \frac{1}{N} \;=\; \pi_y, \tag{11.6}$$

using $\deg(y) = d$.

11.1.3 Convergence to equilibrium

To quantify mixing, we measure distance to stationarity using *total variation distance*:

$$\|v - \pi\|_{\mathrm{TV}} \;:=\; \frac{1}{2} \sum_{x \in V} |v_x - \pi_x|. \tag{11.7}$$

Assume for simplicity that P is diagonalizable with an orthonormal eigenbasis (this holds, for example, when P is symmetric, i.e. $P_{x,y} = P_{y,x}$). Let $\{v_i\}_{i=1}^N$ be orthonormal eigenvectors with $v_1 = \pi$ (in the d-regular case, $v_1 = \frac{1}{\sqrt{N}}\mathbf{1}$) and $v_i P = \lambda_i v_i$. Expand the initial distribution as

$$v^{(0)} \;=\; \pi \;+\; \sum_{i=2}^{N} a_i v_i. \tag{11.8}$$

Then after k steps,

$$v^{(k)} \;=\; v^{(0)} P^k \;=\; \pi \;+\; \sum_{i=2}^{N} a_i \lambda_i^k v_i, \tag{11.9}$$

so every component orthogonal to stationarity contracts by a factor $|\lambda_i|^k$.
Using $\max_{i \geq 2} |\lambda_i| = 1 - \delta$, we get the standard geometric decay form

$$\|v^{(k)} - \pi\|_{\mathrm{TV}} \;\leq\; C(v^{(0)})\,(1-\delta)^k \;\leq\; C(v^{(0)})\, e^{-\delta k}, \tag{11.10}$$

for some constant $C(v^{(0)})$ depending on the initial state (for many settings one can take $C(v^{(0)}) \leq 1/2$ up to a change of norm; the key point for us is the $\exp(-\delta k)$ decay). Thus, to achieve $\|v^{(k)} - \pi\|_{\mathrm{TV}} \leq \varepsilon$, it suffices to take

$$k \;\gtrsim\; \frac{1}{\delta}\log\Big(\frac{1}{\varepsilon}\Big). \tag{11.11}$$

11.1.4 From mixing to hitting time

We consider the following computational task. We are given access to a graph, but: (i) We do not know the full structure of the graph a priori, (ii) We can only explore the graph locally: when located at a vertex x, we can query its neighbors, we can move along edges. It is important to understand this setting: in toy problem we are given all the vertices labels, so searching seems pointless since we are given already the full graph data.

Let $M \subseteq V$ be a set of "marked" vertices, with $|M| = m$. In the d-regular case, under the uniform stationary distribution we have

$$\pi(M) \;=\; \sum_{x\in M} \pi_x \;=\; \frac{m}{N}. \tag{11.12}$$

If the walk is within total variation ε of stationarity, then the probability of being in M differs from $\pi(M)$ by at most ε:

$$\big|v^{(k)}(M) - \pi(M)\big| \;\leq\; \|v^{(k)} - \pi\|_{\mathrm{TV}} \;\leq\; \varepsilon. \tag{11.13}$$

A convenient choice is to mix until ε is on the order of the stationary mass of the marked set, e.g. $\varepsilon \approx \pi(M) = m/N$. Then a sample from $v^{(k)}$ has marked probability

$$v^{(k)}(M) \;\geq\; \frac{m}{N} - \varepsilon \;\approx\; \Theta\Big(\frac{m}{N}\Big). \tag{11.14}$$

Once we are in this regime, repeated independent "trials" (mix, sample, check membership in M) succeed after about N/m trials in expectation. Each trial costs a mixing time of order $\frac{1}{\delta}\log\big(\frac{1}{\varepsilon}\big)$, and with $\varepsilon \approx m/N$ this is $\frac{1}{\delta}\log\big(\frac{N}{m}\big)$. Therefore a simple (not necessarily optimal) estimate for the overall classical cost to find a marked vertex is

$$T_{\mathrm{hit}} \;\approx\; \frac{N}{m}\cdot\frac{1}{\delta}\log\Big(\frac{N}{m}\Big), \tag{11.15}$$

where the $\log(N/m)$ originates from the accuracy requirement in mixing (we want stationarity error small compared to the marked mass), and the $1/\delta$ is the intrinsic spectral mixing scale. This classical scaling will be the baseline we compare against when introducing quantum walk search.