REVISIONS						
REV.	FAB CAD FILE	NATIVE DRAWING FILE	NATIVE CAD FILE	DESCRIPTION	DATE	APPROVED
1	VS0006-1.STEP	VS0006-1.SLDDRW	VS0006-1.SLDPRT	Initial Prototype Release.	8/11/16	TB/DT
A	VS0006-A.STEP	VS0006-A.SLDDRW	VS0006-A.SLDPRT	Production release. Added locating slot. Added part number and revision dot pattern. Changed top surface from textured to high gloss.	9/19/16	TB/DT
B	VS0006-B.STEP	VS0006-B.SLDDRW	VS0006-B.SLDPRT	Changed top surface from high gloss to textured. Updated revision dot pattern.	9/20/16	TB/DT

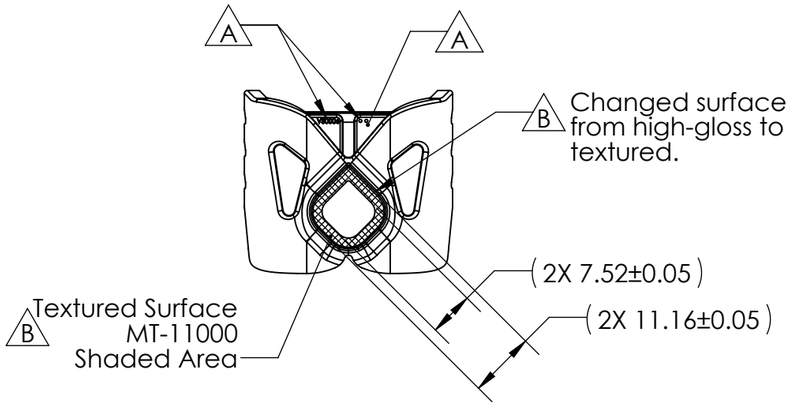

Top View

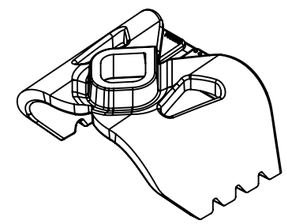

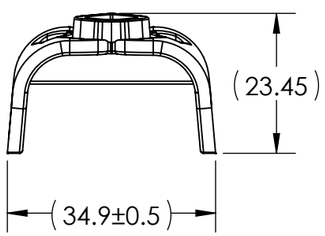

Front View

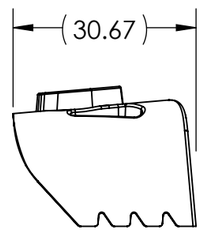

Right View

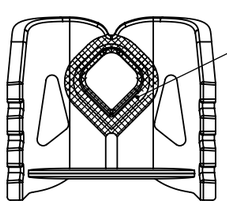

Notes:

1. All dimensions are reference only. 3D CAD file is the master document.
2. Dimensions in Millimeters
3. All materials and finishes must be RoHS compliant.
4. Material: ACRYLIC PLEXIGLAS V052-100
5. Color: Optically Clear
6. Mold Texture (unless otherwise noted): High Gloss
7. Tolerances: ISO 2768-1 M (unless otherwise noted)
   Parting line mismatch must not exceed .005 [.13mm].
8. Mold design must be approved by VeriSolutions prior to mold fabrication.
9. Draft is maximum allowable.
10. Trim gate to flush or subflush.

THIRD ANGLE PROJECTION

PROPRIETARY AND CONFIDENTIAL
THE INFORMATION CONTAINED IN THIS DRAWING IS THE SOLE PROPERTY OF DT Engineering Associates, Inc. ANY REPRODUCTION IN PART OR AS A WHOLE WITHOUT THE WRITTEN PERMISSION OF DT Engineering Associates, Inc. IS PROHIBITED.

CUSTOMER: VeriSolutions	DRAWN BY: T. Burkhard	DATE: 8/11/16	TITLE: VeriConnect Logo Lightpipe
PROGRAM NAME: VeriConnect	ENGINEER: T. Burkhard	DATE: 8/11/16	
NEXT ASSEMBLY: VeriConnect	CHECKED: D. Tostenson	DATE: 8/11/16	DWG. NO. VS0006
TOLERANCES: See Notes	APPROVED: S. Justice	DATE: 8/11/16	SCALE: 1:1 / WEIGHT: / SHEET 1 OF 1

DT ENGINEERING ASSOCIATES INC.
920 Reserve Dr. Suite 190
Roseville, CA95678
Tel. 916 474-5167
Fax 916 749-3793
www.dtengineer.com

SIZE B | **REVISION B**