| REVISIONS | | | | | | |
|---|---|---|---|---|---|---|
| REV. | FAB CAD FILE | NATIVE DRAWING FILE | NATIVE CAD FILE | DESCRIPTION | DATE | APPROVED |
| 1 | VS0004-1.STEP | VS0004-1.SLDDRW | VS0004-1.SLDPRT | Initial Prototype Release. | 7/27/2016 | TB/DT |
| 2 | VS0004-2.STEP | VS0004-2.SLDDRW | VS0004-2.SLDPRT | Modified color specification. | 8/9/2016 | TB/DT |
| A | VS0004-A.STEP | VS0004-A.SLDDRW | VS0004-A.SLDPRT | Production Release. 2X modified snap hooks. 5X added rib height tolerance. 4X modified board locating ribs. 4X added locating ribs. | 9/16/2016 | TB/DT |

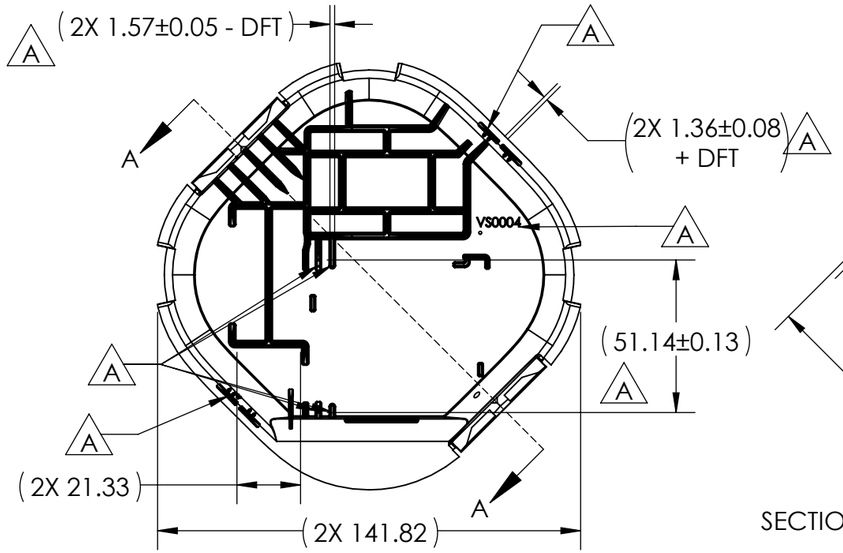


Top View
No Texture this side

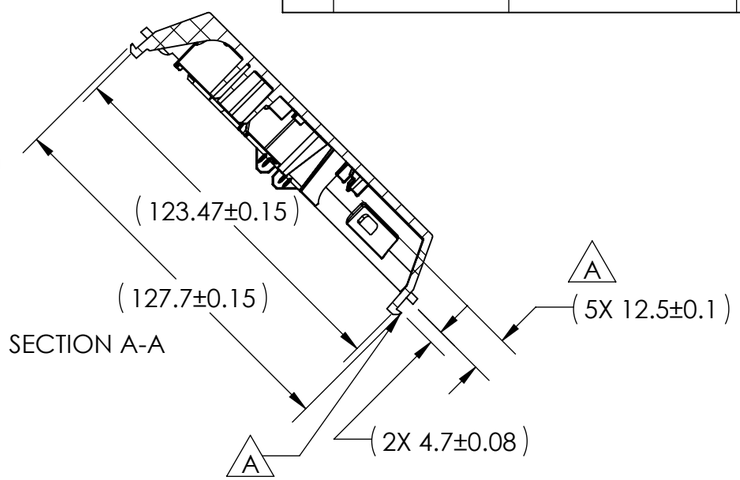


SECTION A-A

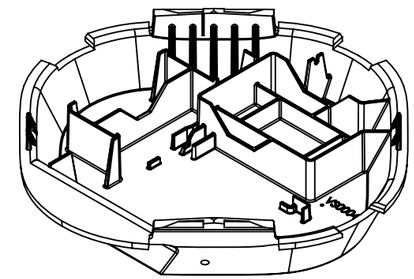

Isometric View

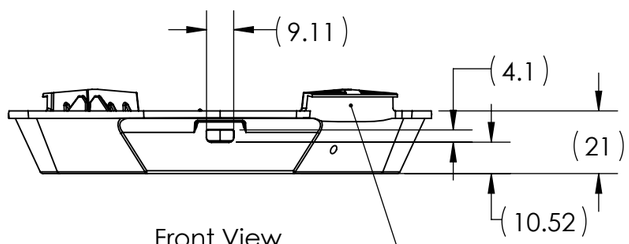


Front View

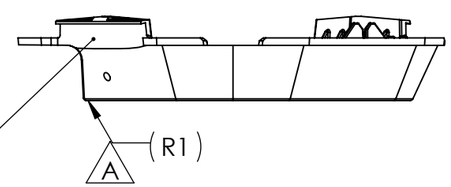


Right View

No Texture

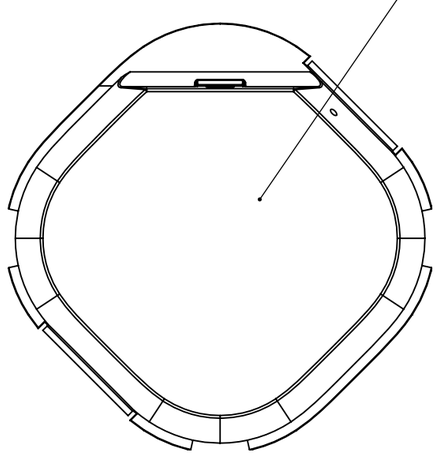

Bottom View

Notes:

1. All dimensions are reference only. 3D CAD file is the master document.
2. Dimensions in Millimeters
3. All materials and finishes must be RoHS compliant.
4. Material: Makrolon 2407-550115
5. Color:
   Match color chip provided by VeriSolutions.
   Reference PANTONE 11-0602 TCX Snow White
6. Mold Texture (unless otherwise noted): MT-11000, All Cavity Surfaces.
7. All cavity surfaces are class A.
8. Tolerances: ±0.15mm (unless otherwise noted)
   Parting line mismatch must not exceed 0.13mm.
9. Mold design must be approved by VeriSolutions prior to mold fabrication.
10. Draft is maximum allowable.
11. Trim gate to flush or subflush.

THIRD ANGLE PROJECTION

**PROPRIETARY AND CONFIDENTIAL**
THE INFORMATION CONTAINED IN THIS DRAWING IS THE SOLE PROPERTY OF DT Engineering Associates, Inc. ANY REPRODUCTION IN PART OR AS A WHOLE WITHOUT THE WRITTEN PERMISSION OF DT Engineering Associates, Inc. IS PROHIBITED.

| | | | |
|---|---|---|---|
| CUSTOMER: VeriSolutions | DRAWN BY: T. Burkhard | DATE: 7/27/16 | TITLE: VeriConnect Bottom Cover |
| PROGRAM NAME: VeriConnect | ENGINEER: T. Burkhard | DATE: 7/27/16 | |
| NEXT ASSEMBLY: VeriConnect | CHECKED: D. Tostenson | DATE: 7/27/16 | DWG. NO. VS0004 |
| TOLERANCES: See Notes | APPROVED: S. Justice | DATE: 7/27/16 | SCALE: 1:2 / WEIGHT: / SHEET 1 OF 1 |

DT ENGINEERING ASSOCIATES INC.
920 Reserve Dr. Suite 190
Roseville, CA95678
Tel. 916 474-5167
Fax 916 749-3793
www.dtengineer.com

SIZE B | REVISION A