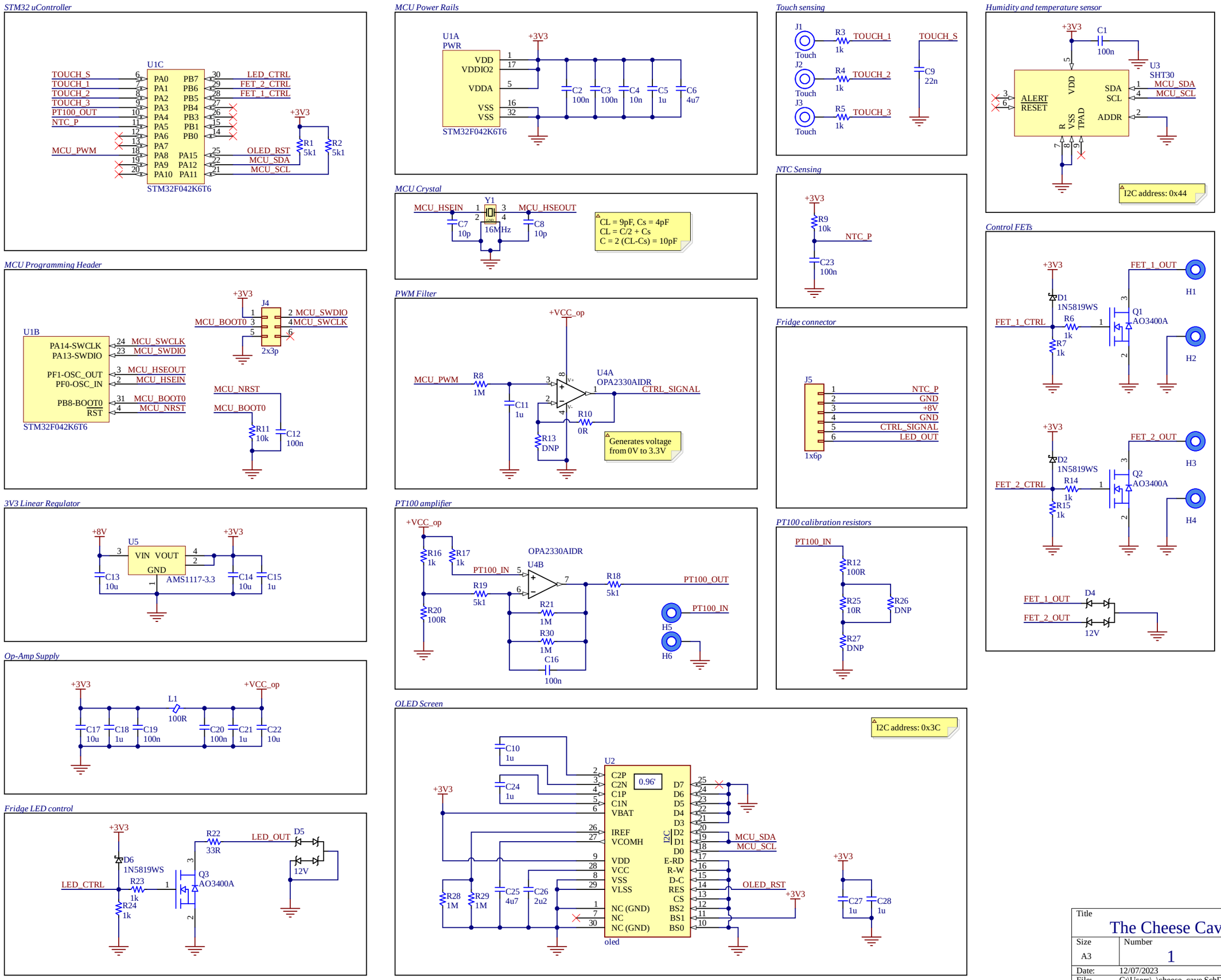

Title		
The Cheese Cave		
Size: A3	Number: 1	Revision: A
Date: 12/07/2023		Sheet 1 of 1
File: C:\Users\..\cheese_cave.SchDoc		Drawn By: guimpt