Spectral Estimation for Hydrogen Line Detection in the Milky Way

No Author Given

No Institute Given

Abstract. The detection of the 1.420 GHz hydrogen line emitted by the Milky Way shows significant challenges due to the weak nature of the signal and the presence of background noise. This study evaluates various spectral estimation techniques to enhance the detectability of this signal. A radio telescope system composed by a 2.5m̃ parabolic dish, RF conditioning stages with 70d̃B gain, and a digital receiver is developed to capture the astronomical signal. Both classical (Bartlett, Welch, and Correlogram) and parametric (Burg and Yule-Walker) Power Spectral Density (PSD) estimation methods are implemented and compared using real data captured in Quito, Ecuador. Results indicate that, while parametric methods offer high spectral resolution, they are less effective at noise suppression. The correlogram method achieves the best balance, offering an improvement of 7.62d̃B between signal and noise, making it the most suitable for hydrogen line detection.

Keywords: PSD · Periodogram · Hydrogen Line · Correlogram · Autoregressive PSD

1 Introduction

The hydrogen line is a radio signal resulting from a transition experienced by a neutral hydrogen atom between two specific energy levels, namely from a higher energy level to a lower energy level [1–3]. In the case of the hydrogen line, this radio signal is found at 1420.405 MHz, i.e. a signal with a wavelength of 21c̃m.

By studying the hydrogen line, its shape, and spectral location, one can obtain diverse information about the region in which it is generated and the distribution of hydrogen, as in the case of the Milky Way.

Likewise, by means of the detection of radio waves, it is possible to detect different astronomical structures or celestial bodies such as pulsars that emit radio signals between 100 MHz and 8500 MHz [4].

This is why starting the design of a radio telescope for hydrogen line detection is the basis for future explorations, given the frequency stability of the hydrogen line, unlike other astronomical bodies.

In [5], A Commercial off-the-shelf (COTS) scheme based on Software Defined Radio (SDR) for hydrogen line detection is presented. A difference of 1d̃B to 2d̃B is presented between the hydrogen line signal and the background noise.

In [6, 7], the design of the conditioning stage and antenna of a radio telescope for hydrogen line detection is presented. Between the conditioning stage and the antenna, the scheme proposed by the authors has a gain of 60d̃B.

In [8], a 300M̃Hz bandwidth radio astronomy system is presented. With 12-bit ADC and GPU processing.

This study aims to determine which spectral estimation technique (classical: direct/indirect or parametric) improves the detection of the hydrogen line of the Milky Way, i.e. the emitted radio signal.

The proposed system for the COTS radio telescope of this study presents a higher gain between the hydrogen line radio signal and the background noise level. This is due to the conditioning stage and the use of spectral estimation techniques.

The following sections of the article are organized as follows: Section 2, presents the configuration of the radio telescope (antenna, conditioning and reception) and describes the utilized spectral estimation techniques. In the Section 3, the results obtained and the relation between main and secondary lobe of the PSD are presented. Finally, in Section 4, conclusions and future work are presented.

2 Materials and Methods

In this study, different spectral estimation techniques are tested in order to highlight the radio signals emitted by astronomical structures, in this case with the purpose of detecting the hydrogen line of the Milky Way ($1.420GHz$).

Fig. 1, shows the block diagram of the components used for the radio telescope, signal acquisition and spectral estimation.

2.1 Antenna

To detect the hydrogen line of the Milky Way, a 2.5-m-diameter parabolic plate is used as a reflector structure, while a horn antenna composed of two cylindrical sections serves as a feeder (see, Fig. 2). A gain between the feeder and the reflector is established around ≈30 dB with an effective opening $A_e \approx 3\ m^2$ [9]. Details of the feeder design and testing will be reported in a further article.

2.2 RF Conditioning

The perceived flux density (S) on the ground from the hydrogen line is around 0.1 - 10 Jansky (Jy), i.e. $0.1 \times 10^{-26}\ W/m^2Hz$ or $10 \times 10^{-26}\ W/m^2Hz$, this based on multiple observations [2, 10]. When considering the A_e and the bandwidth (B) of 1 MHz, is obtained the estimated receiving power

$$P_{Rx} = A_e \times S \times B \approx 0.3 - 30 \times 10^{-20}\ W$$

where, P_{Rx} is the received power from the feeder, this is equivalent to -175 dBm and -155 dBm.

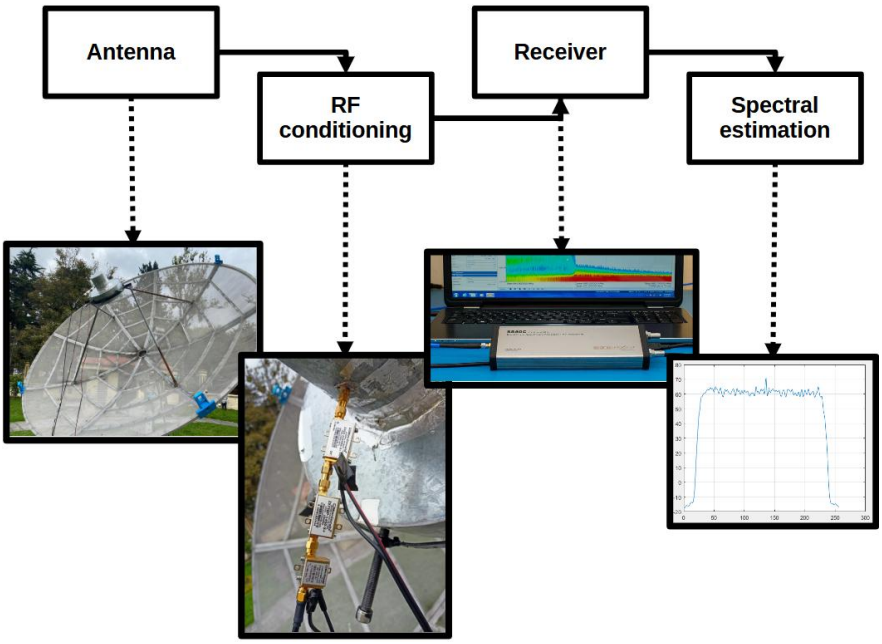

Fig. 1: Block Diagram of the Radio Telescope

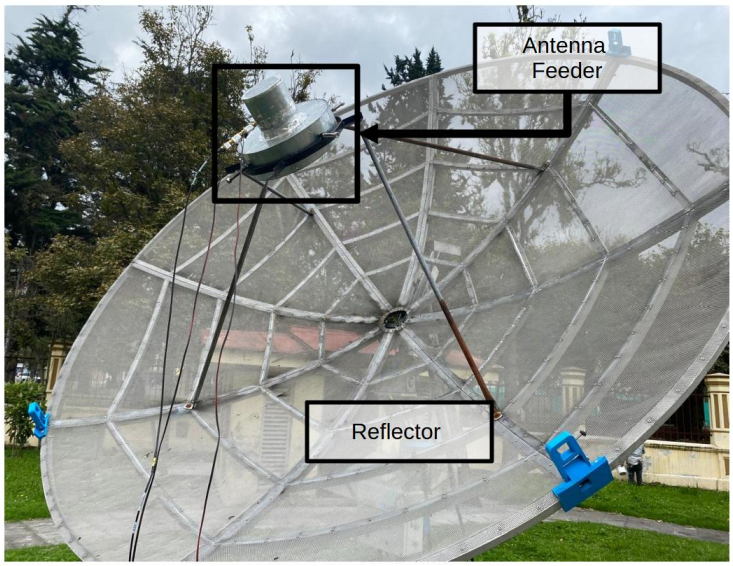

Fig. 2: Radio Telescope Antenna

The low power level of the radio signal of the hydrogen line perceived on the earth, makes necessary a conditioning stage. For this purpose, an amplification and filtering stage is used as shown in Fig. 3. The proposed design consists of three stages: amplifier, filter and amplifier. The first stage: the low noise amplifier ZX60-2534MA is used, this has a gain of 45 dB. The second stage: this is in series with the amplifier, and is a band pass filter (1400 MHz/1450 MHz). The third stage: this is a low noise amplifier with 25 dB of gain. Giving a combined gain to the frequency band where the radio signal emitted by the hydrogen line present in the Milky Way is found of 70 dB.

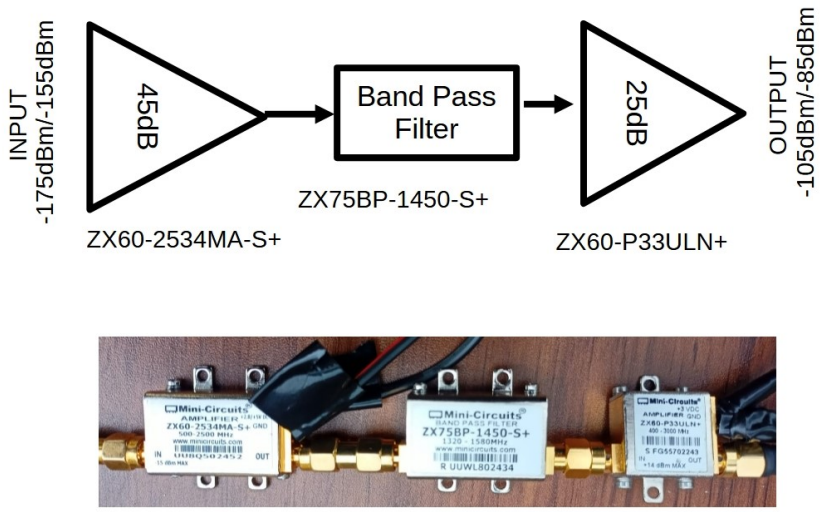

Fig. 3: Signal Conditioning Block

2.3 Receiver

Considering a range between -105 dBm and -85 dBm, a receiver is required that has a noise floor below this level, that is why the Signal Hounda BB60C receiver is selected, which has a noise floor for the band of interest of ≈ -160 dBm. It has an instantaneous bandwidth of 27 MHz optimal for sampling the band of interest (1420 MHz). With this device you can obtain the phase and quadrature of the radio signal of interest.

2.4 Spectral Estimation

The fundamental axis of the work is the spectral estimation, since with the receiver the radio signal is taken to base band and digitized to present the spec-

trum. And with the spectral estimation techniques a balance between resolution and temporal stability is sought [11, 12].

In this study aims to evaluate the performance of classical and parametric techniques [11]. Within the classical spectral estimation techniques, the use of direct and indirect techniques is proposed [11] (see, Fig. 4). The direct techniques proposed are: Barlett's periodogram and Welch's periodogram [13].

While for the indirect techniques we propose the use of the correlogram based on the Wiener-Khinchin-Einstein theorem [14].

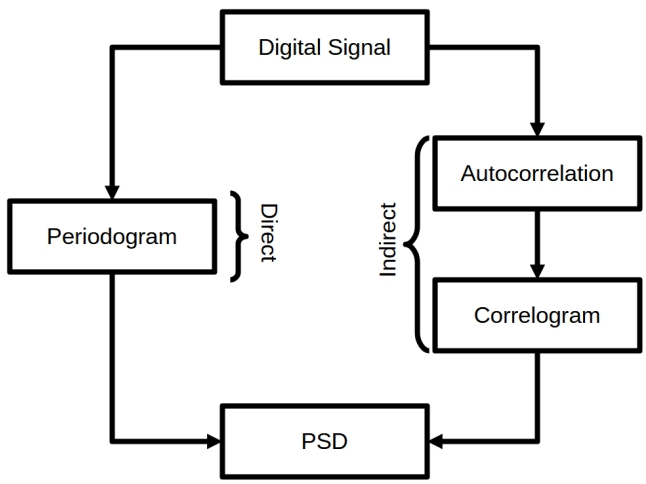

Fig. 4: Classical PSD

As a basis for the classical techniques, DFT with different window and overlapping functions is used

$$\tilde{P}_{xx}(f) = \frac{T}{N}\left|\sum_{n=0}^{N-1} x[n]exp(-j2\pi fnT)\right|^2$$

For the parametric PSD, two methods are evaluated: Burg method [15] and Yule-Walker method [16].

2.5 Experimental Setup

Digitize Phase and quadrature signals are digitized within the time (11h00 to 13h00), the best line of sight to the center of the Milky Way from Quito-Ecuador (Lat: -0.214953 and Lon: -78.502616) in the month of November.

Two sampling rates are used $Fs_1 = 312.5$ kS/s and $Fs_2 = 625.0$ kS/s, focused on the frequency of 1.420 GHz.

PSD Using the psd described in the previous section, tests are performed with different window sizes for each proposed PSD method between 32, 64 and 128. And for the parametric methods (burg and yule) different orders (32, 64 and 128) will be tested.

PSD Selection The choice of the technique is based on an estimation between the maximum component and the background noise (S_L).

$$S_L = 10 \log_{10} \left(\frac{max(\hat{P}(f))}{mean(\hat{P}(f))} \right)$$

3 Results

3.1 Time signal

The acquired signals are presented in Fig. 5. For this signals the F_{S_1} (see, Fig. 5a) and F_{S_2} (see, Fig. 5b) are used. In these signals the background noise is observed, and as they have a weak "periodical" background behavior, this behavior is more noticeable when using a higher sampling rate, so F_{S_2} is used for spectral estimation. In Fig. 6 a moving average window (MovAvg) [17] is applied for noise reduction and to observe the periodical signal (hydrogen line radio signal).

3.2 Test of spectral estimation methods

In Fig. 7, it can be seen that given a window size of 32 for the classical methods, there is a strong noise reduction but a weak detection of the signal of interest. On the other hand, the parametric autoregressive methods of order 32 present a strong signal detection (5 dB above noise level), but the noise is not totally eliminated, especially at the window limits.

By increasing the window size to 64, in the classical models the noise reduction is maintained, but the signal of interest already presents a higher level (3.5 dB above noise level), however the widening is significant as shown in Fig. 8. However, the parametric methods perform better at order 64, reducing noise and increasing their difference between signal and noise level by 6.8 dB (see, Fig. 8).

In the case of the 128 window, the classical spectral estimation methods maintain their noise attenuation (especially the correlogram), and improve their spectral resolution (see, Fig. 9). Increasing the order of the parametric models to 128 reduces their performance.

Finally, in Table 1, the difference between the signal power (hydrogen line) and the noise level is presented. It is observed that the best spectral resolution is obtained by the parametric methods (Burg and Yule-Walker). However, in a compromise between stability and resolution, the Correlogram has a better performance, since it significantly reduces the noise.

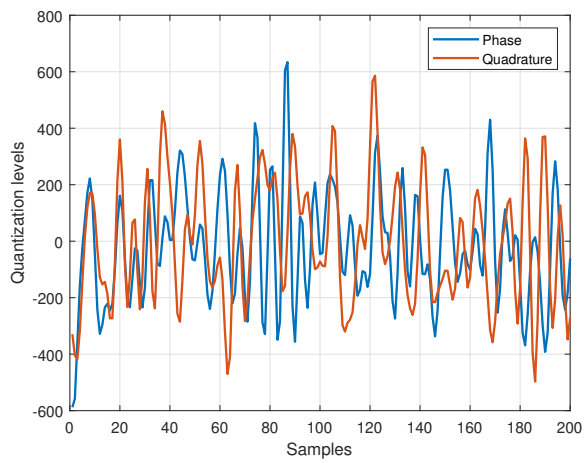

(a)

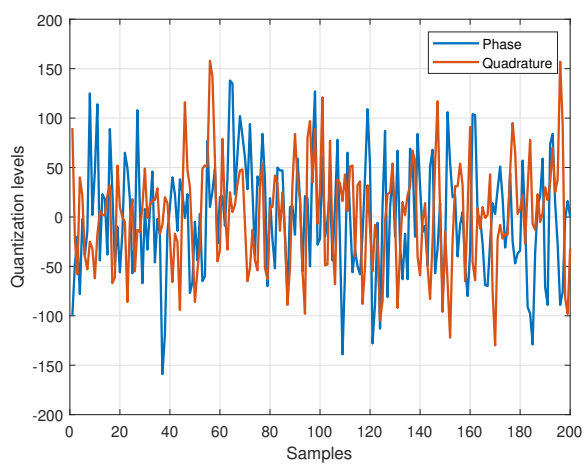

(b)

Fig. 5: Digital Signal Example: a) sampling frequency F_1, and b) sampling frequency F_2

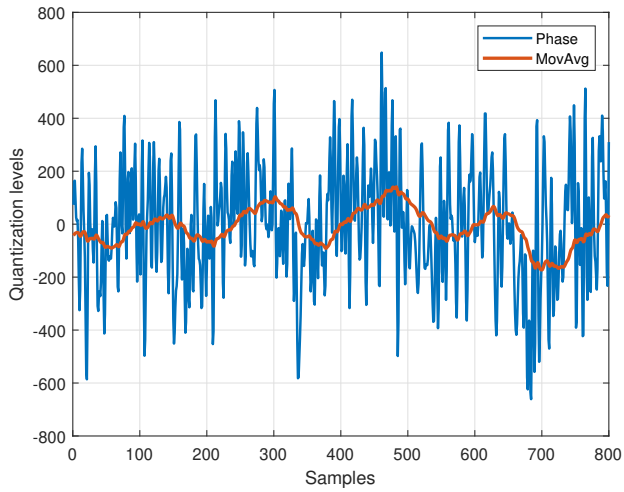

Fig. 6: Phase and Moving Average

Table 1: Difference between interest signal power and noise level

PSD	**Windows 32 or Order 32**	**Windows 64 or Order 64**	**Windows 128 or Order 128**
Welch	2.62 dB	3.58 dB	5.00 dB
Burg	5.10 dB	6.74 dB	3.85 dB
Yulear	5.35 dB	6.90 dB	4.14 dB
Barlett	2.78 dB	3.59 dB	4.96 dB
Correlogram	3.27 dB	4.99 dB	**7.62 dB**

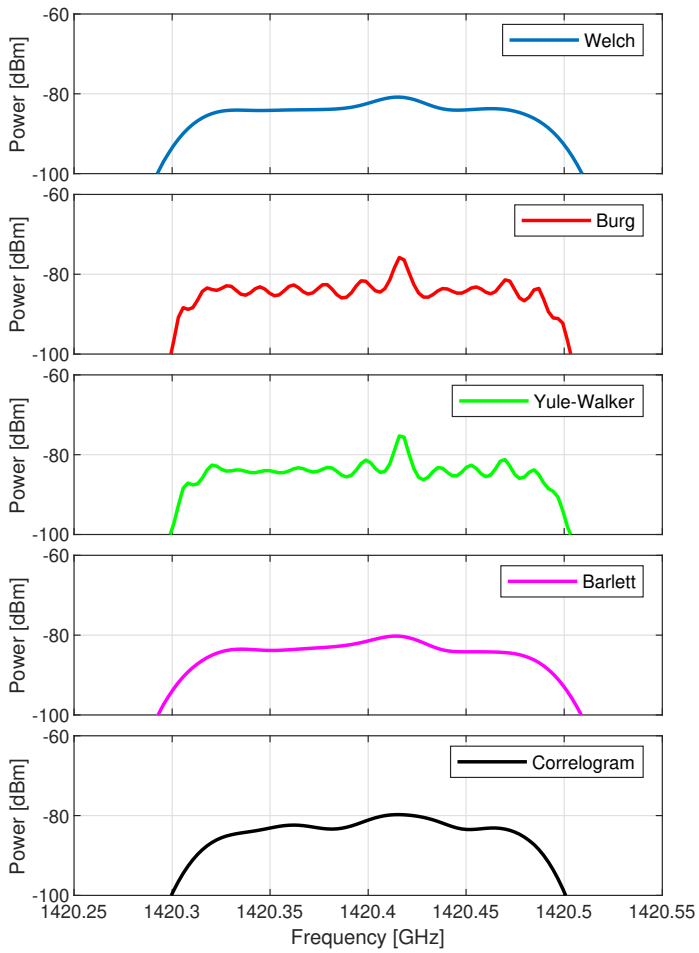

Fig. 7: Spectral estimation with window 32 or order 32

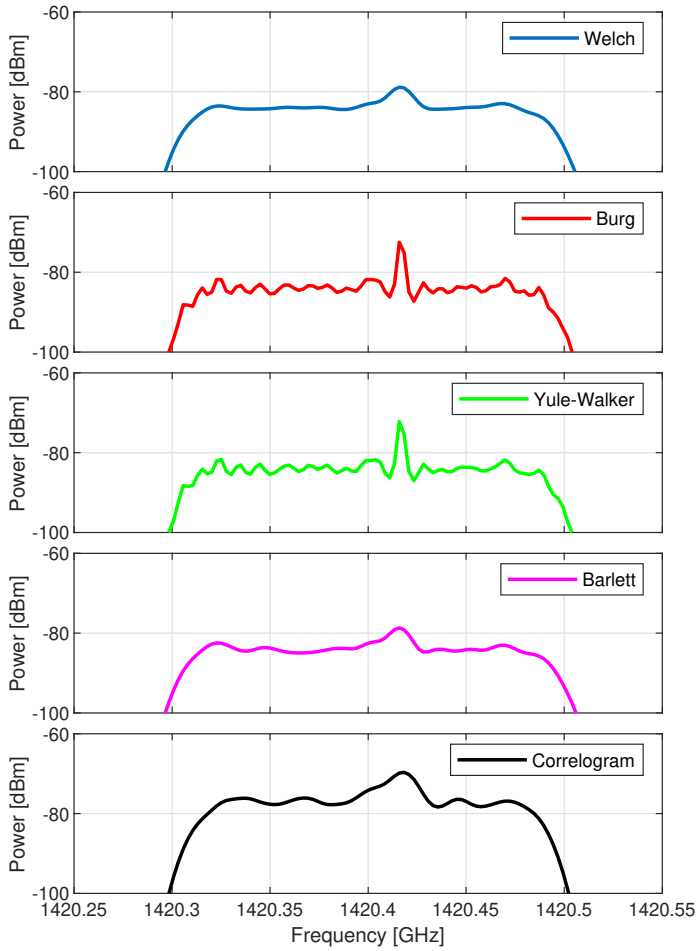

Fig. 8: Spectral estimation with window 64 or order 64

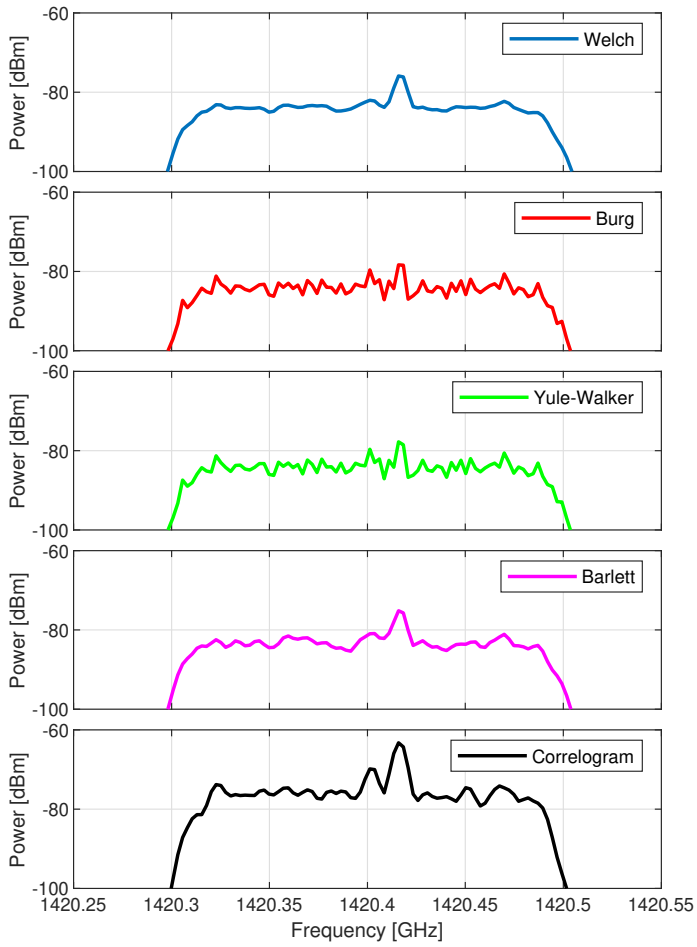

Fig. 9: Spectral estimation with window 128 or order 128

4 Conclusions

In this study, different spectral estimation techniques, both classical (direct and indirect) and parametric, are explored. To improve the detectability of the radio signal emitted by the hydrogen line in the Milky Way.

Spectral estimation techniques play a fundamental role in the detection of weak signals hidden in noise and the selection of an appropriate technique helps in detecting them, as well as finding their characteristic spectral signatures.

The Correlogram presents the best relationship between noise attenuation and spectral resolution presenting 7.62 dB of difference between signal power and noise level, it is important to note that the parametric estimation techniques present a better spectral resolution regardless of the order, however they do not adequately attenuate the noise level.

It is necessary to extend this study to time-frequency representations, since using only spectral information, there is a strong trade-off between stability and variance that could be overcome with time-frequency representations such as with Gabor transform [18] or Superlets transform [19].

This study is a basis for using the proposed spectral techniques in the search for different astronomical structures or celestial bodies such as pulsars, with the appropriate antenna redesign and signal conditioning.

References

1. D. Galadí-Enríquez, V. J. Martínez, E. M. Soler, and J. A. Miralles, *Astronomía fundamental*. Universitat de València, 2005, vol. 81.
2. N. M. McClure-Griffiths, S. Stanimirović, and D. R. Rybarczyk, "Atomic hydrogen in the milky way: a stepping stone in the evolution of galaxies," *Annual Review of Astronomy and Astrophysics*, vol. 61, no. 1, pp. 19–63, 2023.
3. S. R. Kulkarni, C. Heiles, and L. Blitz, "Atomic hydrogen in the outer milky way," *Astrophysical Journal, Part 2-Letters to the Editor, vol. 259, Aug. 15, 1982, p. L63-L66.*, vol. 259, pp. L63–L66, 1982.
4. D. R. Lorimer and M. Kramer, *Handbook of pulsar astronomy*. Cambridge university press, 2005, vol. 4.
5. A. Reckziegel, D. Stalder, and J. Molina, "Small radio telescope for observing the neutral hydrogen line of the milky way," *Proceedings of the 3rd South American International Industrial Engineering and Operations Management*, 2022.
6. F. Giménez-Cordellat, C. Reig, and E. A. Navarro-Camba, "Design and implementation of a software defined radio-based radio telescope for hydrogen line observation at 1.42 ghz," *Authorea Preprints*, 2024.
7. F. Giménez-Cordellat, C. Reig, and E. Navarro-Camba, "Design of a radio telescope for the observation of background radiation at 1.42 ghz based on software defined radio," in *2022 Congreso de Tecnología, Aprendizaje y Enseñanza de la Electrónica (XV Technologies Applied to Electronics Teaching Conference)*. IEEE, 2022, pp. 1–5.
8. N. Ragoomundun and G. K. Beeharry, "A hybrid sdr-gpu receiver for a low-frequency array in radio astronomy," *Experimental Astronomy*, vol. 47, pp. 313–324, 2019.

9. H. Rahman, *Fundamental principles of radar*. CRC Press, 2019.
10. F. Walter, E. Brinks, W. De Blok, F. Bigiel, R. C. Kennicutt, M. D. Thornley, and A. Leroy, "Things: The h i nearby galaxy survey," *The Astronomical Journal*, vol. 136, no. 6, p. 2563, 2008.
11. S. L. Marple Jr, *Digital spectral analysis*. Courier Dover Publications, 2019.
12. X.-D. Zhang, *Modern signal processing*. Walter de Gruyter GmbH & Co KG, 2022.
13. S. Engelberg, "Periodograms and the method of averaged periodograms [lecture notes]," *IEEE Signal Processing Magazine*, vol. 40, no. 6, pp. 83–91, 2023.
14. W. Gardner, "Introduction to einstein's contribution to time-series analysis," *IEEE ASSP Magazine*, vol. 4, no. 4, pp. 4–5, 1987.
15. C. Tabernig, "Power spectral density estimation," in *X Latin American Conference on Biomedical Engineering: Proceedings of CLAIB 2024, October 2-5, 2024, Panama City, Panama, Volume 2: Innovation and Development of Medical Devices and Advances in Digital Signal Processing*, vol. 121. Springer Nature, 2025, p. 378.
16. M. r. Isp´ ny, "Yule-walker estimation of periodic inar signals," in *2024 IEEE 3rd Conference on Information Technology and Data Science (CITDS)*. IEEE, 2024, pp. 1–8.
17. H. Magsi, A. H. Sodhro, F. A. Chachar, and S. A. K. Abro, "Analysis of signal noise reduction by using filters," in *2018 International Conference on Computing, Mathematics and Engineering Technologies (iCoMET)*. IEEE, 2018, pp. 1–6.
18. S. Qian and D. Chen, "Discrete gabor transform," *IEEE transactions on signal processing*, vol. 41, no. 7, pp. 2429–2438, 2002.
19. V. V. Moca, H. Bârzan, A. Nagy-Dăbâcan, and R. C. Mureșan, "Time-frequency super-resolution with superlets," *Nature communications*, vol. 12, no. 1, p. 337, 2021.