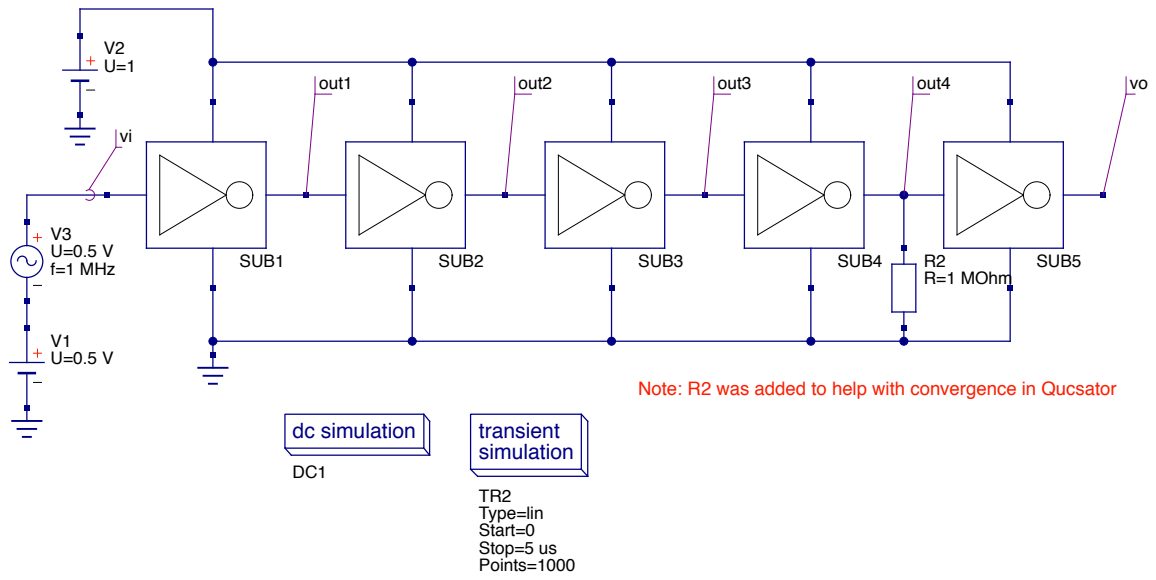

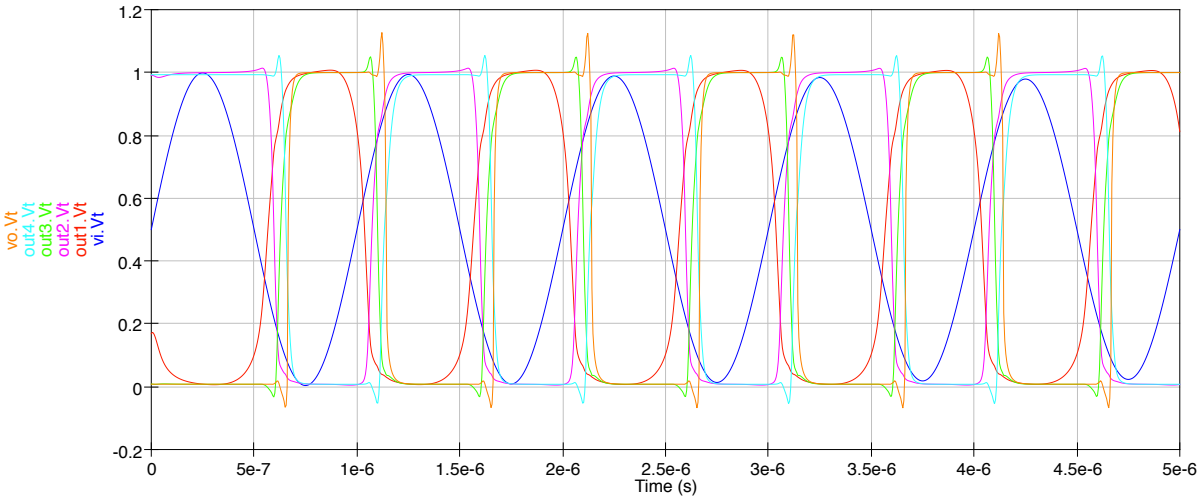

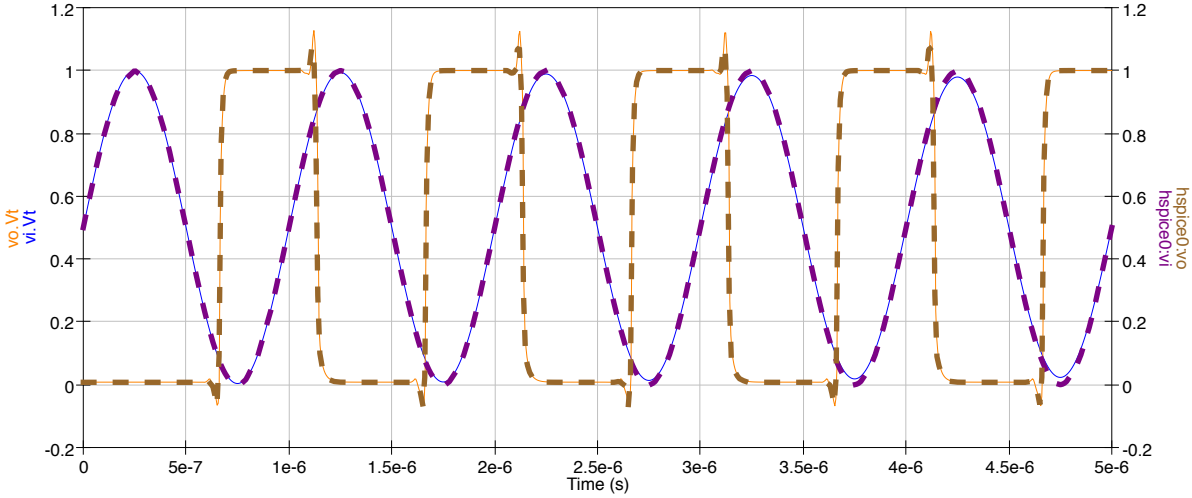

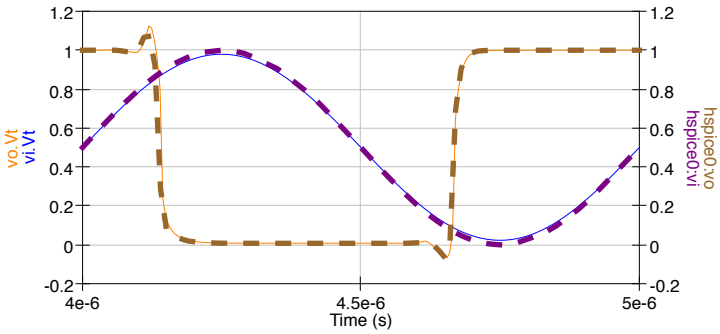

BSIM 6.1.0 benchmark: inverter_transient Adapted from benchmark released by the BSIM Group. It compares data from HSPICE and QUCS.	
Drawn By: Guilherme Brondani Torri	
Date: July 2015	Revision: 1