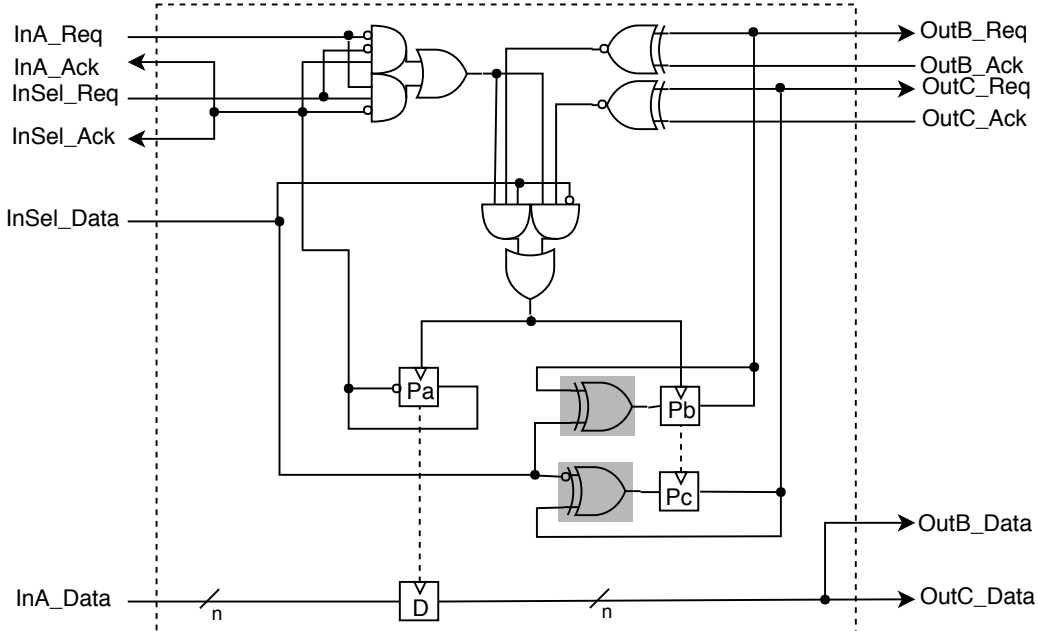BUFFERED DEMUX