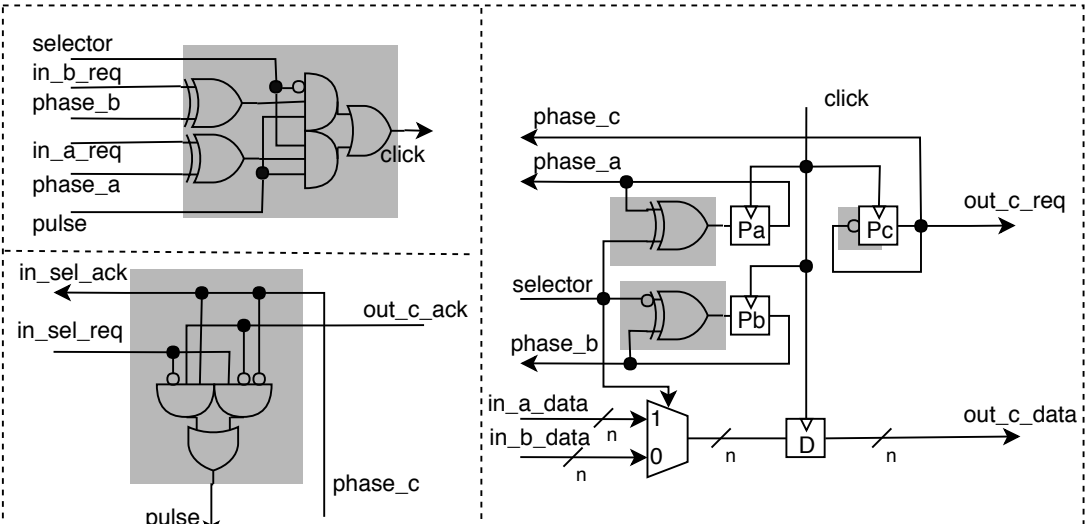BUFFERED MUX