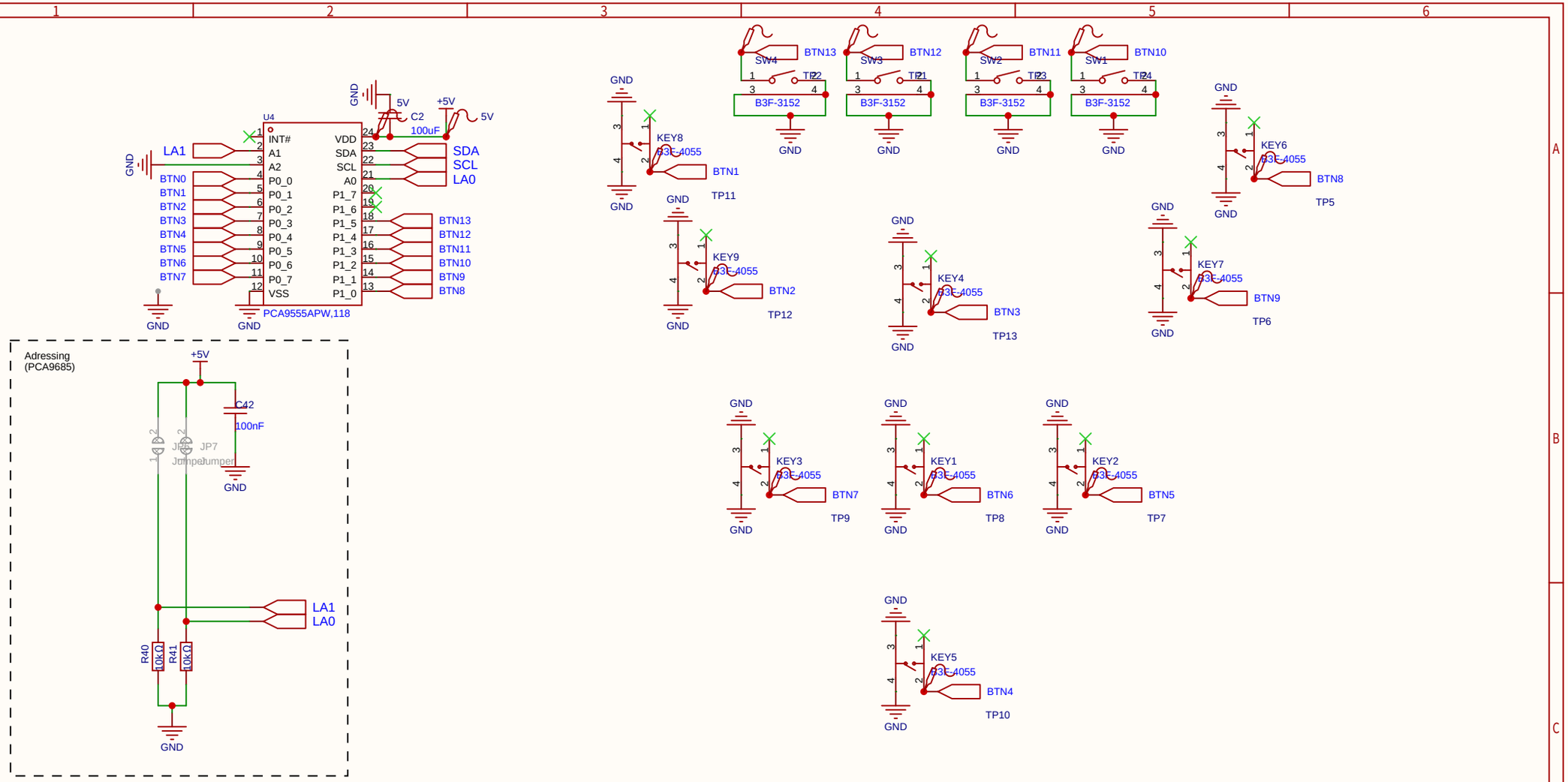

Schematic	Schematic1	Create at	2026-07-17
		Update at	2026-07-20
Board	Joystick Front	Page	Buttons
Drawn		ESP32S3R8N8 CAN Board	
Reviewed			
		Version	Size	Page 1 Total 2
EasyEDA		V1.0	A4	EasyEDA.com

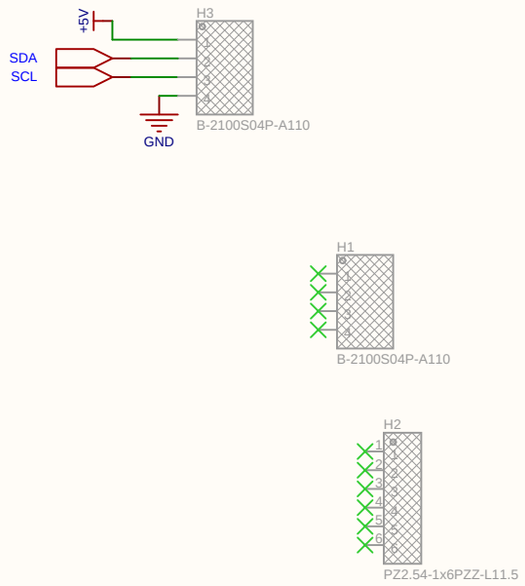

Schematic	Schematic1	Create at	2026-07-17
		Update at	2026-07-17
Board	Joystick Front	Page	Connector_parent
Drawn		ESP32S3R8N8 CAN Board	
Reviewed			
		Version	Size	Page 2 Total 2
EasyEDA		V1.0	A4	EasyEDA.com

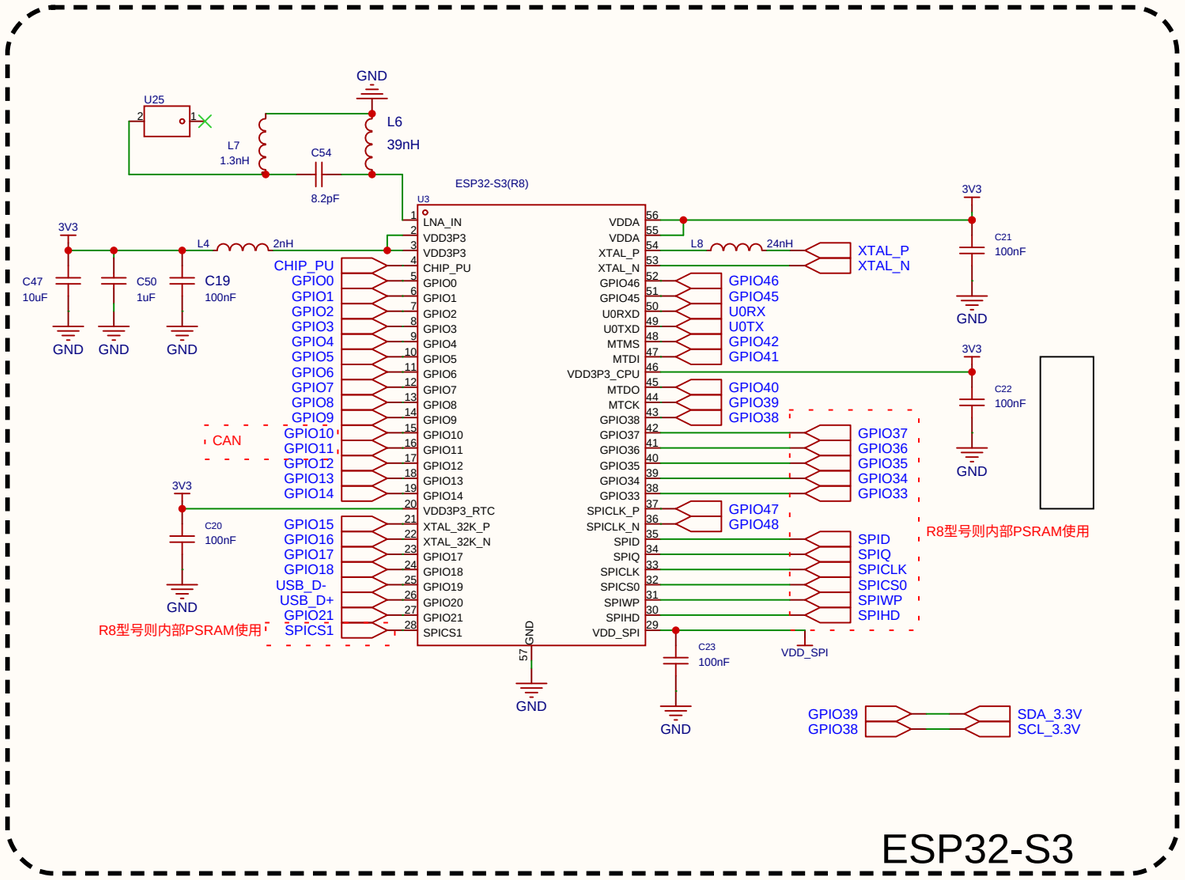

ESP32-S3

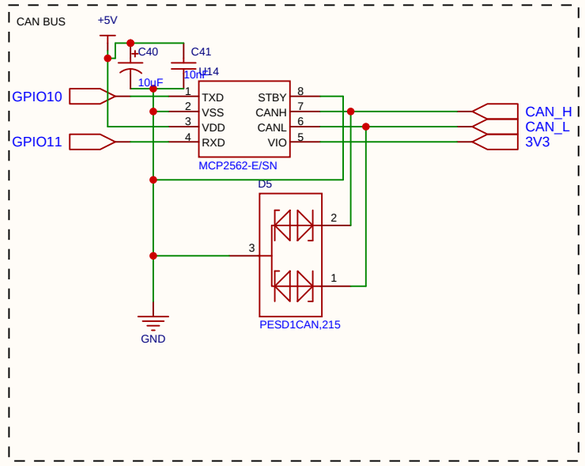

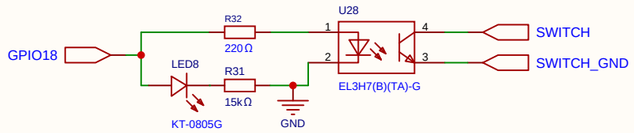

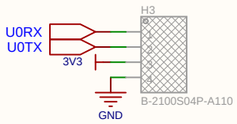

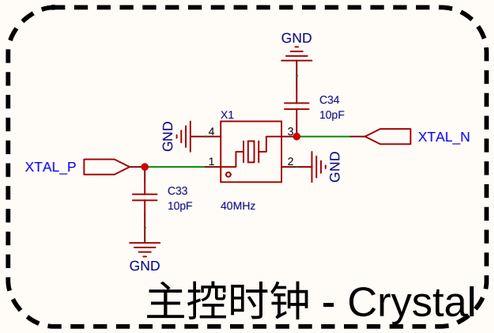

主控时钟 - Crystal

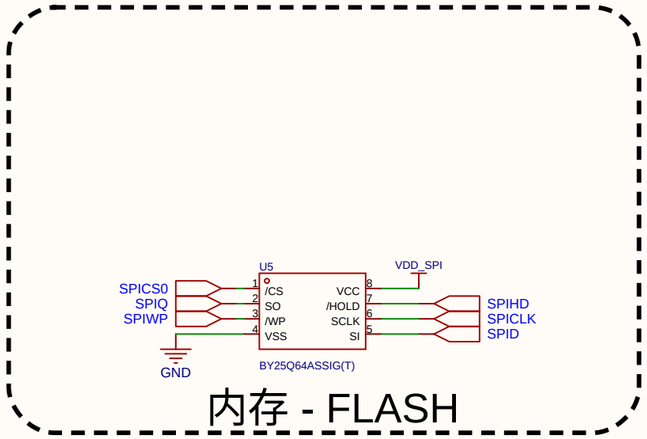

内存 - FLASH

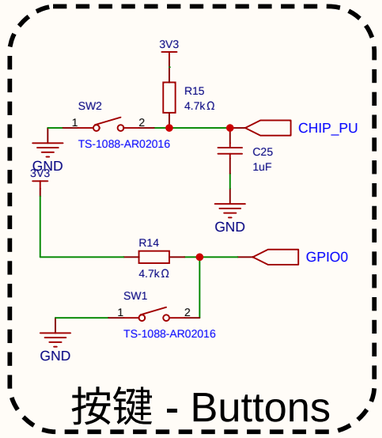

按键 - Buttons

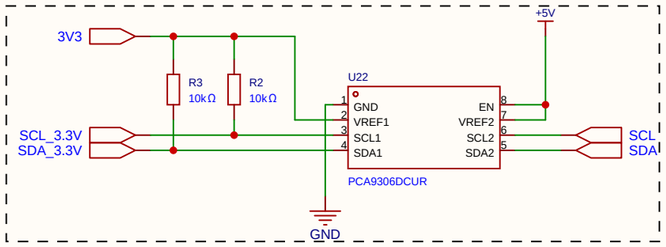

原理图	Schematic	更新日期	2026-07-13
		创建日期	2026-01-02
图页	core	物料编码	
绘制		ESP32S3R8N8 CAN Board	
审阅	嘉立创EDA		
		版本	尺寸	页 1 共 5
嘉立创EDA		A4	嘉立创EDA

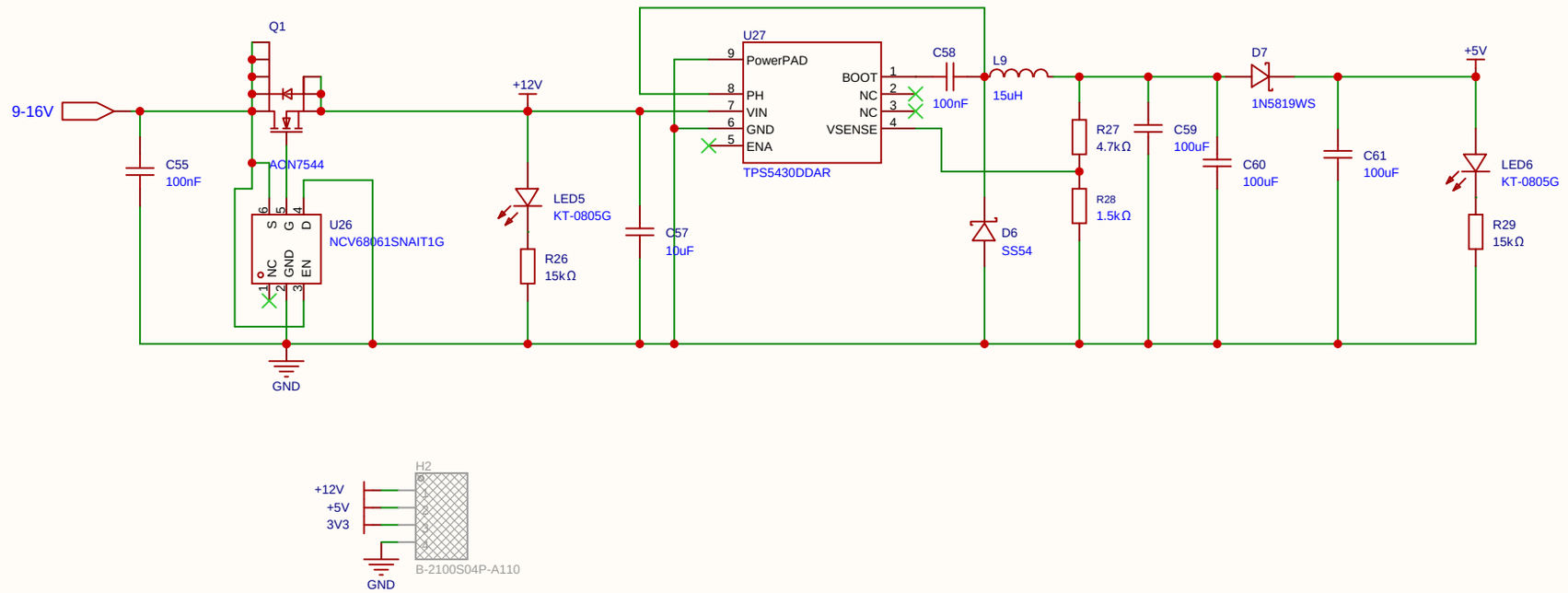

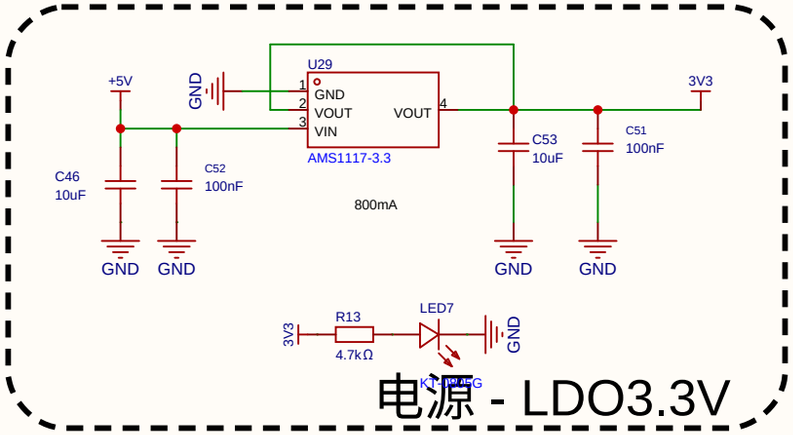

原理图	Schematic	更新日期	2026-01-02
		创建日期	2026-01-02
图页	power	物料编码	
绘制		ESP32S3R8N8 CAN Board	
审阅	嘉立创EDA		
		版本	尺寸	页 2 共 5
嘉立创EDA		A4	嘉立创EDA

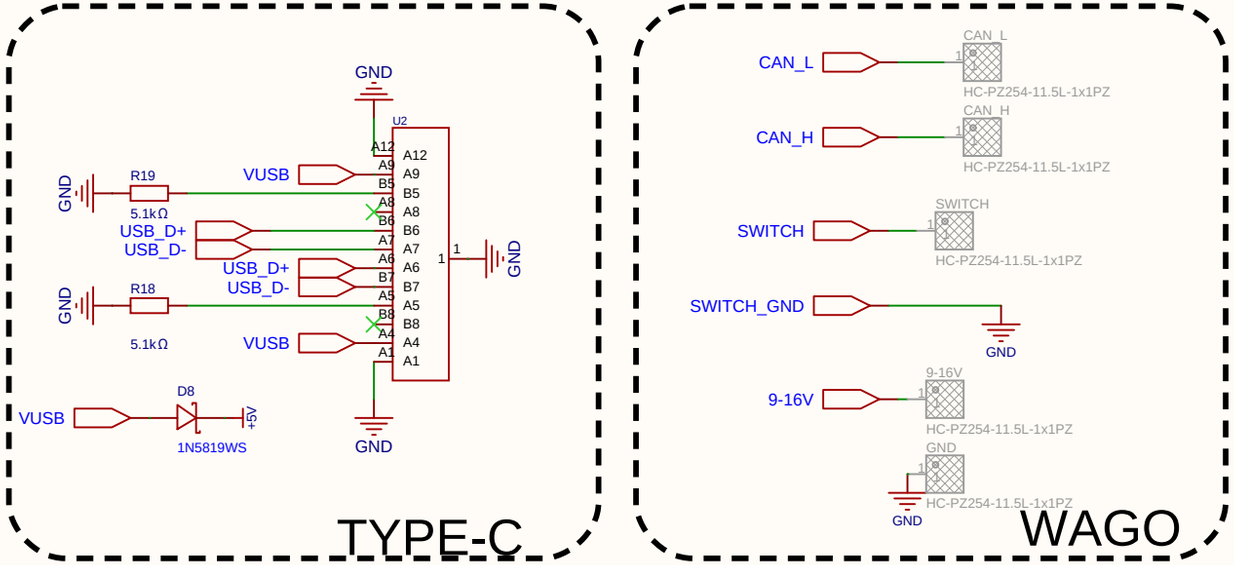

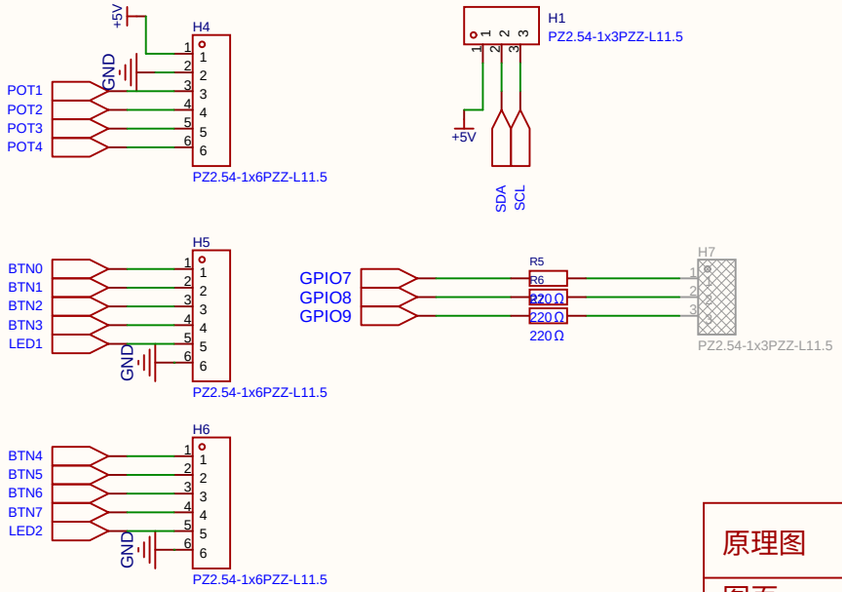

原理图	Schematic	更新日期	2026-07-13
		创建日期	2026-01-01
图页	connectors	物料编码	
绘制		ESP32S3R8N8 CAN Board	
审阅	嘉立创EDA		
		版本	尺寸	页 3 共 5
嘉立创EDA			A4	嘉立创EDA

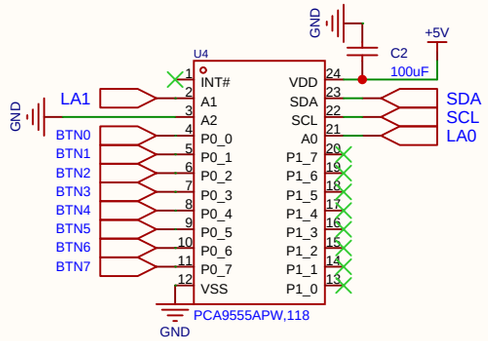

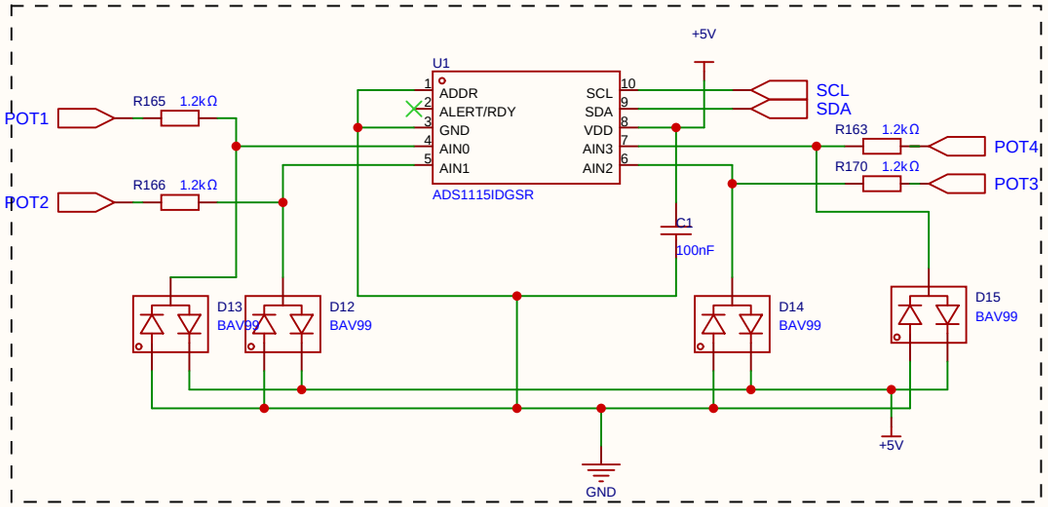

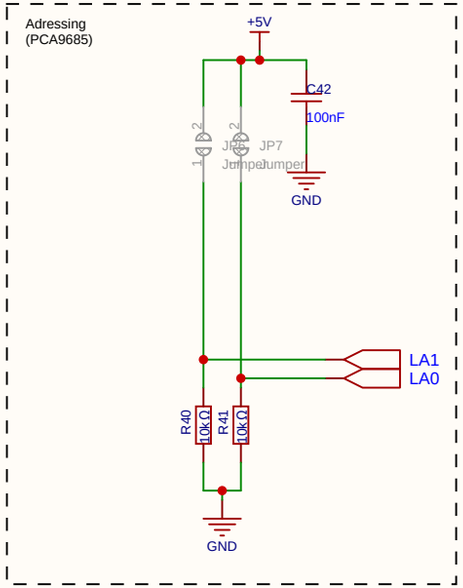

Schematic	Schematic	Create at	2026-07-13
		Update at	2026-07-17
Board	LCSC ESP32S3R8N8 Dev Board V1.0.0	Page	inputs
Drawn			
Reviewed			

ESP32S3R8N8 CAN Board

	Version	Size	Page 4 Total 5
EasyEDA	V1.0	A4	EasyEDA.com

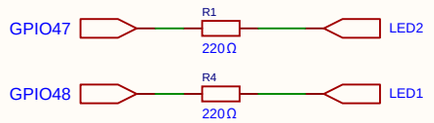

Schematic	Schematic	Create at	2026-07-13
		Update at	2026-07-13
Board	LCSC ESP32S3R8N8 Dev Board V1.0.0	Page	outputs
Drawn	ESP32S3R8N8 CAN Board		
Reviewed			
	Version	Size	Page 5 Total 5
EasyEDA	V1.0	A4	EasyEDA.com