2 Automation configurations and CAN bus structures

2.1 Versu Direct T4 1A7 & N4 1B7

2.1.1 Automation configuration

Model	Automation configuration	Standard control units	CAN ID	
T4 1A7 N4 1B7 Versu Direct	AC 35.5 AC 34.5	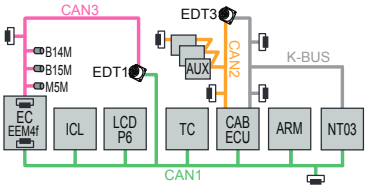	EC = 0 ICL = 23 LCD = 59 TC = 3 CABECU CAN1 = 49 CABECU CAN2 = 49, 16 CABECU K-BUS = – (CABECU CAN4 = 240) ARM = 5 NT03 = – M5M (WASTE GATE)= 131 B14M, B15M (NOx) = 81, 82	AUX1 =129 AUX2 =130 AUX3 =131 AUX4 =132 AUX5 =133 AUX1F =135 AUX2F =136 AUX3F =137 AUX4F =138

Abbreviation	Description
EC	ECU, EC (engine control unit)
ICL	Instrument panel
LCD	A-pillar display (P6)
TC	ECU, TC (transmission control unit)
CABECU	ECU, CABECU (cab control unit)
ARM	SmartTouch armrest
NT03	SmartTouch display
AUX	Auxiliary hydraulic valve
EDT1	Diagnostic connector 1
EDT3	Diagnostic connector 3
B14M, B15M	NOx sensors
M5M	Actuator, waste gate

Additional equipment	Description	CAN ID
VD03	Auto-Guide navigation controller	–
PVED-CC	Steering valve	PVED-CC = 143
SASA	Sensor, steering angle (SASA), front	SASA = 769
TWIN TRAC	Steering unit, rear	TWIN TRAC = 772
ACM	Agco Connectivity Module (telemetry)	AGCOMMAND = 74
NT03	Additional display for Auto-Guide and ISOBUS	–

Table continued on next page

Additional equipment	Description	CAN ID
ISOAD	ECU, ISO adapter (implement signal connection ISO11786)	ISOAD = 220
EDT2	Diagnostic connector 2	-
AUTO HVAC	Control panel, AUTO HVAC	AUTO HVAC = 25
LCD	C-pillar display (P7)	LCD = 60
RADIO	Radio	RADIO = 76
SUS1	ECU, SUS1, AutoComfort	SUS1 = 47

2.1.2 CAN bus structure

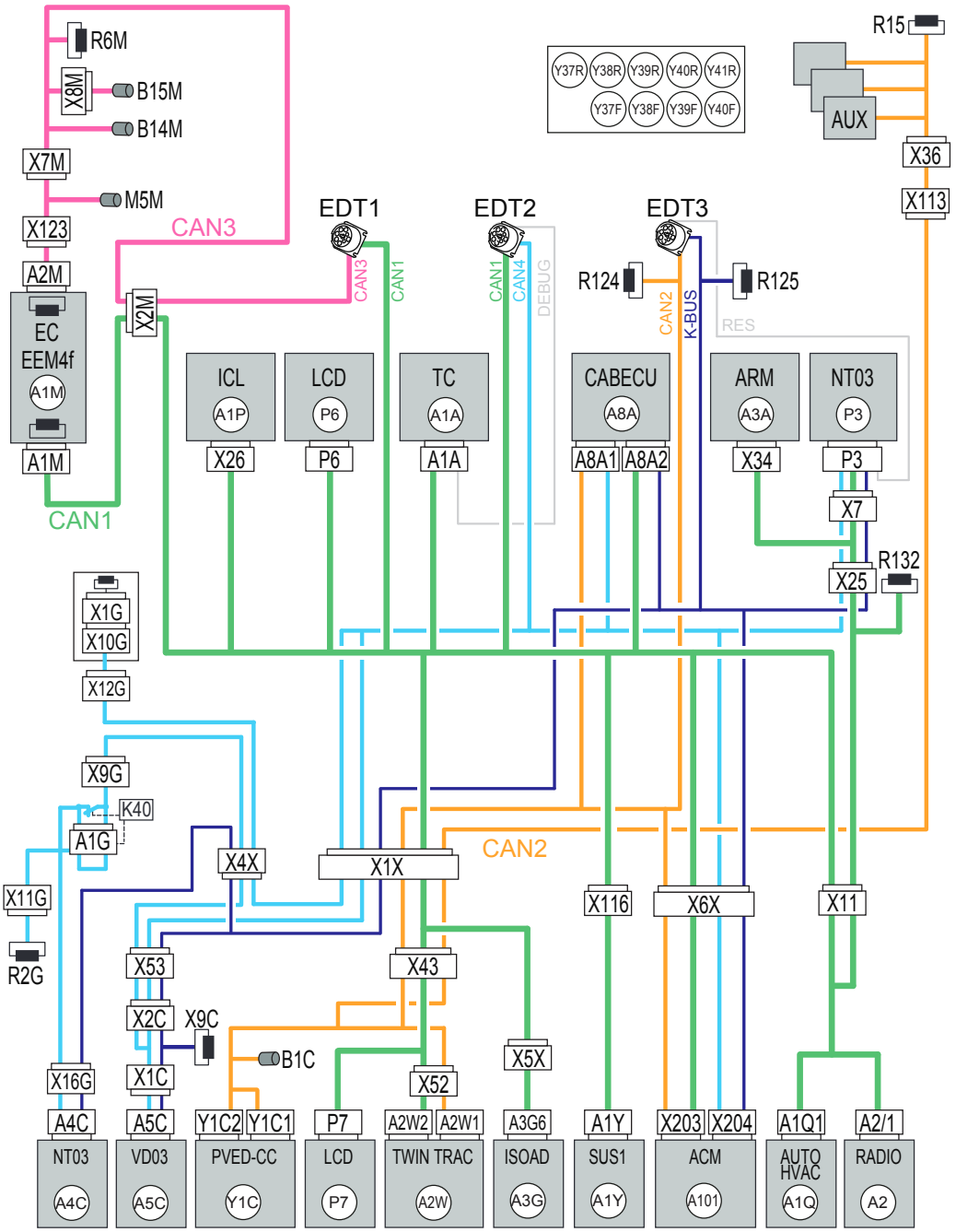

Control unit	Description	CAN ID	Connector / PIN	Functions
A1A	ECU, TC (transmission control unit)	TC = 3	A1A: CAN1_L = 27 CAN1_H = 28 DEBUG_L = 49 (factory use only) DEBUG_H = 50 (factory use only) +30 (F125): 1 +30 (F132) : 3, 5 Power GND: 2, 4, 6	transmission control power take-off Sigma power hydraulic assistant parking brake ensure emergency brake brake cooling diagnostics services calibration procedures Valtra Power Management fan control rear linkage control
A1G	ISOBUS terminal interface (additional equipment)	-	A1G: CAN4_L = 2, 3 CAN4_H = 4, 5 +30 (F51 / K33) : 1, 7 Power GND: 9	ISOBUS terminal interface
A1M	ECU, EC (engine control unit)	EC = 0	A1M (tractor): CAN1_L = 47 CAN1_H = 46 +BAT (F2M; F3M / V1M): 1, 25, 26, 49, 73 Power GND: 3, 5, 28, 29, 52, 75, 76 A2M (engine): CAN3_L = 18 CAN3_H = 17 Power GND: 78	rpm torque preheater fuel injection fan emission control
A1P	Instrument panel	ICL = 23	X26: CAN1_L = 13 CAN1_H = 12 Power GND: 22 X27: +15 (F112): 21 +30 (F9M): 10 +BAT (F118): 3 Power GND: 5	indicator lights indicator gauges information display clock vehicle hours
A1Q	Control panel, AUTO HVAC (additional equipment)	AUTO HVAC = 25	A1Q1: CAN1_L = 16 CAN1_H = 7 +15 (F16): 15 +30 (F23): 9 Power GND: 1	Automatic air conditioning
A1Y	ECU, SUS1, Autocomfort (additional equipment)	SUS1 = 47	A1Y: CAN1_L = 39 CAN1_H = 40 +15 (F105): 14, 42 +30 (F122): 1, 9, 29 Power GND: 15, 28	Cab suspension Front axle suspension
A2	Radio (additional equipment)	RADIO = 76	A2/1: CAN1_L = 3 CAN1_H = 1 +30 (F13): 4 +BAT (F118): 7 Power GND: 8	Radio

Table continued on next page

Control unit	Description	CAN ID	Connector / PIN	Functions
A2W	Steering unit, rear (additional equipment)	TWIN TRAC = 772	A2W1: CAN2_L = 4 CAN2_H = 3 +15 (F105): 1 Power GND: 2 A2W2: CAN1_L = 6 CAN1_H = 5 +15 (F117): 1 Power GND: 2	Steering unit, rear
A3A	SmartTouch armrest	ARM = 5	X34: CAN1_L = 8 CAN1_H = 7 +15 (F113): 1 +30 (F125): 3 Power GND: 5	User interface for tractor functions
A3G	ECU, ISO adapter (additional equipment)	ISOAD = 220	A3G1: +15 (F117): 1 Power GND: 2 A3G2: +15 (F117): 6 A3G6: CAN1_L = 2 CAN1_H = 3	Link between tractor and implement signal interface (ISO11786)
A4C	Additional display for Auto-Guide and ISOBUS	–	A4C: CAN4_L = 5 CAN4_H = 12 KBUS_L = 3 KBUS_H = 10 +15 (F117): 15 +30 (F125) : 8 Power GND: 7	Additional display for Auto-Guide and ISOBUS
A5C	Auto-Guide navigation controller	–	A5C: CAN4_L = 22 CAN4_H = 23 KBUS_L = 20 KBUS_H = 21 +15 (F111): 10 +30 (F125) : 8 Power GND: 9	Auto-Guide navigation controller
Table continued on next page				

Control unit	Description	CAN ID	Connector / PIN	Functions
A8A	ECU, CABECU (cab control unit)	CABECU CAN1 = 49 CABECU CAN2 = 49, 16 CABECU K-BUS = – CABECU CAN4 = 240	A8A1: CAN2_L = 62 CAN2_H = 63 CAN4_L = 60 CAN4_H = 61 Power GND: 22, 23, 24 A8A2: CAN1_L = 16 CAN1_H = 15 KBUS_L = 54 KBUS_H = 53 +15 (F117): 40 +30 (F131): 1, 3, 4, 5, 6, 45, 58 Power GND: 2, 7, 20, 33, 46	parking brake control front PTO control working lights control radio remote control hydraulics control U-Pilot control driving direction control 4wd automatics differential lock automatics diagnostics services: calibrations, IO-test link between CAN buses (CAN1...CAN4) and display/armrest bus (KBUS) Softdrive Bucket release Selecto 3 Selecto 4 Auto-Guide control TwinTrac control QuickSteer control ISO 11783 signal interface (ISOBUS)
A101	AGCO Connectivity Module (ACM) (additional equipment)	AGCOMMAND = 74	X203: CAN1_L = 7 CAN1_H = 6 CAN2_L = 8 CAN2_H = 5 +15 (F117): 12 Power GND: 2 X204: CAN4_L = 7 CAN4_H = 6 KBUS_L = 8 KBUS_H = 5	Telemetry
B1C	Sensor, steering angle (SASA), front (additional equipment)	SASA = 769	B1C: CAN2_L = 1 CAN2_H = 4	Sensor, steering angle (SASA), front
B14M	Sensor, NOx upstream	NOx1 = 81	B14M: CAN3_L = 3 CAN3_H = 4	Sensor, NOx upstream
B15M	Sensor, NOx downstream	NOx2 = 82	B15M: CAN3_L = 3 CAN3_H = 4	Sensor, NOx downstream
EDT1	Diagnostic connector 1	–	EDT1: CAN1_L = D CAN1_H = C CAN3_L = J CAN3_H = H	Diagnostic connector 1: CAN1 (tractor) CAN3 (engine)
EDT2	Diagnostic connector 2	–	EDT2: CAN1_L = D CAN1_H = C CAN4_L = J CAN4_H = H DEBUG_L = F (factory use only) DEBUG_H = E (factory use only)	Diagnostic connector 2: CAN1 (tractor) CAN4 (implement) DEBUG (factory use only)

Table continued on next page

Control unit	Description	CAN ID	Connector / PIN	Functions
EDT3	Diagnostic connector 3	–	EDT3: CAN2_L = J CAN2_H = H KBUS_L = D KBUS_H = C	Diagnostic connector 3: CAN2 (hydraulics) KBUS (display, armrest)
K40	ISOBUS CAN split relay	–	K40: CAN4_L = 5, 6 CAN4_H = 1, 4	ISOBUS CAN split relay relay contacts are open when the additional display for Auto-Guide and ISOBUS is connected
M5M	Actuator, waste gate	WASTE GATE = 131	M5M: CAN3_L = 3 CAN3_H = 4	Actuator, waste gate
P3	SmartTouch display	NT03 = –	P3: CAN1_L = 4 CAN1_H = 11 CAN4_L = 5 CAN4_H = 12 KBUS_L = 3 KBUS_H = 10 +15 (F113): 15 +30 (F125): 8 Power GND: 7	information display transmission and hydraulics settings U-Pilot display and editor profiles map Auto-Guide user interface ISOBUS user interface camera display
P6	A-pillar display	LCD = 59	P6: CAN1_L = 8 CAN1_H = 1 +15 (F109): 2 Power GND: 3	TC status display DEF level display I/O test section
P7	C-pillar display (additional equipment)	LCD = 60	P7: CAN1_L = 8 CAN1_H = 1 +15 (F105): 2 Power GND: 3	TC status display DEF level display I/O test section
R2G	Terminating resistor module, ISOBUS	–		Terminating resistor module, ISOBUS
R6M	Terminating resistor, CAN3, engine end	–		Terminating resistor, CAN3, engine end
R15	Terminating resistor, CAN2, valve end	–		Terminating resistor, CAN2, valve end
R124	Terminating resistor, CAN2	–		Terminating resistor, CAN2
R125	Terminating resistor, KBUS	–		Terminating resistor, KBUS
R132	Terminating resistor, CAN1	–		Terminating resistor, CAN1
X9C	Terminating resistor, KBUS	–		Terminating resistor, KBUS
X1C	Connector, top dock interface	–	X1C: CAN4_L = C CAN4_H = D KBUS_L = E KBUS_H = F	Connector, top dock interface
X1G	Connector, ISOBUS ISO BOX (ISO11783), rear	–		Connector, ISOBUS ISO BOX (ISO11783), rear

Table continued on next page

Control unit	Description	CAN ID	Connector / PIN	Functions
X1X	Connector, options	–	X1X: CAN1_L = 6 CAN1_H = 5 CAN2_L = 9, 11 CAN2_H = 8, 10 CAN4_L = 4, 21 CAN4_H = 3, 22 KBUS_L = 13 KBUS_H = 12	Connector, options
X2C	Connector, autosteering harness cab – roof	–	X2C: CAN4_L = 2, 3 CAN4_H = 4, 9 KBUS_L = 5 KBUS_H = 6	Connector, autosteering harness cab – roof
X2M	Connector, engine – cab	–	X2M: CAN1_L = 6 CAN1_H = 5 CAN3_L = 31 CAN3_H = 30	Connector, engine – cab
X4X	Connector, ISOBUS interface	–	X4X: CAN4_L = 7, 4 CAN4_H = 6, 3 KBUS_L = 2 KBUS_H = 1	Connector, ISOBUS interface
X5X	Connector, ISO-adapter	–	X5X: CAN1_L = 4 CAN1_H = 3	Connector, ISO-adapter
X6X	Connector, telemetry	–	X6X: CAN1_L = 4 CAN1_H = 3 CAN2_L = 10 CAN2_H = 11 CAN4_L = 9 CAN4_H = 8 KBUS_L = 13 KBUS_H = 12	Connector, telemetry
X7	Connector, SmartTouch display	–	X7: CAN1_L = 2 CAN1_H = 7 CAN4_L = 3 CAN4_H = 8 KBUS_L = 1 KBUS_H = 6	Connector, SmartTouch display
X7M	Connector, cross-wiring tractor - engine	–	X7M: CAN3_L = 6 CAN3_H = 5	Connector, cross-wiring tractor - engine
X8M	Connector, exhaust pipe	–	X8M: CAN3_L = 3 CAN3_H = 4	Connector, exhaust pipe
X9G	Connector, autosteering bus extension	–	X9G: CAN4_L = 4 CAN4_H = 2	Connector, autosteering bus extension
X11	Connector, cab – inner roof	–	X11: CAN1_L = 8, 35 CAN1_H = 7, 34	Connector, cab – inner roof
X10G	Connector, ISOBUS ISO box (ISO11783), CAN, rear		X10G: CAN4_L = 4 CAN4_H = 2	Connector, ISOBUS ISO box (ISO11783), CAN, rear
X11G	Connector, ISOBUS ISO BOX (ISO11783), CAN, front	–	X11G: CAN4_L = 4 CAN4_H = 2	Connector, ISOBUS ISO BOX (ISO11783), CAN, front

Table continued on next page

Control unit	Description	CAN ID	Connector / PIN	Functions
X12G	Connector, ISOBUS CAN out, rear	–	X12G: CAN4_L = 4 CAN4_H = 2	Connector, ISOBUS CAN out, rear
X16G	Connector, ISOBUS interface – additional SmartTouch display	–	X16G: CAN4_L = 2 CAN4_H = 1 KBUS_L = 10 KBUS_H = 9	Connector, ISOBUS interface – additional SmartTouch display
X25	Connector, seat	–	X25: CAN1_L = 6 CAN1_H = 5 CAN4_L = 9 CAN4_H = 10 KBUS_L = 7 KBUS_H = 8	Connector, seat
X36	Connector, CAN-valve harness	–	X36: CAN2_L = 4 CAN2_H = 2	Connector, CAN-valve harness
X43	Connector, cab – TwinTrac	–	X43: CAN1_L = 1 CAN1_H = 2 CAN2_L = 3, 5 CAN2_H = 4, 6	Connector, cab – TwinTrac
X52	Connector, TwinTrac control devices	–	X52: CAN1_L = 5 CAN1_H = 4 CAN2_L = 8 CAN2_H = 7	Connector, TwinTrac control devices
X53	Connector, autosteering control devices	–	X53: CAN4_L = 7, 9 CAN4_H = 8, 10 KBUS_L = 4 KBUS_H = 5	Connector, autosteering control devices
X113	Connector, transmission connector 2	–	X113: CAN2_L = 2 CAN2_H = 1	Connector, transmission connector 2
X116	Connector, cabin suspension	–	X116: CAN1_L = 2 CAN1_H = 5	Connector, cabin suspension
X123	Connector, engine – actuators	–	X123: CAN3_L = 4 CAN3_H = 3	Connector, engine – actuators
Y1C	Steering valve (additional equipment)	PVED-CC = 143	Y1C1: CAN2_L = 1 CAN2_H = 4 Y1C2: CAN2_L = 1 CAN2_H = 4	Auto-Guide QuickSteer TwinTrac
Y37R...Y41R	Auxiliary hydraulic valve, rear AUX 1–5	AUX1 =129 AUX2 =130 AUX3 =131 AUX4 =132 AUX5 =133	Y37R...Y41R: CAN2_L = B CAN2_H = A +30 (F123 / K4): D Power GND: C	Digital valve control: spool positioning diagnostics
Y37F...Y40F	Auxiliary hydraulic valve, front AUX 1-4 (additional equipment)	AUX1F =135 AUX2F =136 AUX3F =137 AUX4F =138	Y37F...Y40F: CAN2_L = B CAN2_H = A +30 (F123 / K4): D Power GND: C	Digital valve control: spool positioning diagnostics

2.1.3 CAN1 structure

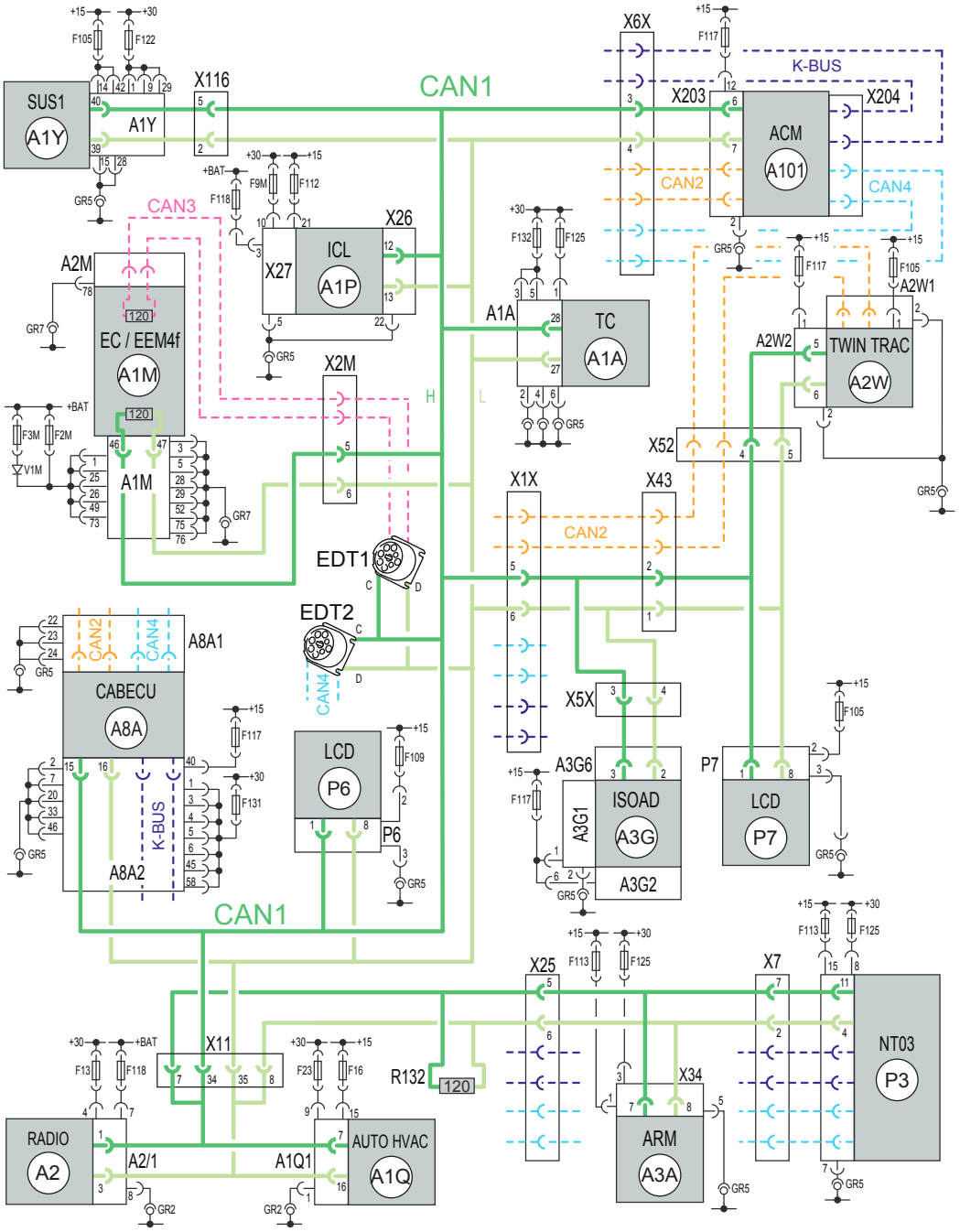

2.1.4 CAN2 structure

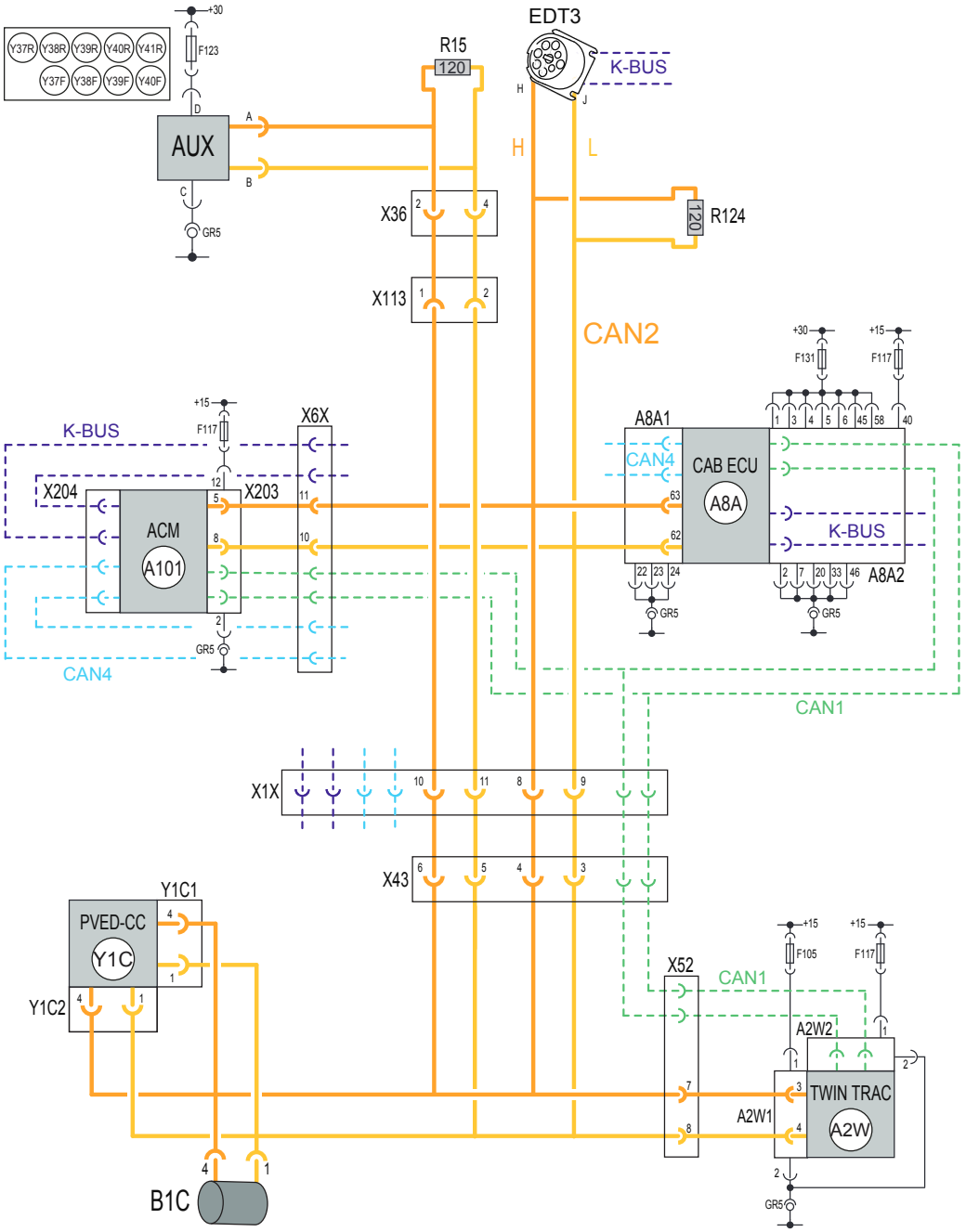

2.1.5 CAN3 structure

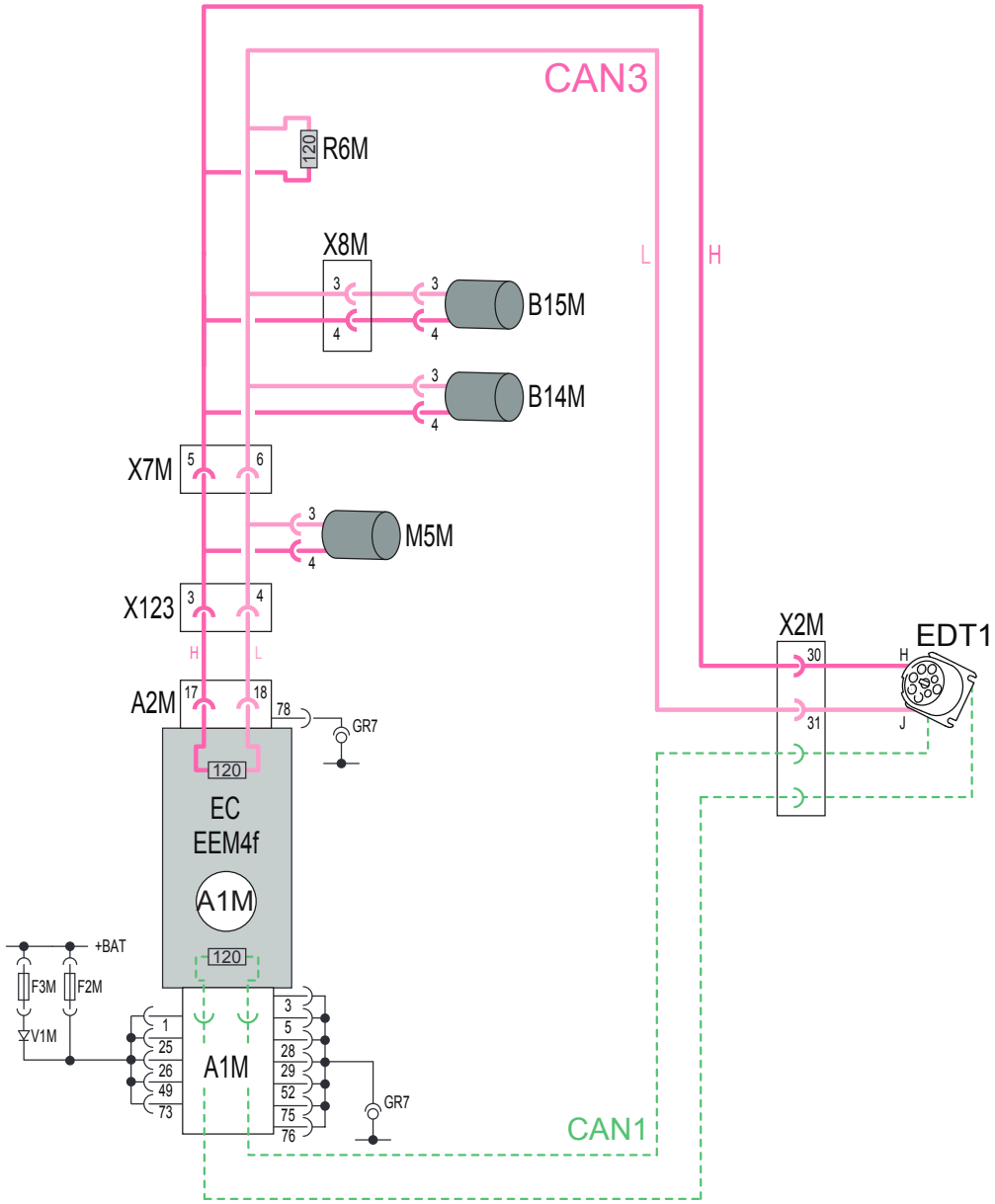

2.1.6 CAN4 structure

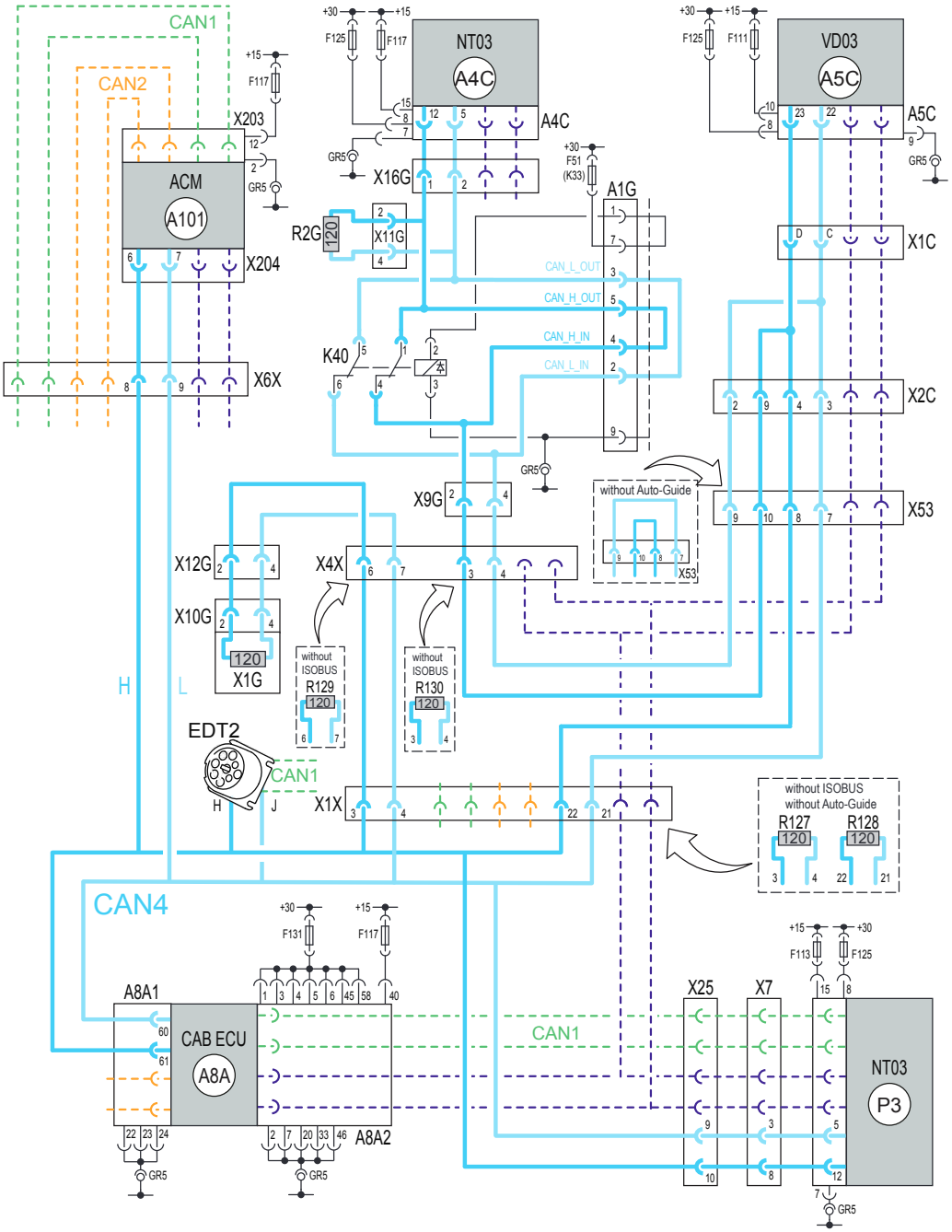

2.1.7 KBUS structure

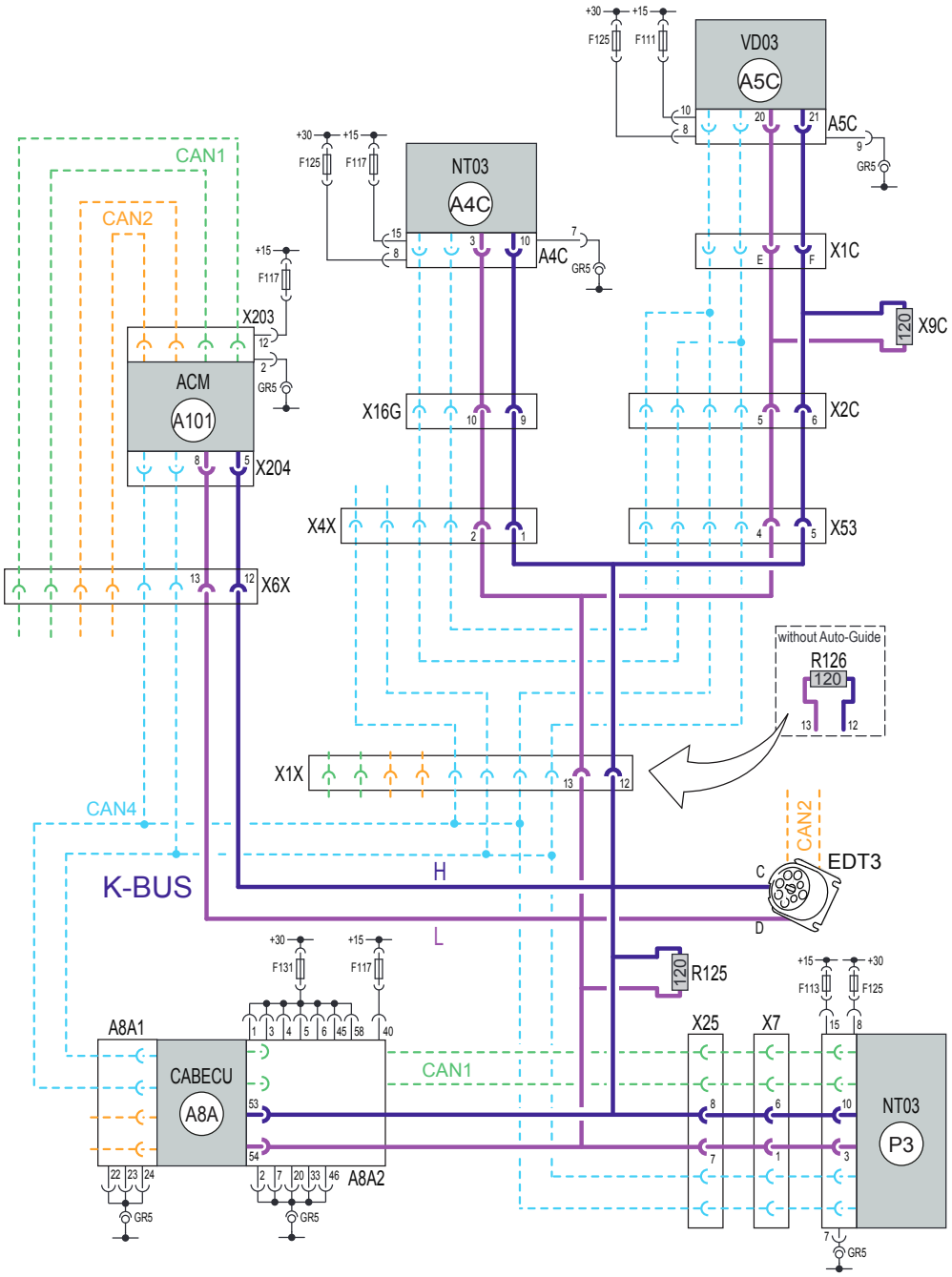

2.1.8 CAN connectors

T4 1A7

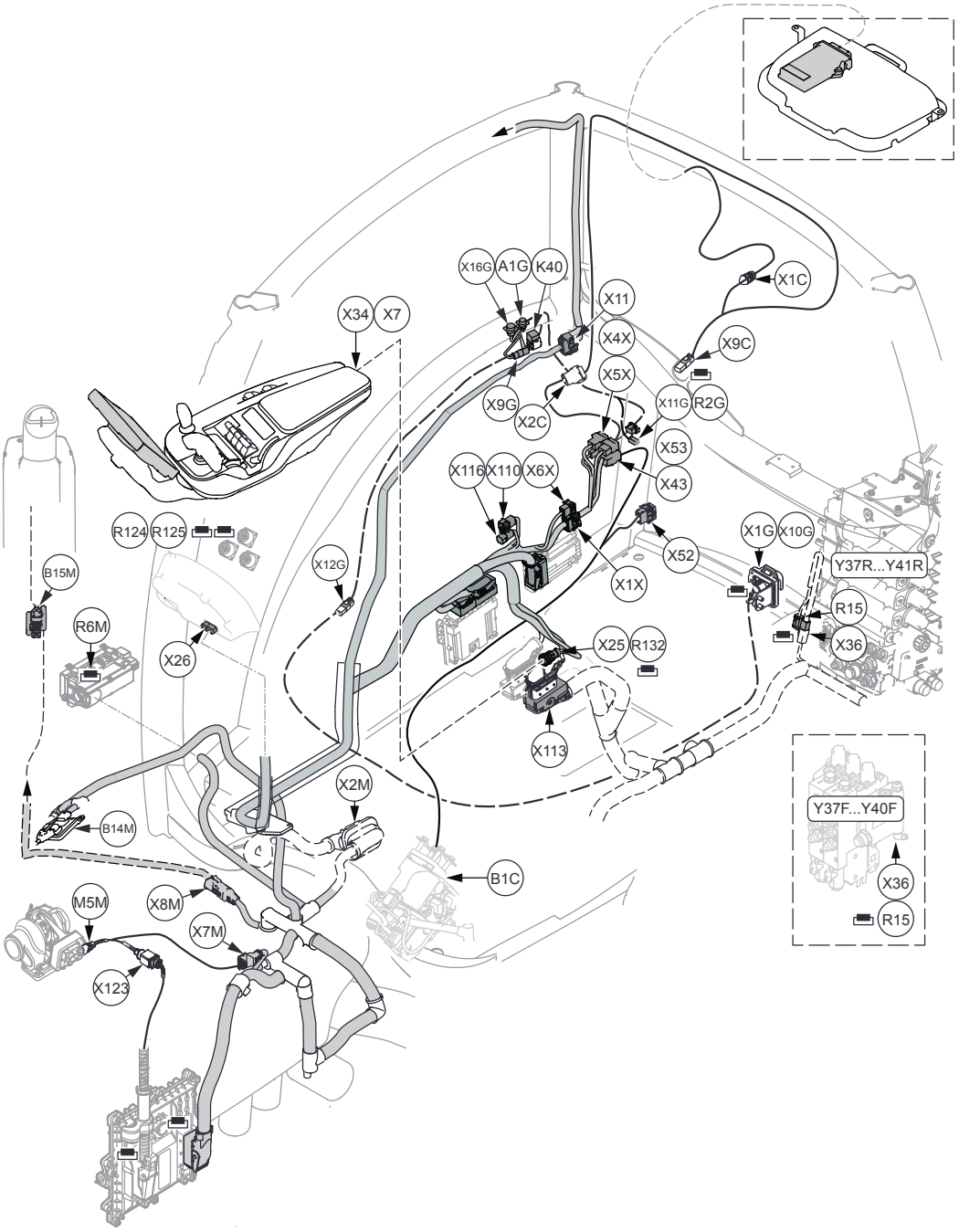

N4 1B7

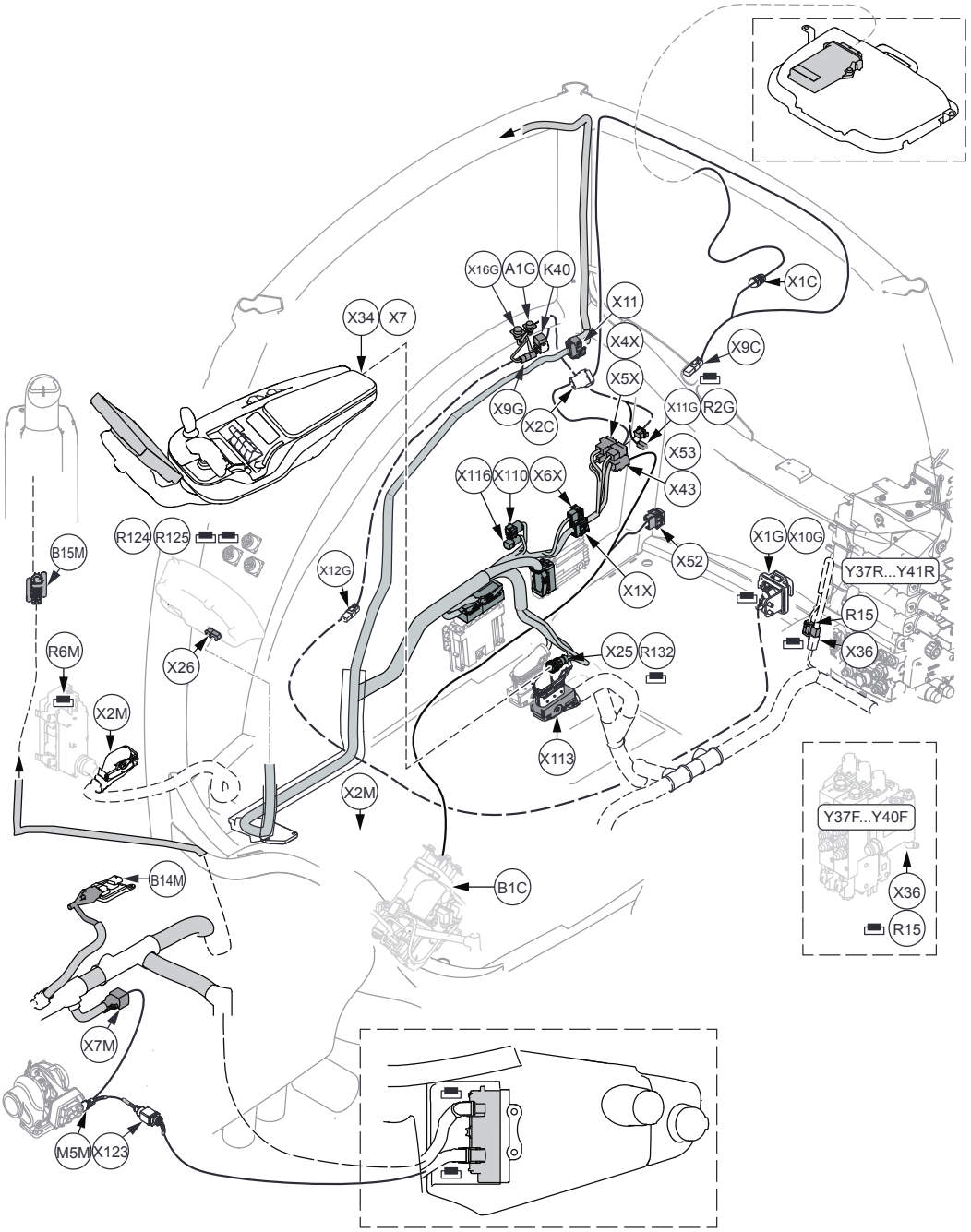

Symbol	Description
A1G	ISOBUS terminal interface
B1C	Sensor, steering angle (SASA), front
B14M	Sensor, NOx upstream
B15M	Sensor, NOx downstream
K40	Relay, ISOBUS CAN4 split
M5M	Actuator, waste gate
R2G	Terminating resistor module, ISOBUS
R6M	Terminating resistor CAN3, engine end
Table continued on next page	

Symbol	Description
R15	Terminating resistor, CAN2, valve end
R124	Terminating resistor, CAN2
R125	Terminating resistor, KBUS
R132	Terminating resistor, CAN1
X1C	Connector, top dock interface
X1G	Connector, ISOBUS ISO box (ISO11783), power, rear
X1X	Connector, options
X2C	Connector, Autosteering harness cabin – roof
X2M	Connector, engine – cab
X4X	Connector, ISOADAPTER and ISOBUS interface
X5X	Connector, ISO-adapter
X6X	Connector, telemetry
X7	Connector, SmartTouch display
X7M	Connector, cross-wiring, tractor – engine
X8M	Connector, exhaust pipe
X9C	Connector, Autosteering KBUS terminating resistor
X9G	Connector, Autosteering bus interface
X10G	Connector, ISOBUS ISO box (ISO11783), CAN, rear
X11	Connector, cab – inner roof
X11G	Connector, ISOBUS ISO box (ISO11783), CAN, front
X12G	Connector, ISOBUS CAN out, rear
X16G	Connector, ISOBUS interface – additional SmartTouch display
X25	Connector, seat
X26	Connector, instrument panel
X34	Connector, armrest
X36	Connector, CAN-valve harness
X43	Connector, cab – TwinTrac
X52	Connector, TwinTrac control devices
X53	Connector, Autosteering control devices
X110	Connector, LHLink supply (not in use)
X113	Connector, transmission connector 2
X116	Connector, cabin suspension
X123	Connector, engine - actuators
Y37	Auxiliary hydraulic valve, AUX 1
Y38	Auxiliary hydraulic valve, AUX 2
Y39	Auxiliary hydraulic valve, AUX 3
Y40	Auxiliary hydraulic valve, AUX 4
Y41	Auxiliary hydraulic valve, AUX 5

2.2 Versu Direct T4 1B8 & N4 1C8

2.2.1 Automation configuration

Model	Automation configuration	Standard control units	CAN ID	
T4 1B8 N4 1C8 Versu Direct	AC 35.6 AC 34.6	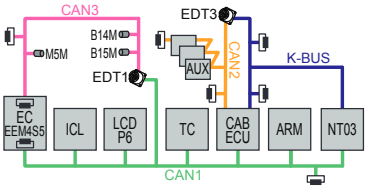	EC = 0 ICL = 23 LCD = 59 TC = 3 CABECU CAN1 = 49 CABECU CAN2 = 49, 16 CABECU K-BUS = – CABECU CAN4 = 240 ARM = 5 NT03 = – M5M (WASTE GATE)= 131 B14M, B15M (NOx) = 81, 82	AUX1 =129 AUX2 =130 AUX3 =131 AUX4 =132 AUX5 =133 AUX1F =135 AUX2F =136 AUX3F =137 AUX4F =138

Abbreviation	Description
EC	ECU, EC (engine control unit)
ICL	Instrument panel
LCD	A-pillar display (P6)
TC	ECU, TC (transmission control unit)
CABECU	ECU, CABECU (cab control unit)
ARM	SmartTouch armrest
NT03	SmartTouch display
AUX	Auxiliary hydraulic valve
EDT1	Diagnostic connector 1
EDT3	Diagnostic connector 3
B14M, B15M	NOx sensors
M5M	Actuator, waste gate

Additional equipment	Description	CAN ID
VD03	Auto-Guide navigation controller	–
PVED-CC	Steering valve	PVED-CC = 143
SASA	Sensor, steering angle (SASA), front	SASA = 769
TWINTRAC	Steering unit, rear	TWINTRAC = 772
ACM	Agco Connectivity Module (telemetry)	AGCOMMAND = 74
A9	Valtra Connect (telemetry)	–
NT03	Additional display for Auto-Guide and ISOBUS	–
ISOAD	ECU, ISO adapter (implement signal connection ISO11786)	ISOAD = 220
EDT2	Diagnostic connector 2	-
AUTO HVAC	Control panel, AUTO HVAC	AUTO HVAC = 25
Table continued on next page		

Additional equipment	Description	CAN ID
LCD	C-pillar display (P7)	LCD = 60
RADIO	Radio	RADIO = 76
SUS1	ECU, SUS1, AutoComfort	SUS1 = 47

2.2.2 CAN bus structure

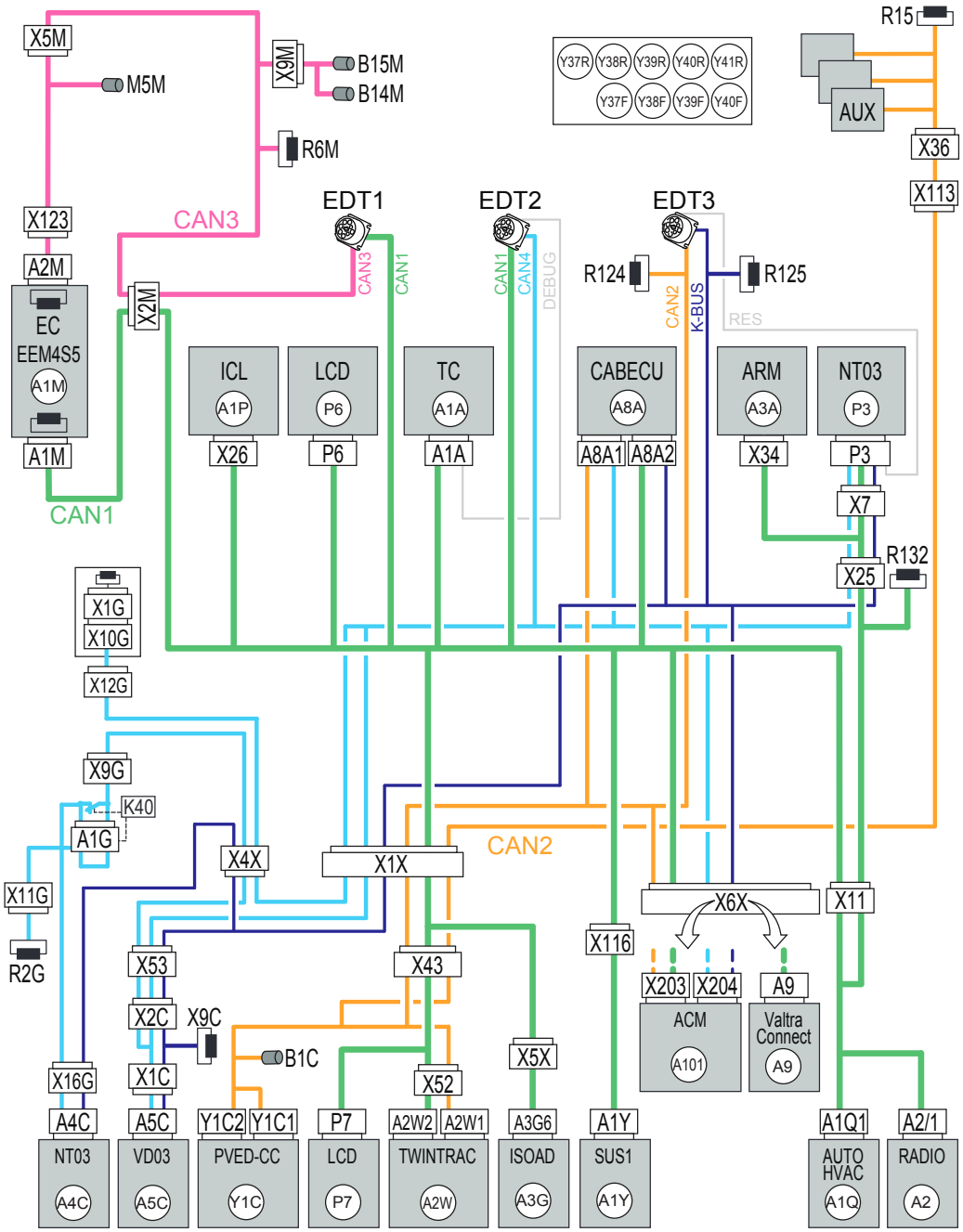

Control unit	Description	CAN ID	Connector / PIN	Functions
A1A	ECU, TC (transmission control unit)	TC = 3	A1A: CAN1_L = 27 CAN1_H = 28 DEBUG_L = 49 (factory use only) DEBUG_H = 50 (factory use only) +30 (F125): 1 +30 (F132) : 3, 5 Power GND: 2, 4, 6	transmission control power take-off Sigma power hydraulic assistant parking brake ensure emergency brake brake cooling diagnostics services calibration procedures Valtra Power Management fan control rear linkage control
A1G	ISOBUS terminal interface (additional equipment)	-	A1G: CAN4_L = 2, 3 CAN4_H = 4, 5 +30 (F51 / K33) : 1, 7 Power GND: 9	ISOBUS terminal interface
A1M	ECU, EC (engine control unit)	EC = 0	A1M (tractor): CAN1_L = 47 CAN1_H = 46 +BAT (F2M; F3M / V1M): 1, 25, 26, 49, 73 Power GND: 3, 5, 28, 29, 52, 75, 76 A2M (engine): CAN3_L = 18 CAN3_H = 17 Power GND: 78	rpm torque preheater fuel injection fan emission control
A1P	Instrument panel	ICL = 23	X26: CAN1_L = 13 CAN1_H = 12 Power GND: 22 X27: +15 (F112): 21 +30 (F9M): 10 +BAT (F118): 3 Power GND: 5	indicator lights indicator gauges information display clock vehicle hours
A1Q	Control panel, AUTO HVAC (additional equipment)	AUTO HVAC = 25	A1Q1: CAN1_L = 16 CAN1_H = 7 +15 (F16): 15 +30 (F23): 9 Power GND: 1	Automatic air conditioning
A1Y	ECU, SUS1, Autocomfort (additional equipment)	SUS1 = 47	A1Y: CAN1_L = 39 CAN1_H = 40 +15 (F105): 14, 42 +30 (F122): 1, 9, 29 Power GND: 15, 28	Cab suspension Front axle suspension
A2	Radio (additional equipment)	RADIO = 76	A2/1: CAN1_L = 3 CAN1_H = 1 +30 (F13): 4 +BAT (F118): 7 Power GND: 8	Radio

Table continued on next page

Control unit	Description	CAN ID	Connector / PIN	Functions
A2W	Steering unit, rear (additional equipment)	TWIN TRAC = 772	A2W1: CAN2_L = 4 CAN2_H = 3 +15 (F105): 1 Power GND: 2 A2W2: CAN1_L = 6 CAN1_H = 5 +15 (F117): 1 Power GND: 2	Steering unit, rear
A3A	SmartTouch armrest	ARM = 5	X34: CAN1_L = 8 CAN1_H = 7 +15 (F113): 1 +30 (F125): 3 Power GND: 5	User interface for tractor functions
A3G	ECU, ISO adapter (additional equipment)	ISOAD = 220	A3G1: +15 (F117): 1 Power GND: 2 A3G2: +15 (F117): 6 A3G6: CAN1_L = 2 CAN1_H = 3	Link between tractor and implement signal interface (ISO11786)
A4C	Additional display for ISOBUS	–	A4C: CAN4_L = 5 CAN4_H = 12 KBUS_L = 3 KBUS_H = 10 +15 (F117): 15 +30 (F125) : 8 Power GND: 7	Additional display for ISOBUS and camera
A5C	Auto-Guide navigation controller	–	A5C: CAN4_L = 22 CAN4_H = 23 KBUS_L = 20 KBUS_H = 21 +15 (F111): 10 +30 (F125) : 8 Power GND: 9	Auto-Guide navigation controller
Table continued on next page				

Control unit	Description	CAN ID	Connector / PIN	Functions
A8A	ECU, CABECU (cab control unit)	CABECU CAN1 = 49 CABECU CAN2 = 49, 16 CABECU K-BUS = – CABECU CAN4 = 240	A8A1: CAN2_L = 62 CAN2_H = 63 CAN4_L = 60 CAN4_H = 61 Power GND: 22, 23, 24 A8A2: CAN1_L = 16 CAN1_H = 15 KBUS_L = 54 KBUS_H = 53 +15 (F117): 40 +30 (F131): 1, 3, 4, 5, 6, 45, 58 Power GND: 2, 7, 20, 33, 46	parking brake control front PTO control working lights control radio remote control hydraulics control U-Pilot control driving direction control 4wd automatics differential lock automatics diagnostics services: calibrations, IO-test link between CAN buses (CAN1...CAN4) and display/armrest bus (KBUS) Softdrive Bucket release Selecto 3 Selecto 4 Auto-Guide control TwinTrac control QuickSteer control ISO 11783 signal interface (ISOBUS)
A9	ECU, Valtra Connect (additional equipment)	—	A9 CAN1_L = 7 CAN1_H = 6 +15 (F117): 3 Power GND: 1	Telemetry
A101	AGCO Connectivity Module (ACM) (additional equipment)	AGCOMMAND = 74	X203: CAN1_L = 7 CAN1_H = 6 CAN2_L = 8 CAN2_H = 5 +15 (F117): 12 Power GND: 2 X204: CAN4_L = 7 CAN4_H = 6 KBUS_L = 8 KBUS_H = 5	Telemetry
B1C	Sensor, steering angle (SASA), front (additional equipment)	SASA = 769	B1C: CAN2_L = 1 CAN2_H = 4	Sensor, steering angle (SASA), front
B14M	Sensor, NOx upstream	NOx1 = 81	B14M: CAN3_L = 3 CAN3_H = 4	Sensor, NOx upstream
B15M	Sensor, NOx downstream	NOx2 = 82	B15M: CAN3_L = 3 CAN3_H = 4	Sensor, NOx downstream
EDT1	Diagnostic connector 1	–	EDT1: CAN1_L = D CAN1_H = C CAN3_L = J CAN3_H = H	Diagnostic connector 1: CAN1 (tractor) CAN3 (engine)

Table continued on next page

Control unit	Description	CAN ID	Connector / PIN	Functions
EDT2	Diagnostic connector 2	–	EDT2: CAN1_L = D CAN1_H = C CAN4_L = J CAN4_H = H DEBUG_L = F (factory use only) DEBUG_H = E (factory use only)	Diagnostic connector 2: CAN1 (tractor) CAN4 (implement) DEBUG (factory use only)
EDT3	Diagnostic connector 3	–	EDT3: CAN2_L = J CAN2_H = H KBUS_L = D KBUS_H = C	Diagnostic connector 3: CAN2 (hydraulics) KBUS (display, armrest)
K40	ISOBUS CAN split relay	–	K40: CAN4_L = 5, 6 CAN4_H = 1, 4	ISOBUS CAN split relay relay contacts are open when the additional display for Auto-Guide and ISOBUS is connected
M5M	Actuator, waste gate	WASTE GATE = 131	M5M: CAN3_L = 3 CAN3_H = 4	Actuator, waste gate
P3	SmartTouch display	NT03 = –	P3: CAN1_L = 4 CAN1_H = 11 CAN4_L = 5 CAN4_H = 12 KBUS_L = 3 KBUS_H = 10 +15 (F113): 15 +30 (F125): 8 Power GND: 7	information display transmission and hydraulics settings U-Pilot display and editor profiles map Auto-Guide user interface ISOBUS user interface camera display
P6	A-pillar display	LCD = 59	P6: CAN1_L = 8 CAN1_H = 1 +15 (F109): 2 +30 (F126): 5 Power GND: 3	TC status display DEF level display I/O test section
P7	C-pillar display (additional equipment)	LCD = 60	P7: CAN1_L = 8 CAN1_H = 1 +15 (F105): 2 Power GND: 3	TC status display DEF level display I/O test section
R2G	Terminating resistor module, ISOBUS	–		Terminating resistor module, ISOBUS
R6M	Terminating resistor, CAN3, engine end	–		Terminating resistor, CAN3, engine end
R15	Terminating resistor, CAN2, valve end	–		Terminating resistor, CAN2, valve end
R124	Terminating resistor, CAN2	–		Terminating resistor, CAN2
R125	Terminating resistor, KBUS	–		Terminating resistor, KBUS
R126	Terminating resistor, KBUS (without Auto-Guide)	–		Terminating resistor, KBUS (without Auto-Guide)

Table continued on next page

Control unit	Description	CAN ID	Connector / PIN	Functions
R132	Terminating resistor, CAN1	–		Terminating resistor, CAN1
X9C	Terminating resistor, KBUS (with Auto-Guide)	–		Terminating resistor, KBUS (with Auto-Guide)
X1C	Connector, top dock interface	–	X1C: CAN4_L = C CAN4_H = D KBUS_L = E KBUS_H = F	Connector, top dock interface
X1G	Connector, ISOBUS ISO BOX (ISO11783), rear	–		Connector, ISOBUS ISO BOX (ISO11783), rear
X1X	Connector, options	–	X1X: CAN1_L = 6 CAN1_H = 5 CAN2_L = 9, 11 CAN2_H = 8, 10 CAN4_L = 4, 21 CAN4_H = 3, 22 KBUS_L = 13 KBUS_H = 12	Connector, options
X2C	Connector, autosteering harness cab – roof	–	X2C: CAN4_L = 2, 3 CAN4_H = 4, 9 KBUS_L = 5 KBUS_H = 6	Connector, autosteering harness cab – roof
X2M	Connector, engine – cab	–	X2M: CAN1_L = 6 CAN1_H = 5 CAN3_L = 31 CAN3_H = 30	Connector, engine – cab
X4X	Connector, ISOBUS interface	–	X4X: CAN4_L = 7, 4 CAN4_H = 6, 3 KBUS_L = 2 KBUS_H = 1	Connector, ISOBUS interface
X5M	Connector, cross-wiring tractor - engine	–	X5M: CAN3_L = 3 CAN3_H = 4	Connector, cross-wiring tractor - engine
X5X	Connector, ISO-adapter	–	X5X: CAN1_L = 4 CAN1_H = 3	Connector, ISO-adapter
X6X	Connector, telemetry	–	X6X: CAN1_L = 4 CAN1_H = 3 CAN2_L = 10 CAN2_H = 11 CAN4_L = 9 CAN4_H = 8 KBUS_L = 13 KBUS_H = 12	Connector, telemetry
X7	Connector, SmartTouch display	–	X7: CAN1_L = 2 CAN1_H = 7 CAN4_L = 3 CAN4_H = 8 KBUS_L = 1 KBUS_H = 6	Connector, SmartTouch display
X9M	Connector, exhaust pipe	–	X9M: CAN3_L = 3 CAN3_H = 4	Connector, exhaust pipe

Table continued on next page

Control unit	Description	CAN ID	Connector / PIN	Functions
X9G	Connector, autosteering bus extension	–	X9G: CAN4_L = 4 CAN4_H = 2	Connector, autosteering bus extension
X11	Connector, cab – inner roof	–	X11: CAN1_L = 8, 35 CAN1_H = 7, 34	Connector, cab – inner roof
X10G	Connector, ISOBUS ISO box (ISO11783), CAN, rear		X10G: CAN4_L = 4 CAN4_H = 2	Connector, ISOBUS ISO box (ISO11783), CAN, rear
X11G	Connector, ISOBUS ISO BOX (ISO11783), CAN, front	–	X11G: CAN4_L = 4 CAN4_H = 2	Connector, ISOBUS ISO BOX (ISO11783), CAN, front
X12G	Connector, ISOBUS CAN out, rear	–	X12G: CAN4_L = 4 CAN4_H = 2	Connector, ISOBUS CAN out, rear
X16G	Connector, ISOBUS interface – additional SmartTouch display	–	X16G: CAN4_L = 2 CAN4_H = 1 KBUS_L = 10 KBUS_H = 9	Connector, ISOBUS interface – additional SmartTouch display
X25	Connector, seat	–	X25: CAN1_L = 6 CAN1_H = 5 CAN4_L = 9 CAN4_H = 10 KBUS_L = 7 KBUS_H = 8	Connector, seat
X36	Connector, CAN-valve harness	–	X36: CAN2_L = 4 CAN2_H = 2	Connector, CAN-valve harness
X43	Connector, cab – TwinTrac	–	X43: CAN1_L = 1 CAN1_H = 2 CAN2_L = 3, 5 CAN2_H = 4, 6	Connector, cab – TwinTrac
X52	Connector, TwinTrac control devices	–	X52: CAN1_L = 5 CAN1_H = 4 CAN2_L = 8 CAN2_H = 7	Connector, TwinTrac control devices
X53	Connector, autosteering control devices	–	X53: CAN4_L = 7, 9 CAN4_H = 8, 10 KBUS_L = 4 KBUS_H = 5	Connector, autosteering control devices
X113	Connector, transmission connector 2	–	X113: CAN2_L = 2 CAN2_H = 1	Connector, transmission connector 2
X116	Connector, cabin suspension	–	X116: CAN1_L = 2 CAN1_H = 5	Connector, cabin suspension
X123	Connector, engine – actuators	–	X123: CAN3_L = 4 CAN3_H = 3	Connector, engine – actuators

Table continued on next page

Control unit	Description	CAN ID	Connector / PIN	Functions
Y1C	Steering valve (additional equipment)	PVED-CC = 143	Y1C1: CAN2_L = 1 CAN2_H = 4 Y1C2: CAN2_L = 1 CAN2_H = 4	Auto-Guide QuickSteer TwinTrac
Y37R...Y41R	Auxiliary hydraulic valve, rear AUX 1–5	AUX1 =129 AUX2 =130 AUX3 =131 AUX4 =132 AUX5 =133	Y37R...Y41R: CAN2_L = B CAN2_H = A +30 (F123 / K4): D Power GND: C	Digital valve control: spool positioning diagnostics
Y37F...Y40F	Auxiliary hydraulic valve, front AUX 1-4 (additional equipment)	AUX1F =135 AUX2F =136 AUX3F =137 AUX4F =138	Y37F...Y40F: CAN2_L = B CAN2_H = A +30 (F123 / K4): D Power GND: C	Digital valve control: spool positioning diagnostics

2.2.3 CAN1 structure

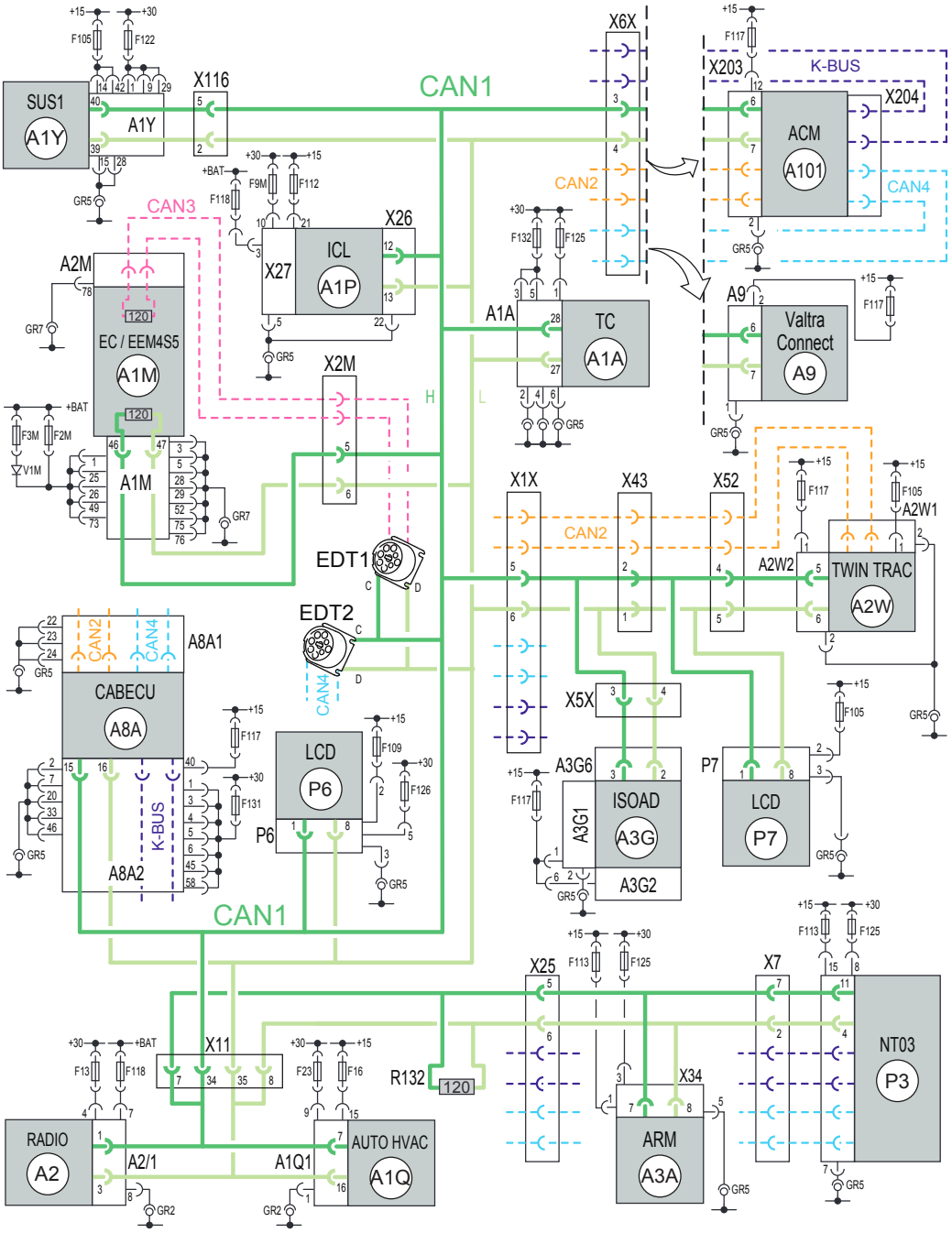

2.2.4 CAN2 structure

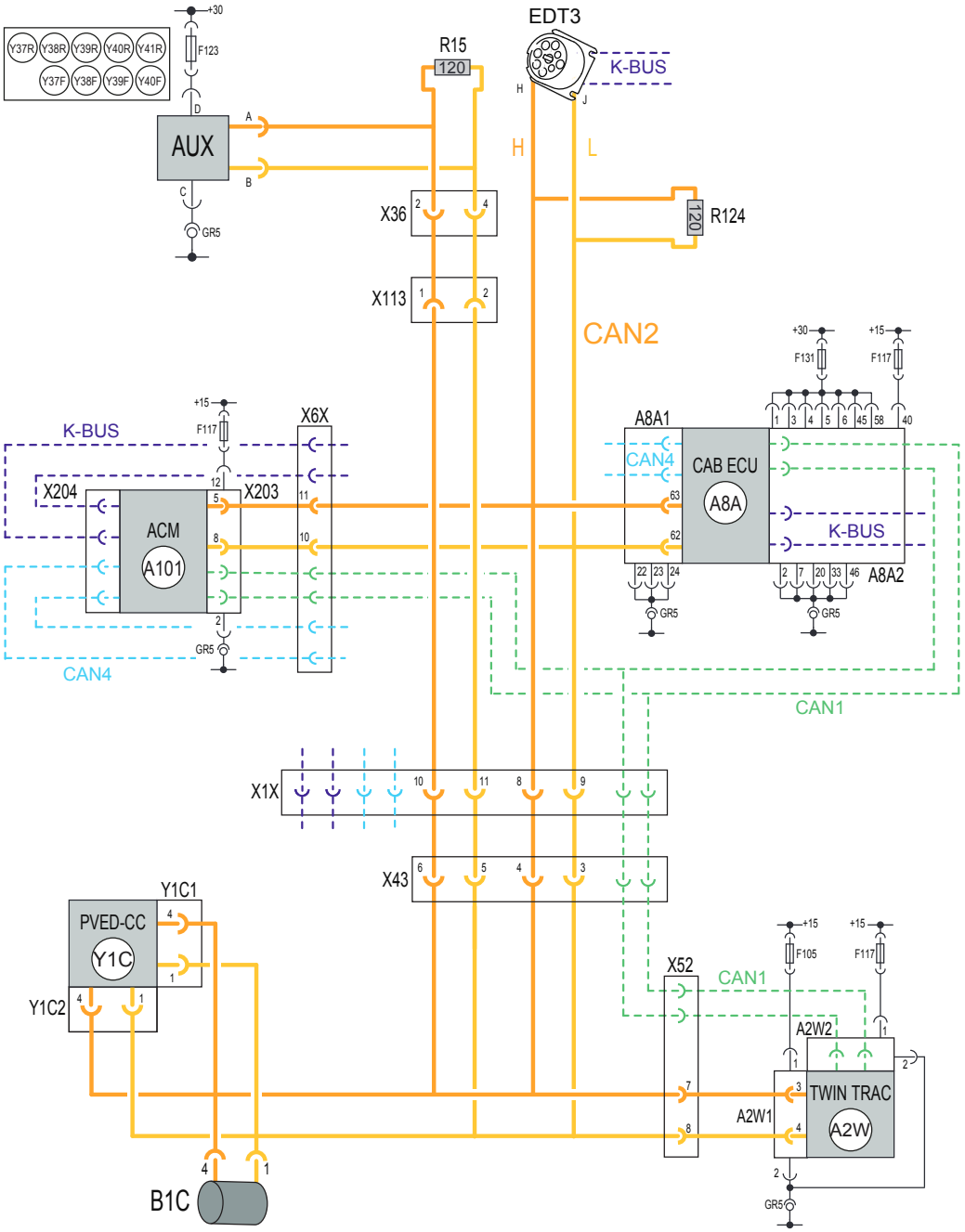

2.2.5 CAN3 structure

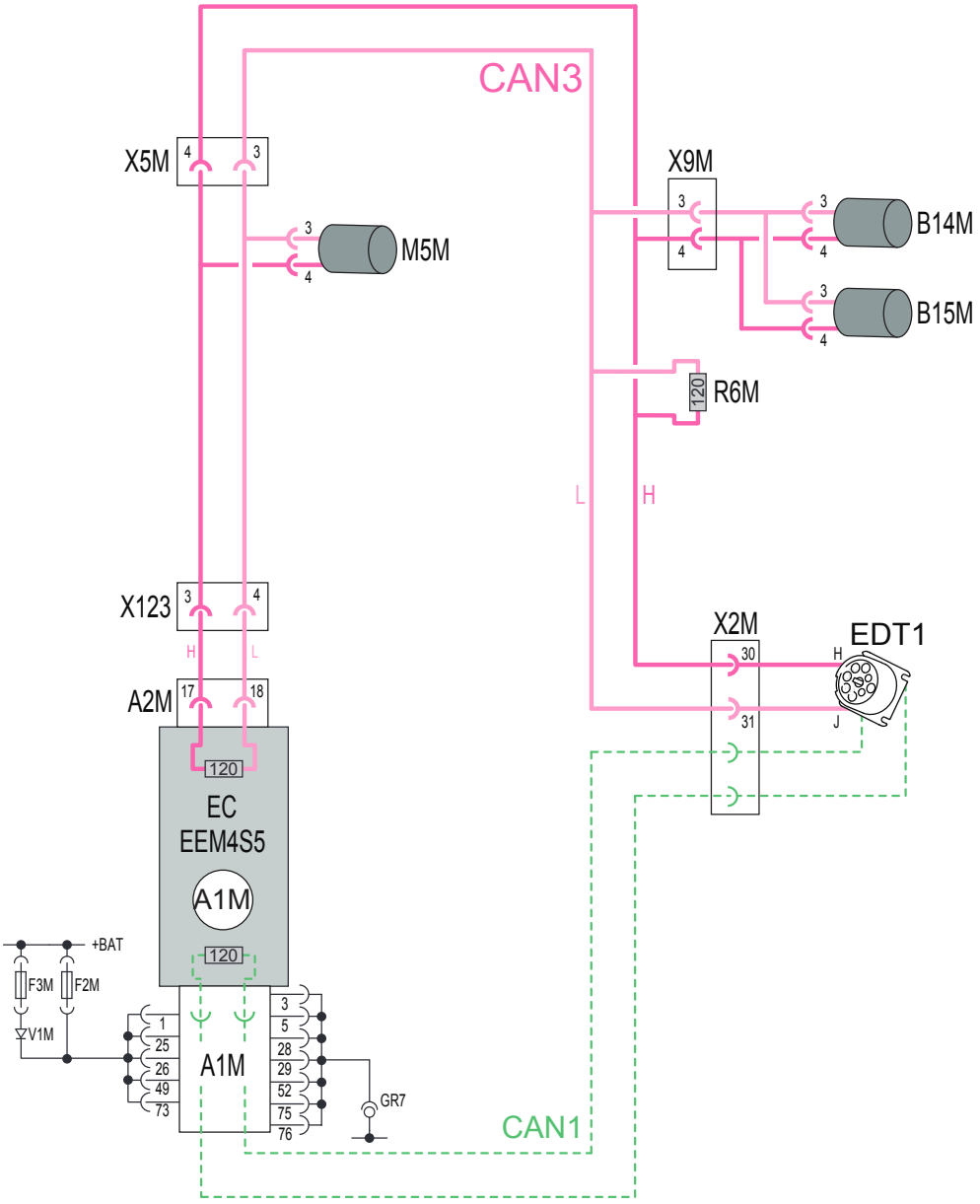

2.2.6 CAN4 structure

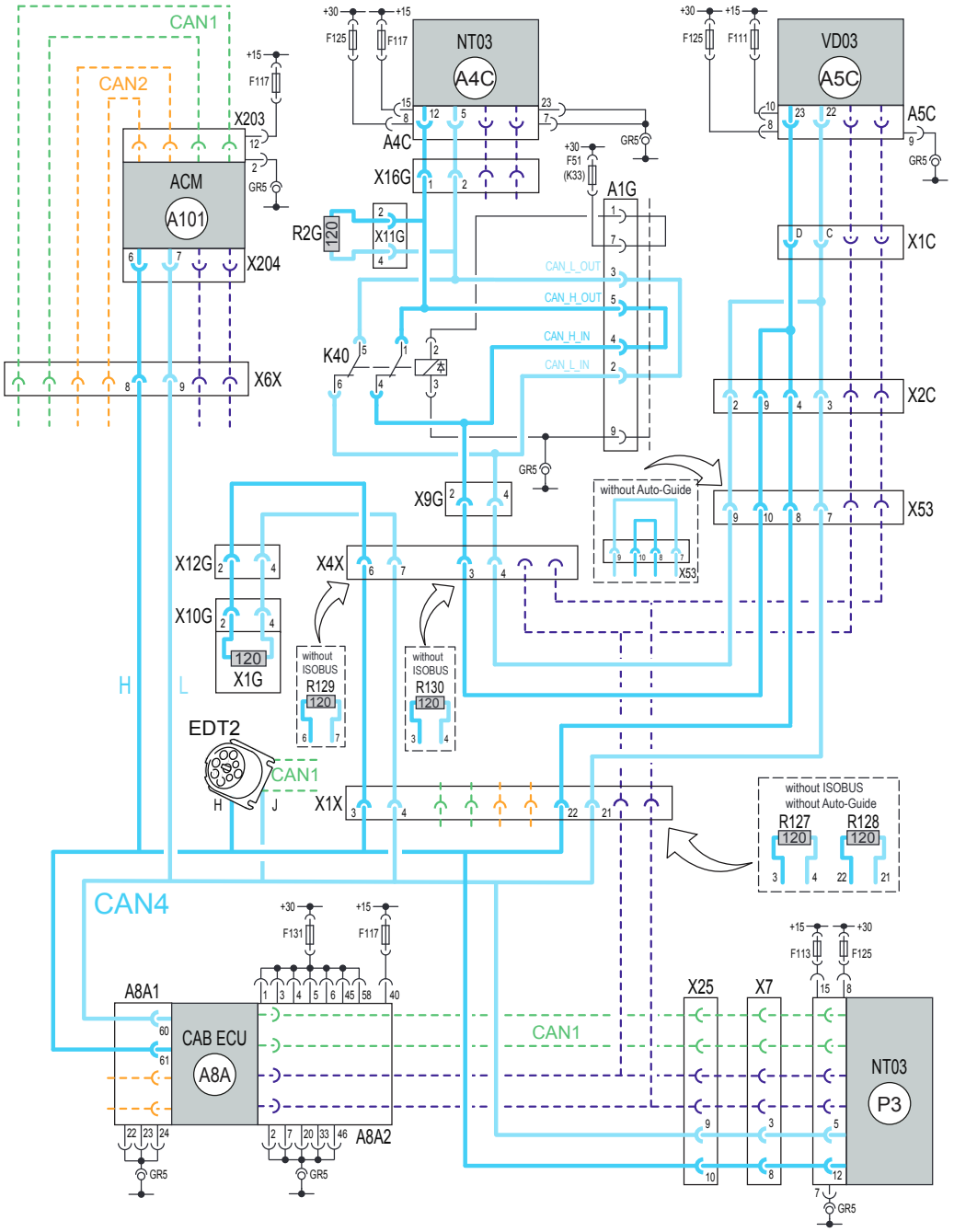

2.2.7 KBUS structure

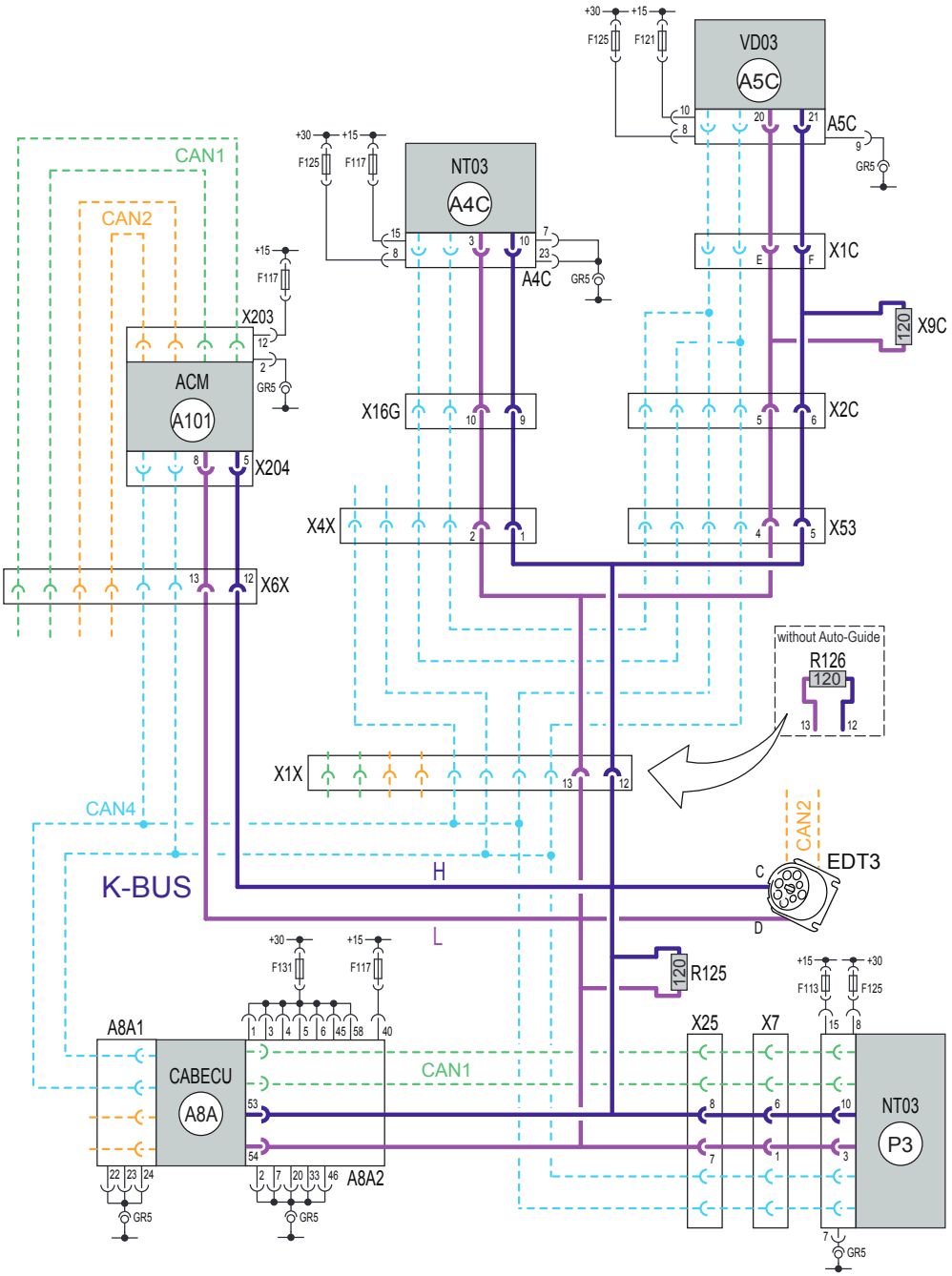

2.2.8 CAN connectors

T4 1B8

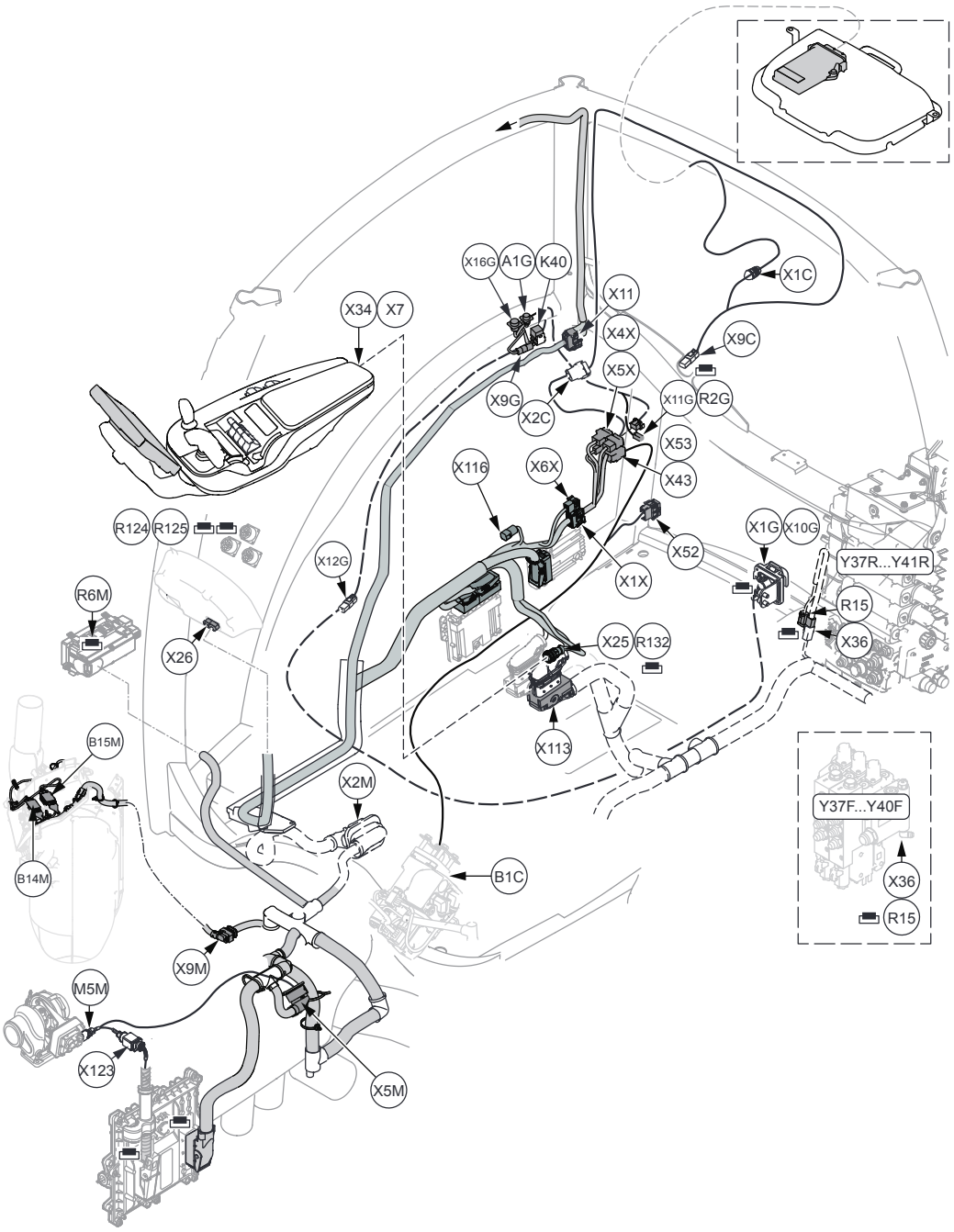

N4 1C8

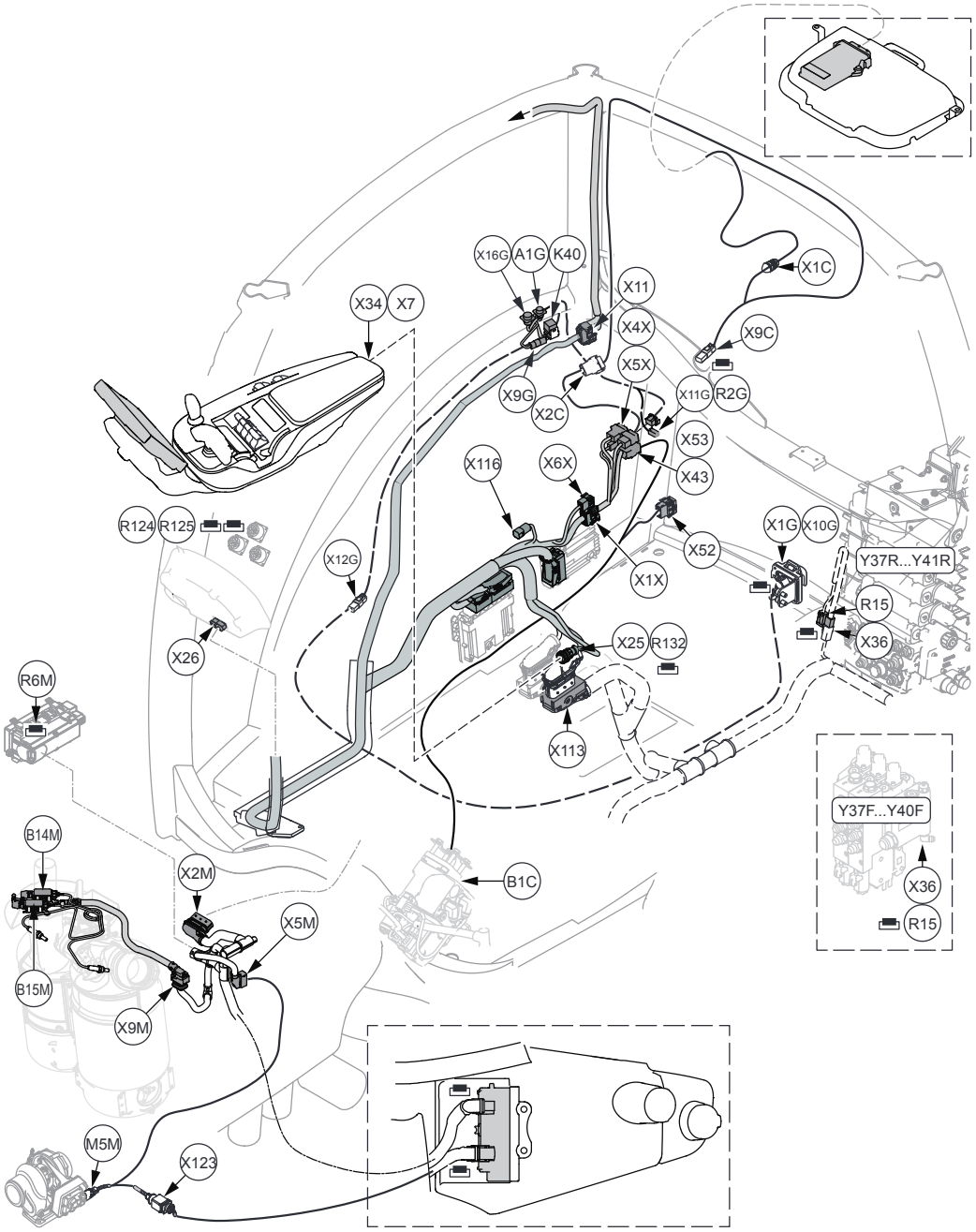

Symbol	Description
A1G	ISOBUS terminal interface
B1C	Sensor, steering angle (SASA), front
B14M	Sensor, NOx upstream
B15M	Sensor, NOx downstream
K40	Relay, ISOBUS CAN4 split
M5M	Actuator, waste gate
R2G	Terminating resistor module, ISOBUS
R6M	Terminating resistor CAN3, engine end
R15	Terminating resistor, CAN2, valve end
Table continued on next page	

Symbol	Description
R124	Terminating resistor, CAN2
R125	Terminating resistor, KBUS
R132	Terminating resistor, CAN1
X1C	Connector, top dock interface
X1G	Connector, ISOBUS ISO box (ISO11783), power, rear
X1X	Connector, options
X2C	Connector, Autosteering harness cabin – roof
X2M	Connector, engine – cab
X4X	Connector, ISOADAPTER and ISOBUS interface
X5M	Connector, cross-wiring, tractor - engine
X5X	Connector, ISO-adapter
X6X	Connector, telemetry
X7	Connector, SmartTouch display
X9C	Connector, Autosteering KBUS terminating resistor
X9G	Connector, Autosteering bus interface
X9M	Connector, exhaust pipe
X10G	Connector, ISOBUS ISO box (ISO11783), CAN, rear
X11	Connector, cab – inner roof
X11G	Connector, ISOBUS ISO box (ISO11783), CAN, front
X12G	Connector, ISOBUS CAN out, rear
X16G	Connector, ISOBUS interface – additional SmartTouch display
X25	Connector, seat
X26	Connector, instrument panel
X34	Connector, armrest
X36	Connector, CAN-valve harness
X43	Connector, cab – TwinTrac
X52	Connector, TwinTrac control devices
X53	Connector, Autosteering control devices
X113	Connector, transmission connector 2
X116	Connector, cabin suspension
X123	Connector, engine - actuators
Y37	Auxiliary hydraulic valve, AUX 1
Y38	Auxiliary hydraulic valve, AUX 2
Y39	Auxiliary hydraulic valve, AUX 3
Y40	Auxiliary hydraulic valve, AUX 4
Y41	Auxiliary hydraulic valve, AUX 5

2.3 HiTech Active T4 1A7 & N4 1B7

2.3.1 Automation configuration

Model	Automation configuration	Standard control units	CAN ID	
T4 1A7 N4 1B7 Active Hitech (with armrest)	AC 37.5 AC 36.5	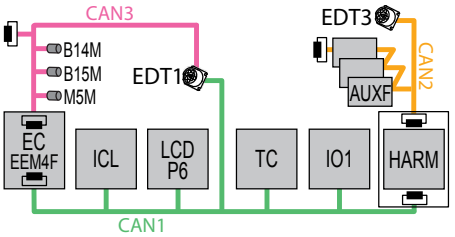	EC = 0 ICL = 23 LCD = 59 TC = 3 IO1 = 4 HARM = 5	AUX1F =135 AUX2F =136 AUX3F =137 AUX4F =138
T4 1A7 N4 1B7 Active Hitech (with basic controls)	AC 37.51 AC 36.51	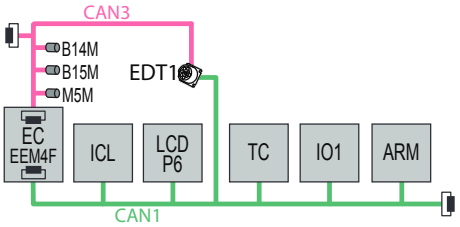	EC = 0 ICL = 23 LCD = 59 TC = 3 IO1 = 4 ARM = 5	

Abbreviation	Description
EC	ECU, EC (engine control unit)
ICL	Instrument panel
LCD	A-pillar display (P6)
TC	ECU, TC (transmission control unit)
IO1	ECU, IO1
ARM	ECU, ARM (basic controls)
HARM	ECU, HARM (hydraulic armrest control unit)
AUX	Auxiliary hydraulic valve
EDT1	Diagnostic connector 1
EDT3	Diagnostic connector 3
B14M, B15M	NOx sensors
M5M	Actuator, waste gate

Additional equipment	Description	CAN ID
AGI-4	ECU, Topdock, Auto-Guide	AGI-4 = 28
AUTO HVAC	Control panel, AUTO HVAC	AUTO HVAC = 25
EDT2	Diagnostic connector 2	—
IO2	ECU, IO2	IO2 = 49
ISOAD	ECU, ISO adapter (implement signal connection ISO11786)	ISOAD = 220
LCD	C-pillar display (P7)	LCD = 60
PVED-CL	Steering valve	PVED-CL = 19
SASA	Sensor, steering angle (SASA), front	SASA = 769
SECU	ECU, SECU, steering	SECU = 50

Table continued on next page

Additional equipment	Description	CAN ID
SUS1	ECU, SUS1, AutoComfort	SUS1 = 47
TECU	ECU, ISOBUS, TECU (ISO11783)	TECU = 221
TWIN TRAC	Steering unit, rear (with armrest)	TWIN TRAC = 772

2.4 HiTech Active T4 1A7 & N4 1B7 with hydraulic armrest

2.4.1 CAN bus structure with armrest

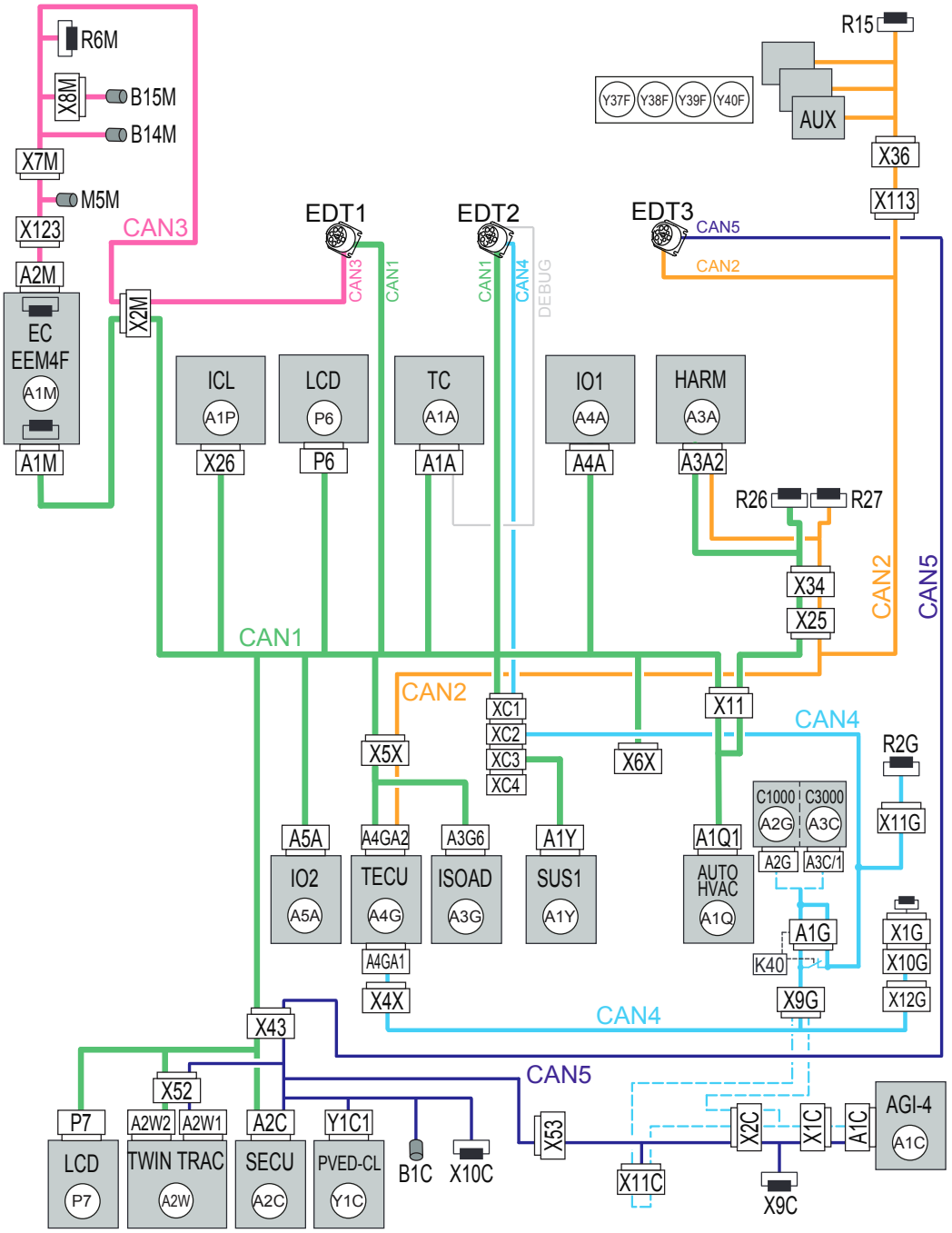

Control unit	Description	CAN ID	Connector / PIN	Functions
A1A	ECU, TC (transmission control unit)	TC = 3	A1A: CAN1_L = 27 CAN1_H = 28 DEBUG_L = 49 (factory use only) DEBUG_H = 50 (factory use only) +30 (F125): 1 +30 (F132) : 3, 5 Power GND: 2, 4, 6	transmission control power take-off Sigma power cruise control hydraulic assistant parking brake emergency brake calibration procedures Valtra Power Management fan control rear linkage control
A1C	ECU, Topdock, Auto-Guide (additional equipment)	AGI-4 = 28	A1C: CAN4_L = 4 CAN4_H = 3 CAN5_L = 6 CAN5_H = 5 +15 (F111): 12 SECU input = 1, 7 Power GND: 2, 8	Auto-Guide topdock
A1G	ISOBUS terminal interface (additional equipment)	-	A1G: CAN4_L = 2, 3 CAN4_H = 4, 5 +30 (F51 / K33) : 1, 7 Power GND: 9	ISOBUS terminal interface
A1M	ECU, EC (engine control unit)	EC = 0	A1M (tractor): CAN1_L = 47 CAN1_H = 46 +BAT (F2M / F3M): 1, 25, 26, 49, 73 Power GND: 3, 5, 28, 29, 52, 75, 76 A2M (engine): CAN3_L = 18 CAN3_H = 17 Power GND: 78	rpm torque preheater fuel injection fan emission control
A1P	Instrument panel	ICL = 23	X26: CAN1_L = 13 CAN1_H = 12 Power GND: 22 X27: +15 (F112): 21 +30 (F9M): 10 Power GND: 5	indicator lights indicator gauges information display clock vehicle hours
A1Q	Control panel, AUTO HVAC (additional equipment)	AUTO HVAC = 25	A1Q1: CAN1_L = 16 CAN1_H = 7 +15 (F16): 15 +30 (F23): 9 Power GND: 1	Automatic air conditioning
A1Y	ECU, SUS1, Autocomfort (additional equipment)	SUS1 = 47	A1Y: CAN1_L = 39 CAN1_H = 40 +15 (F105): 14, 42 +30 (F122): 1, 9, 29 Power GND: 15, 28	Cab suspension Front axle suspension
Table continued on next page				

Control unit	Description	CAN ID	Connector / PIN	Functions
A2C	ECU, SECU, steering (additional equipment)	SECU = 50	A2C: CAN1_L = 39 CAN1_H = 40 CAN5_L = 27 CAN5_H = 13 +15 (F105): 14, 42 +30 (F122): 1, 9, 29 Power GND: 15, 28	steering control reverse drive system control steering valve power control (PVED-CL) steering sensor power control read inputs from pedals, shuttle lever and seat direction
A2G	C1000 terminal (additional equipment)	–	A2G: CAN4_L = 9 CAN4_H = 8 +30 (F51 / K33) : 1, 2 Power GND: 3, 4	C1000 terminal: ISOBUS
A2W	Steering unit, rear (additional equipment)	TWIN TRAC = 772	A2W1: CAN5_L = 4 CAN5_H = 3 +15 (F105): 1 Power GND: 2 A2W2: CAN1_L = 6 CAN1_H = 5 +30 (F122): 1 Power GND: 2	Steering unit, rear
A3A	ECU, HARM (hydraulic armrest control unit	HARM = 5	A3A1: +15 (F113): 8, 9 Power GND: 11 A3A2: CAN1_L = 13 CAN1_H = 12 CAN2_L = 14 CAN2_H = 11 Power GND: 7, 9	powershift input cruise control input hydraulics commands
A3C	C3000 terminal (additional equipment)	–	A3C/1: CAN4_L = 9 CAN4_H = 8 +30 (F51 / K33) : 1 Power GND: 3	C3000 terminal: autosteering
A3G	ECU, ISO adapter (additional equipment)	ISOAD = 220	A3G1: +15 (F117): 1 Power GND: 2 A3G2: +15 (F117): 6 A3G6: CAN1_L = 2 CAN1_H = 3	Link between tractor and implement signal interface (ISO11786)
A4A	ECU, IO1	IO1 = 4	A4A: CAN1_L = 39 CAN1_H = 40 +15 (F110): 14, 42 +30 (F132): 1, 29 +30 (F122): 9 Power GND: 15, 28	IO functions: valve power side panel inputs parking brake ensure

Table continued on next page

Control unit	Description	CAN ID	Connector / PIN	Functions
A4G	ECU, ISOBUS, TECU (additional equipment)	TECU = 221	A4GA1: CAN4_L = 60 CAN4_H = 61 Power GND: 22, 23, 24 A4GA2: CAN1_L = 16 CAN1_H = 15 CAN2_L = 54 CAN2_H = 53 +15 (F117): 40 +30 (F125): 1, 3, 4, 5, 6, 45, 58 Power GND: 2, 7, 20, 33, 46	Link between tractor and implement bus (ISO11783)
A5A	ECU, IO2 (additional equipment)	IO2 = 49	A5A: CAN1_L = 39 CAN1_H = 40 +15 (F110): 14, 42 +30 (F132): 1, 29 +30 (F122): 9 Power GND: 15, 28	IO functions: front PTO output front loader functions
B1C	Sensor, steering angle (SASA), front (additional equipment)	SASA = 769	B1C: CAN5_L = 1 CAN5_H = 4	Sensor, steering angle (SASA), front
B14M	Sensor, NOx upstream	NOx1 = 81	B14M: CAN3_L = 3 CAN3_H = 4	Sensor, NOx upstream
B15M	Sensor, NOx downstream	NOx2 = 82	B15M: CAN3_L = 3 CAN3_H = 4	Sensor, NOx downstream
M5M	Actuator, waste gate	WASTE GATE = 83	M5M: CAN3_L = 3 CAN3_H = 4	Actuator, waste gate
EDT1	Diagnostic connector 1	–	EDT1: CAN1_L = D CAN1_H = C CAN3_L = J CAN3_H = H	Diagnostic connector 1: CAN1 (tractor) CAN3 (engine)
EDT2	Diagnostic connector 2	–	EDT2: CAN1_L = D CAN1_H = C CAN4_L = J CAN4_H = H DEBUG_L = F (factory use only) DEBUG_H = E (factory use only)	Diagnostic connector 2: CAN1 (tractor) CAN4 (implement) DEBUG (factory use only)
EDT3	Diagnostic connector 3	–	EDT3: CAN2_L = J CAN2_H = H CAN5_L = D CAN5_H = C	Diagnostic connector 3: CAN2 (hydraulics) CAN5 (autosteering)
K40	ISOBUS CAN split relay	–	K40: CAN4_L = 5, 6 CAN4_H = 1, 4	ISOBUS CAN split relay relay contacts are open when C1000/ C3000 terminal is connected
P6	A-pillar display	LCD = 59	P6: CAN1_L = 8 CAN1_H = 1 +15 (F109): 2 Power GND: 3	TC status display DEF level display user settings

Table continued on next page

Control unit	Description	CAN ID	Connector / PIN	Functions
P7	C-pillar display (additional equipment)	LCD = 60	P7: CAN1_L = 8 CAN1_H = 1 +15 (F105): 2 Power GND: 3	TC status display DEF level display user settings
X1C	Connector, top dock interface	–	X1C: CAN4_L = C CAN4_H = D CAN5_L = E CAN5_H = F	Connector, top dock interface
X2C	Connector, autosteering harness cab – roof	–	X2C: CAN4_L = 2, 3 CAN4_H = 4, 9 CAN5_L = 5 CAN5_H = 6	Connector, autosteering harness cab – roof
X2M	Connector, engine – cab	–	X2M: CAN1_L = 6 CAN1_H = 5 CAN3_L = 31 CAN3_H = 30	Connector, engine – cab
X4X	Connector, ISO-adapter and ISOBUS interface	–	X4X: CAN4_L = 7 CAN4_H = 6	Connector, ISO-adapter and ISOBUS interface
X5X	Connector, ISO-adapter	–	X5X: CAN1_L = 4 CAN1_H = 3 CAN2_L = 7 CAN2_H = 6	Connector, ISO-adapter
X6X	Connector, telemetry	–	X6X: CAN1_L = 4 CAN1_H = 3	Connector, telemetry
X7M	Connector, cross-wiring tractor - engine	–	X7M: CAN3_L = 6 CAN3_H = 5	Connector, cross-wiring tractor - engine
X8M	Connector, exhaust pipe	–	X8M: CAN3_L = 3 CAN3_H = 4	Connector, exhaust pipe
X9G	Connector, autosteering bus extension	–	X9G: CAN4_L = 4 CAN4_H = 2	Connector, autosteering bus extension
X1G	Connector, ISOBUS ISO BOX (ISO11783), rear	–	X10G: CAN4_L = 4 CAN4_H = 2	Connector, ISOBUS ISO BOX (ISO11783), rear
X11	Connector, cab – inner roof	–	X11: CAN1_L = 8, 35 CAN1_H = 7, 34	Connector, cab – inner roof
X11C	Connector, autosteering interface for 3rd party GPS systems	–	X11C: CAN4_L = 9, 12 CAN4_H = 8, 11 CAN5_L = 7 CAN5_H = 6	Connector, autosteering interface for 3rd party GPS systems
X11G	Connector, ISOBUS ISO BOX (ISO11783), CAN, front	–	X11G: CAN4_L = 4 CAN4_H = 2	Connector, ISOBUS ISO BOX (ISO11783), CAN, front
X12G	Connector, ISOBUS CAN out, rear	–	X12G: CAN4_L = 4 CAN4_H = 2	Connector, ISOBUS CAN out, rear

Table continued on next page

Control unit	Description	CAN ID	Connector / PIN	Functions
X25	Connector, seat	–	X25: CAN1_L = 8 CAN1_H = 7 CAN2_L = 6 CAN2_H = 5	Connector, seat
X34	Connector, armrest	–	X34: CAN1_L = 8 CAN1_H = 7 CAN2_L = 6 CAN2_H = 4	Connector, armrest
X36	Connector, CAN-valve harness	–	X36: CAN2_L = 4 CAN2_H = 2	Connector, CAN-valve harness
X43	Connector, cab – TwinTrac	–	X43: CAN1_L = 13 CAN1_H = 14 CAN5_L = 8 CAN5_H = 9	Connector, cab – TwinTrac
X52	Connector, TwinTrac control devices	–	X52: CAN1_L = 5 CAN1_H = 4 CAN5_L = 8 CAN5_H = 7	Connector, TwinTrac control devices
X53	Connector, autosteering control devices		X53: CAN5_L = 4 CAN5_H = 5	Connector, autosteering control devices
X113	Connector, transmission connector 2	–	X113: CAN2_L = 2 CAN2_H = 1	Connector, transmission connector 2
X123	Connector, engine – actuators	–	X123: CAN3_L = 4 CAN3_H = 3	Connector, engine – actuators
XC1	CAN connector, options	–	XC1: CAN1_L = 3 CAN1_H = 1 CAN4_L = 4 CAN4_H = 2	CAN connector, options
XC2	CAN connector, options	–	XC2: CAN1_L = 3 CAN1_H = 1 CAN4_L = 4 CAN4_H = 2	CAN connector, options: ISOBUS
XC3	CAN connector, options	–	XC3: CAN1_L = 3 CAN1_H = 1 CAN4_L = 4 CAN4_H = 2	CAN connector, options: AutoComfort
XC4	CAN connector, options	–	XC4: CAN1_L = 3 CAN1_H = 1 CAN4_L = 4 CAN4_H = 2	CAN connector, options: Telemetry (last segment, CAN bus not connected further)
Y1C	Steering valve (additional equipment)	PVED-CL = 19	Y1C1: CAN5_L = 1 CAN5_H = 4	Auto-Guide QuickSteer TwinTrac
Y37F...Y40F	Auxiliary hydraulic valve, front AUX 1-4 (additional equipment)	AUX1F =135 AUX2F =136 AUX3F =137 AUX4F =138	Y37F...Y40F: CAN2_L = B CAN2_H = A +30 (F123 / K4): D Power GND: C	Digital valve control: spool positioning diagnostics

2.4.2 CAN1 structure, standard control units

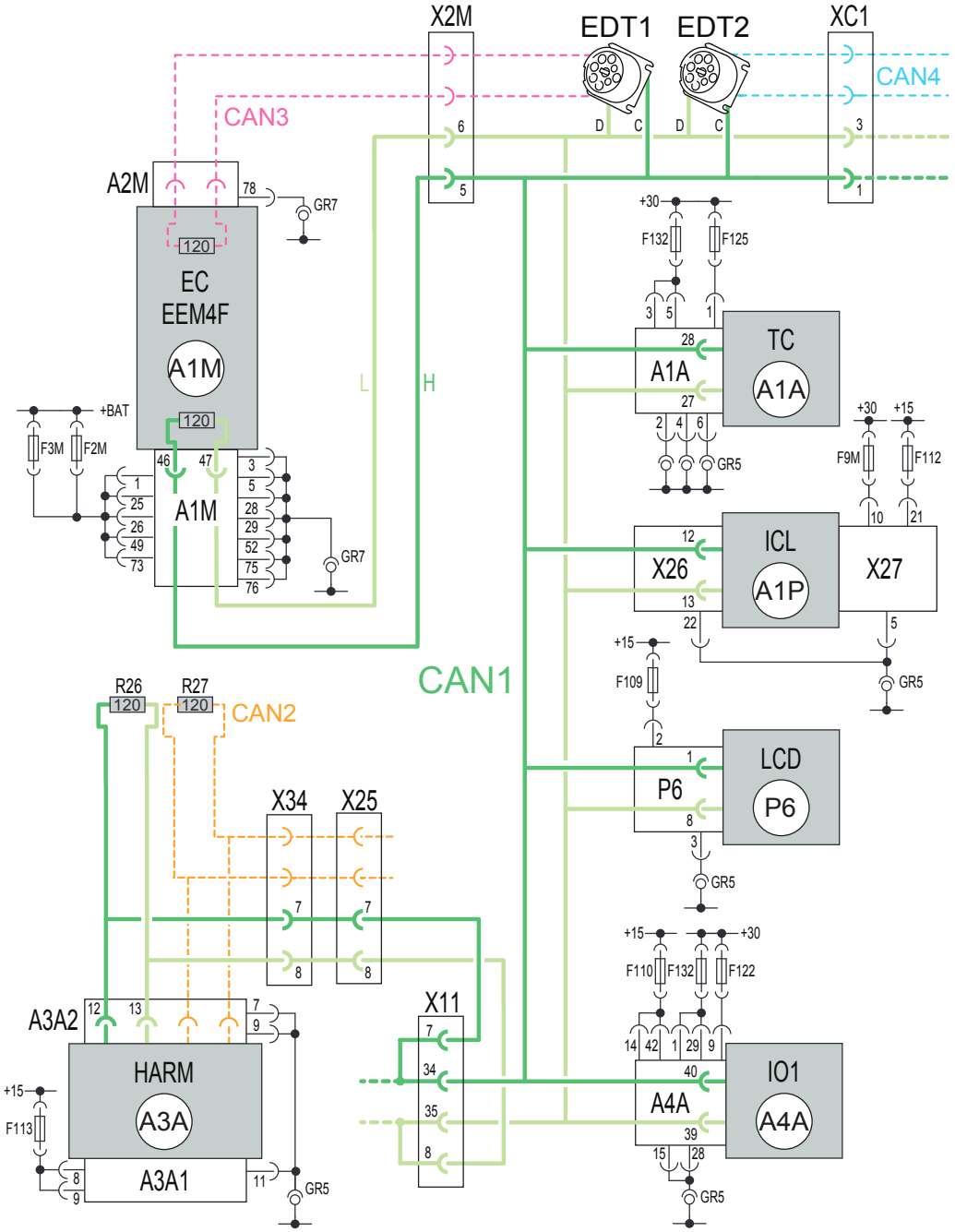

2.4.3 CAN1 structure, additional control units

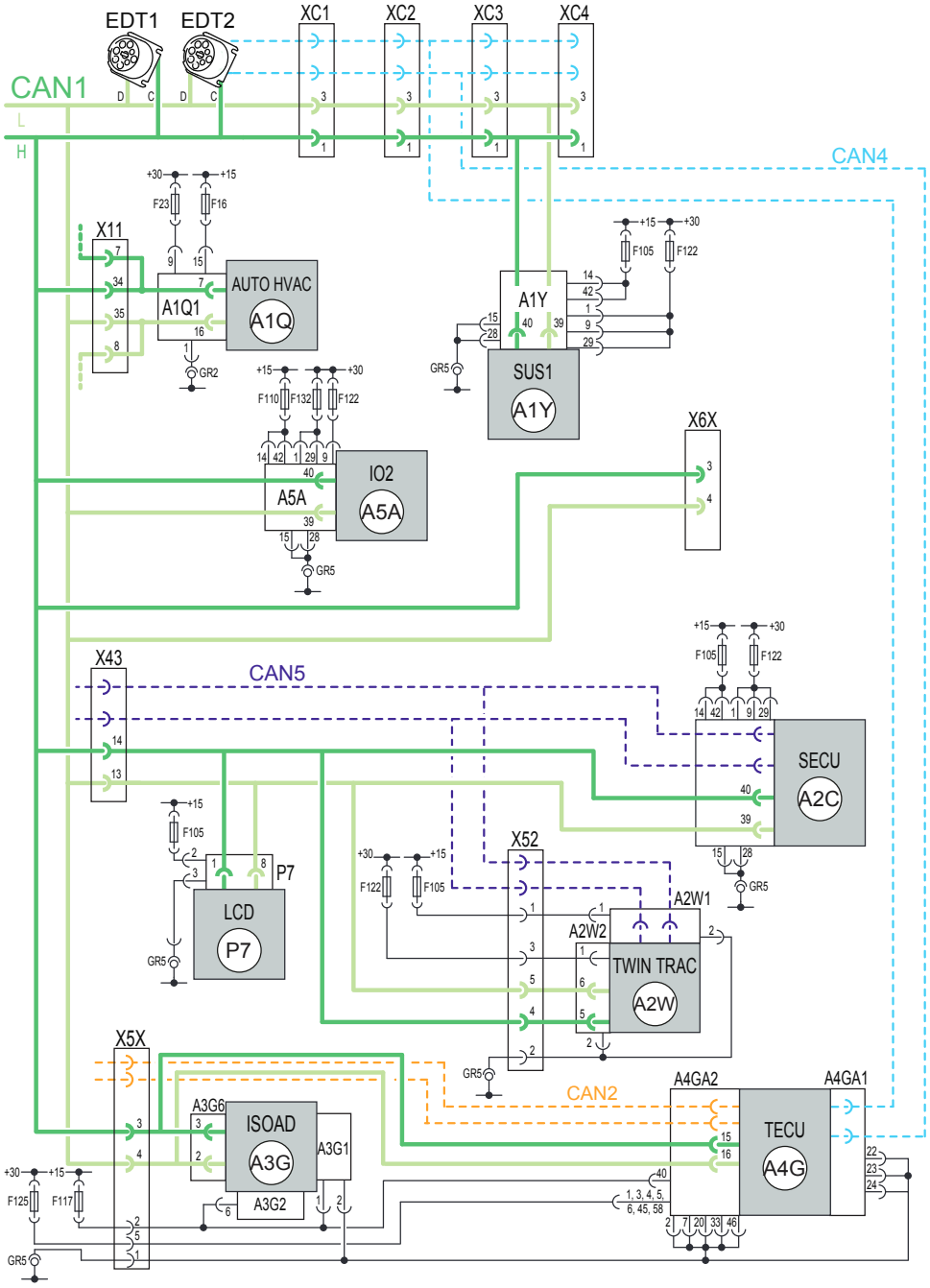

2.4.4 CAN4 structure

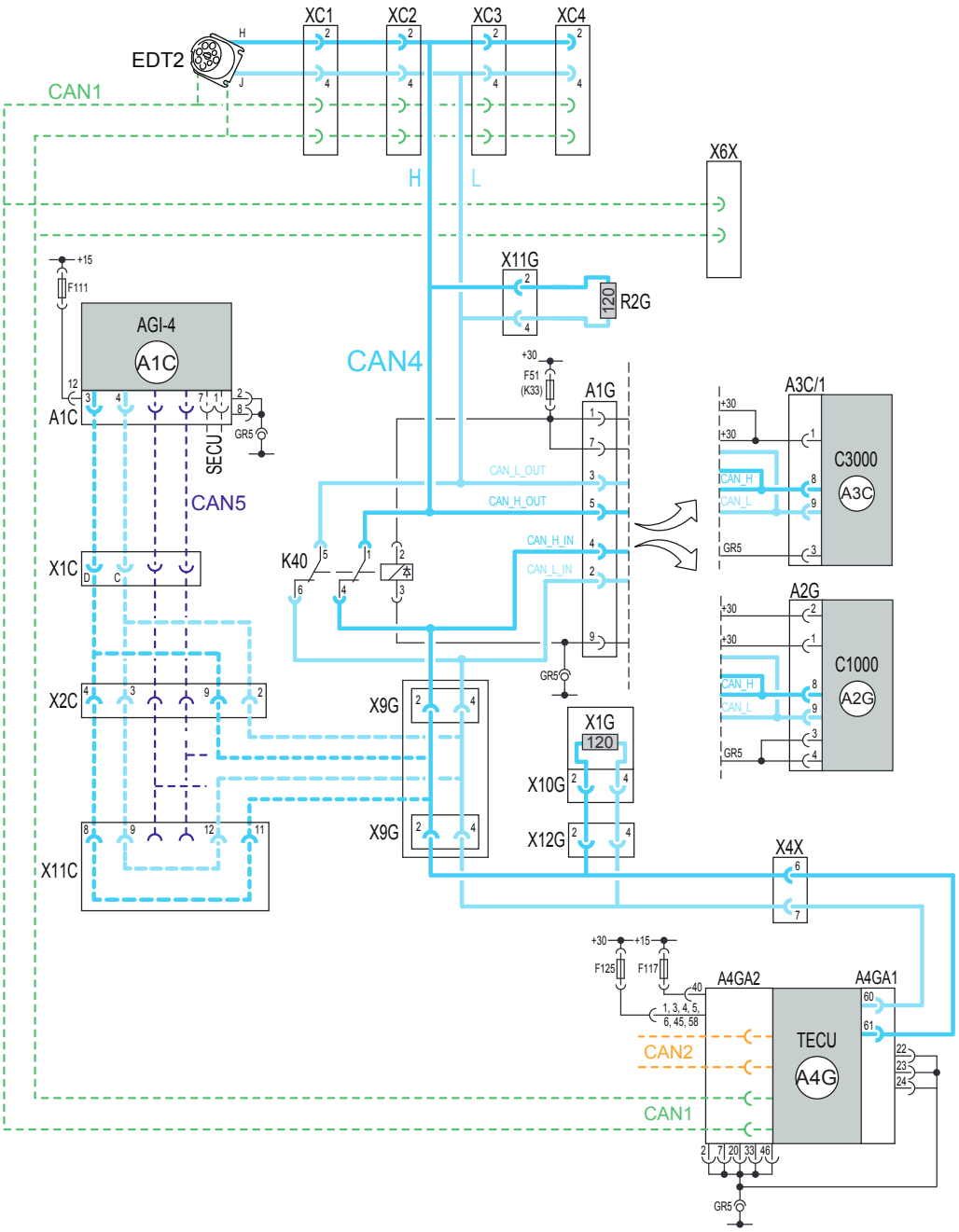

2.5 HiTech Active T4 1A7 & N4 1B7 with basic armrest

2.5.1 CAN bus structure with basic controls

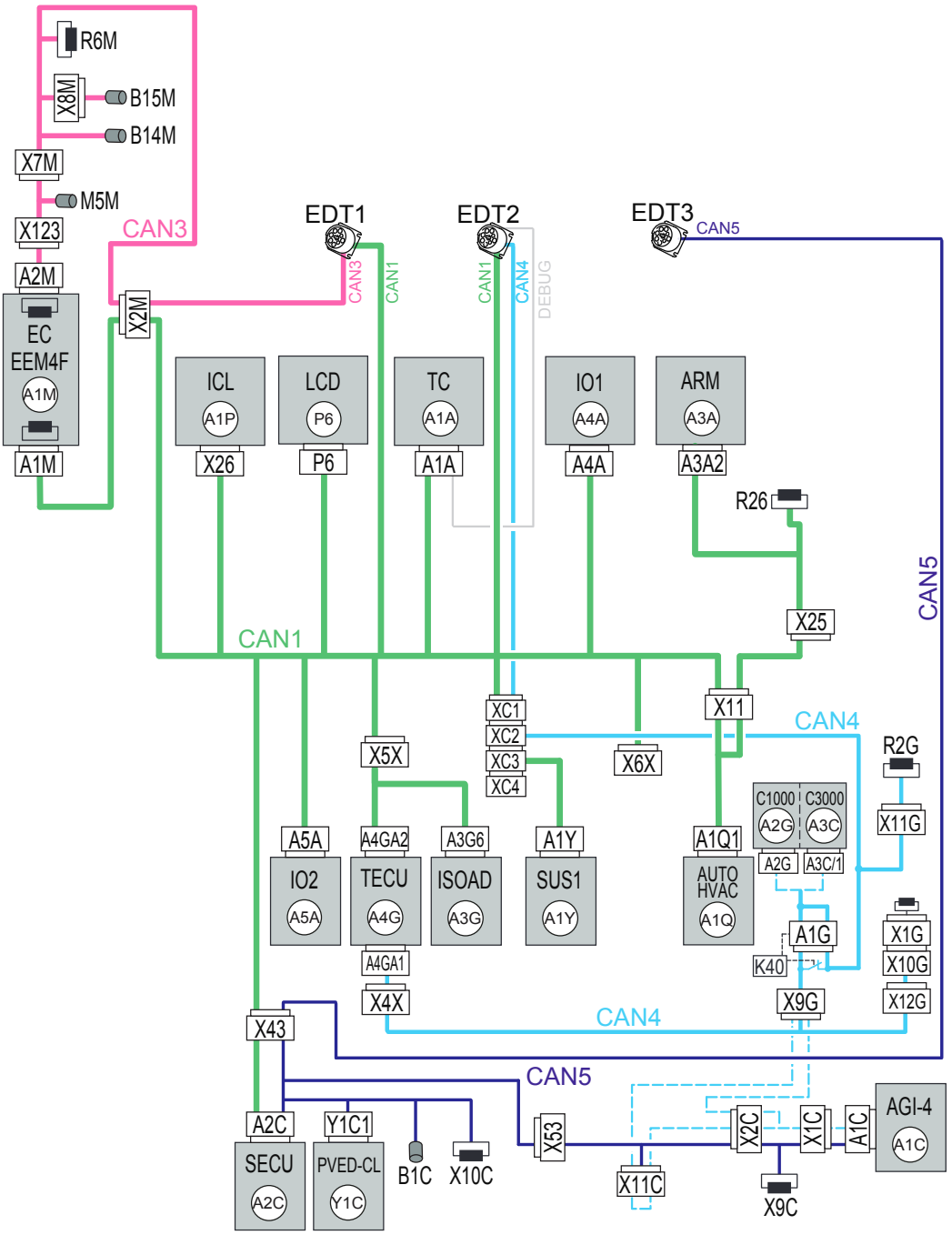

Control unit	Description	CAN ID	Connector / PIN	Functions
A1A	ECU, TC (transmission control unit)	TC = 3	A1A: CAN1_L = 27 CAN1_H = 28 DEBUG_L = 49 (factory use only) DEBUG_H = 50 (factory use only) +30 (F125): 1 +30 (F132) : 3, 5 Power GND: 2, 4, 6	transmission control power take-off Sigma power cruise control parking brake emergency brake calibration procedures Valtra Power Management fan control rear linkage control
A1C	ECU, Topdock, Auto-Guide (additional equipment)	AGI-4 = 28	A1C: CAN4_L = 4 CAN4_H = 3 CAN5_L = 6 CAN5_H = 5 +15 (F111): 12 SECU input = 1, 7 Power GND: 2, 8	Auto-Guide topdock
A1G	ISOBUS terminal interface (additional equipment)	-	A1G: CAN4_L = 2, 3 CAN4_H = 4, 5 +30 (F51 / K33) : 1, 7 Power GND: 9	ISOBUS terminal interface
A1M	ECU, EC (engine control unit)	EC = 0	A1M (tractor): CAN1_L = 47 CAN1_H = 46 +BAT (F2M / F3M): 1, 25, 26, 49, 73 Power GND: 3, 5, 28, 29, 52, 75, 76 A2M (engine): CAN3_L = 18 CAN3_H = 17 Power GND: 78	rpm torque preheater fuel injection fan emission control
A1P	Instrument panel	ICL = 23	X26: CAN1_L = 13 CAN1_H = 12 Power GND: 22 X27: +15 (F112): 21 +30 (F9M): 10 Power GND: 5	indicator lights indicator gauges information display clock vehicle hours
A1Q	Control panel, AUTO HVAC (additional equipment)	AUTO HVAC = 25	A1Q1: CAN1_L = 16 CAN1_H = 7 +15 (F16): 15 +30 (F23): 9 Power GND: 1	Automatic air conditioning
A1Y	ECU, SUS1, Autocomfort (additional equipment)	SUS1 = 47	A1Y: CAN1_L = 39 CAN1_H = 40 +15 (F105): 14, 42 +30 (F122): 1, 9, 29 Power GND: 15, 28	Cab suspension Front axle suspension
A2C	ECU, SECU, steering (additional equipment)	SECU = 50	A2C: CAN1_L = 39 CAN1_H = 40 CAN5_L = 27 CAN5_H = 13 +15 (F105): 14, 42 +30 (F122): 1, 9, 29 Power GND: 15, 28	steering control steering valve power control (PVED-CL) steering sensor power control read inputs from pedals, shuttle lever and seat direction

Table continued on next page

Control unit	Description	CAN ID	Connector / PIN	Functions
A2G	C1000 terminal (additional equipment)	–	A2G: CAN4_L = 9 CAN4_H = 8 +30 (F51 / K33) : 1, 2 Power GND: 3, 4	C1000 terminal: ISOBUS
A3A	ECU, ARM (control unit for basic controls)	ARM = 5	A3A1: +15 (F113): 8, 9 Power GND: 11 A3A2: CAN1_L = 13 CAN1_H = 12 CAN2_L = 14 (not connected) CAN2_H = 11 (not connected) Power GND: 7, 9	powershift input cruise control input
A3C	C3000 terminal (additional equipment)	–	A3C/1: CAN4_L = 9 CAN4_H = 8 +30 (F51 / K33) : 1 Power GND: 3	C3000 terminal: autosteering
A3G	ECU, ISO adapter (additional equipment)	ISOAD = 220	A3G1: +15 (F117): 1 Power GND: 2 A3G2: +15 (F117): 6 A3G6: CAN1_L = 2 CAN1_H = 3	Link between tractor and implement signal interface (ISO11786)
A4A	ECU, IO1	IO1 = 4	A4A: CAN1_L = 39 CAN1_H = 40 +15 (F110): 14, 42 +30 (F132): 1, 29 +30 (F122): 9 Power GND: 15, 28	IO functions: side panel inputs parking brake ensure
A4G	ECU, ISOBUS, TECU (additional equipment)	TECU = 221	A4GA1: CAN4_L = 60 CAN4_H = 61 Power GND: 22, 23, 24 A4GA2: CAN1_L = 16 CAN1_H = 15 +15 (F117): 40 +30 (F125): 1, 3, 4, 5, 6, 45, 58 Power GND: 2, 7, 20, 33, 46	Link between tractor and implement bus (ISO11783)
A5A	ECU, IO2 (additional equipment)	IO2 = 49	A5A: CAN1_L = 39 CAN1_H = 40 +15 (F110): 14, 42 +30 (F132): 1, 29 +30 (F122): 9 Power GND: 15, 28	IO functions: front PTO output
B1C	Sensor, steering angle (SASA), front (additional equipment)	SASA = 769	B1C: CAN5_L = 1 CAN5_H = 4	Sensor, steering angle (SASA), front
B14M	Sensor, NOx upstream	NOx1 = 81	B14M: CAN3_L = 3 CAN3_H = 4	Sensor, NOx upstream

Table continued on next page

Control unit	Description	CAN ID	Connector / PIN	Functions
B15M	Sensor, NOx downstream	NOx2 = 82	B15M: CAN3_L = 3 CAN3_H = 4	Sensor, NOx downstream
M5M	Actuator, waste gate	WASTE GATE = 83	M5M: CAN3_L = 3 CAN3_H = 4	Actuator, waste gate
EDT1	Diagnostic connector 1	–	EDT1: CAN1_L = D CAN1_H = C CAN3_L = J CAN3_H = H	Diagnostic connector 1: CAN1 (tractor) CAN3 (engine)
EDT2	Diagnostic connector 2	–	EDT2: CAN1_L = D CAN1_H = C CAN4_L = J CAN4_H = H DEBUG_L = F (factory use only) DEBUG_H = E (factory use only)	Diagnostic connector 2: CAN1 (tractor) CAN4 (implement) DEBUG (factory use only)
EDT3	Diagnostic connector 3	–	EDT3: CAN5_L = D CAN5_H = C	Diagnostic connector 3: CAN5 (autosteering)
K40	ISOBUS CAN split relay	–	K40: CAN4_L = 5, 6 CAN4_H = 1, 4	ISOBUS CAN split relay relay contacts are open when C1000/ C3000 terminal is connected
P6	A-pillar display	LCD = 59	P6: CAN1_L = 8 CAN1_H = 1 +15 (F109): 2 Power GND: 3	TC status display DEF level display user settings
X1C	Connector, top dock interface	–	X1C: CAN4_L = C CAN4_H = D CAN5_L = E CAN5_H = F	Connector, top dock interface
X2C	Connector, autosteering harness cab – roof	–	X2C: CAN4_L = 2, 3 CAN4_H = 4, 9 CAN5_L = 5 CAN5_H = 6	Connector, autosteering harness cab – roof
X2M	Connector, engine – cab	–	X2M: CAN1_L = 6 CAN1_H = 5 CAN3_L = 31 CAN3_H = 30	Connector, engine – cab
X4X	Connector, ISO-adapter and ISOBUS interface	–	X4X: CAN4_L = 7 CAN4_H = 6	Connector, ISO-adapter and ISOBUS interface
X5X	Connector, ISO-adapter	–	X5X: CAN1_L = 4 CAN1_H = 3 CAN2_L = 7 CAN2_H = 6	Connector, ISO-adapter
X6X	Connector, telemetry	–	X6X: CAN1_L = 4 CAN1_H = 3	Connector, telemetry

Table continued on next page

Control unit	Description	CAN ID	Connector / PIN	Functions
X7M	Connector, cross-wiring tractor - engine	–	X7M: CAN3_L = 6 CAN3_H = 5	Connector, cross-wiring tractor - engine
X8M	Connector, exhaust pipe	–	X8M: CAN3_L = 3 CAN3_H = 4	Connector, exhaust pipe
X9G	Connector, autosteering bus extension	–	X9G: CAN4_L = 4 CAN4_H = 2	Connector, autosteering bus extension
X1G	Connector, ISOBUS ISO BOX (ISO11783), rear	–	X10G: CAN4_L = 4 CAN4_H = 2	Connector, ISOBUS ISO BOX (ISO11783), rear
X11	Connector, cab – inner roof	–	X11: CAN1_L = 8, 35 CAN1_H = 7, 34	Connector, cab – inner roof
X11C	Connector, autosteering interface for 3rd party GPS systems	–	X11C: CAN4_L = 9, 12 CAN4_H = 8, 11 CAN5_L = 7 CAN5_H = 6	Connector, autosteering interface for 3rd party GPS systems
X11G	Connector, ISOBUS ISO BOX (ISO11783), CAN, front	–	X11G: CAN4_L = 4 CAN4_H = 2	Connector, ISOBUS ISO BOX (ISO11783), CAN, front
X12G	Connector, ISOBUS CAN out, rear	–	X12G: CAN4_L = 4 CAN4_H = 2	Connector, ISOBUS CAN out, rear
X25	Connector, seat	–	X25: CAN1_L = 8 CAN1_H = 7 CAN2_L = 6 CAN2_H = 5	Connector, seat
X34	Connector, armrest	–	X34: CAN1_L = 8 CAN1_H = 7 CAN2_L = 6 CAN2_H = 4	Connector, armrest
X43	Connector, cab – TwinTrac	–	X43: CAN1_L = 13 CAN1_H = 14 CAN5_L = 8 CAN5_H = 9	Connector, cab – TwinTrac
X53	Connector, autosteering control devices		X53: CAN5_L = 4 CAN5_H = 5	Connector, autosteering control devices
X123	Connector, engine – actuators	–	X123: CAN3_L = 4 CAN3_H = 3	Connector, engine – actuators
XC1	CAN connector, options	–	XC1: CAN1_L = 3 CAN1_H = 1 CAN4_L = 4 CAN4_H = 2	CAN connector, options
XC2	CAN connector, options	–	XC2: CAN1_L = 3 CAN1_H = 1 CAN4_L = 4 CAN4_H = 2	CAN connector, options: ISOBUS

Table continued on next page

Control unit	Description	CAN ID	Connector / PIN	Functions
XC3	CAN connector, options	–	XC3: CAN1_L = 3 CAN1_H = 1 CAN4_L = 4 CAN4_H = 2	CAN connector, options: AutoComfort
XC4	CAN connector, options	–	XC4: CAN1_L = 3 CAN1_H = 1 CAN4_L = 4 CAN4_H = 2	CAN connector, options: Telemetry (last segment, CAN bus not connected further)
Y1C	Steering valve (additional equipment)	PVED-CL = 19	Y1C1: CAN5_L = 1 CAN5_H = 4	Auto-Guide QuickSteer

2.5.2 CAN1 structure, standard control units

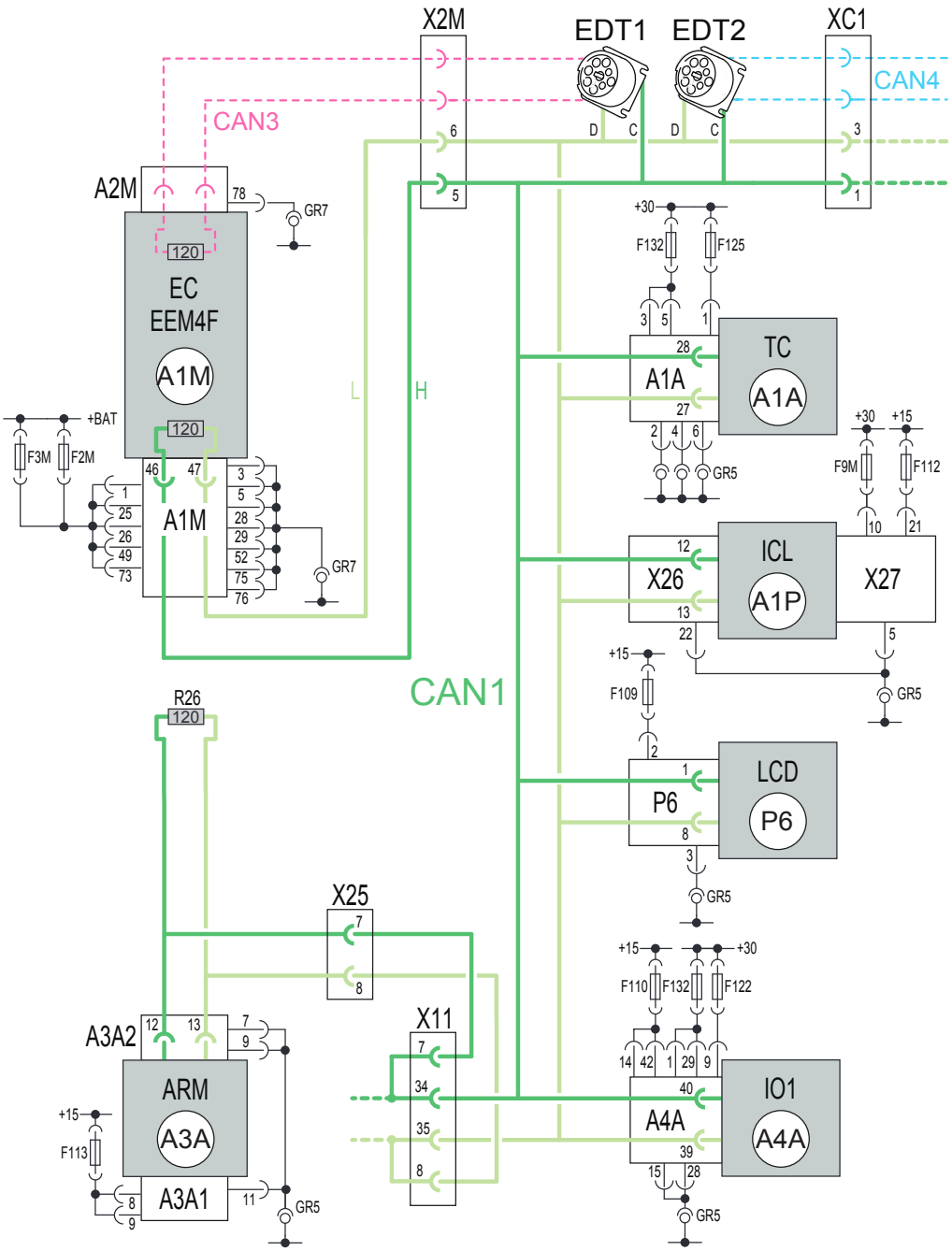

2.5.3 CAN1 structure, additional control units

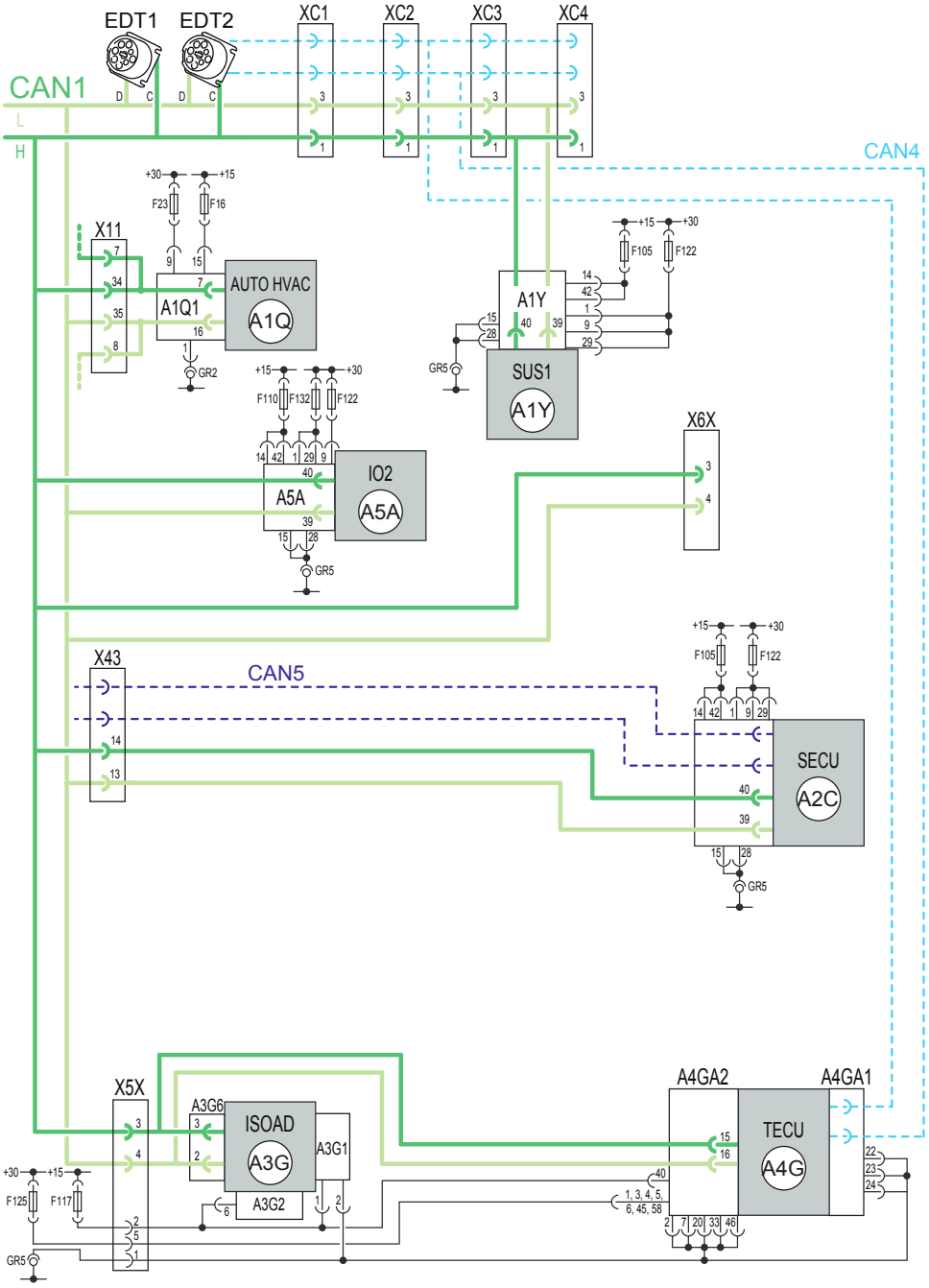

2.5.4 CAN4 structure

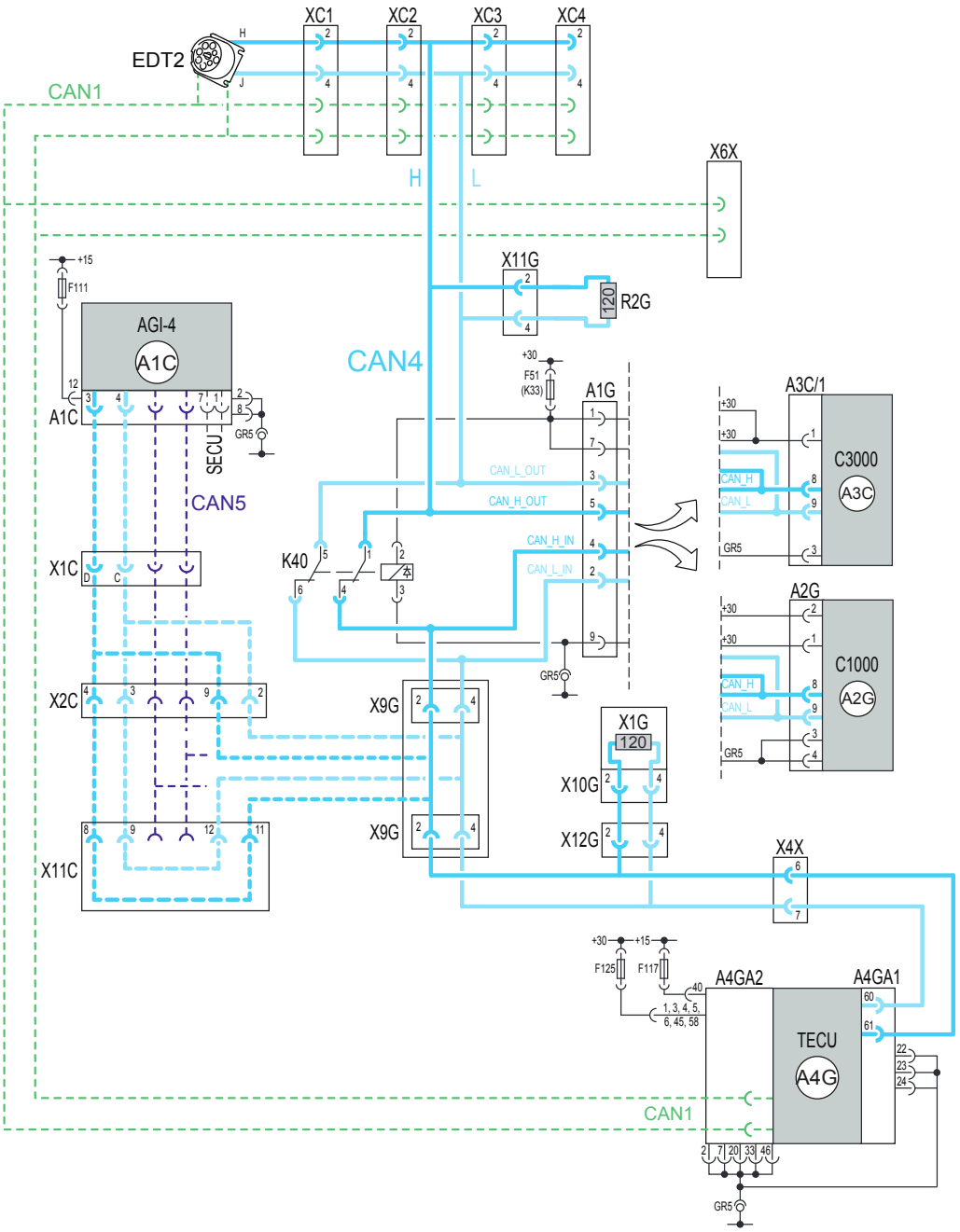

2.6 HiTech Active T4 1B8 & N4 1C8

2.6.1 Automation configuration

Model	Automation configuration	Standard control units	CAN ID	
T4 1B8 N4 1C8 Active Hitech (with armrest)	AC 37.6 AC 36.6	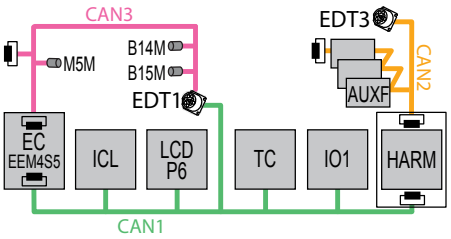	EC = 0 ICL = 23 LCD = 59 TC = 3 IO1 = 4 HARM = 5	AUX1F =135 AUX2F =136 AUX3F =137 AUX4F =138
T4 1B8 N4 1C8 Active Hitech (with basic controls)	AC 37.61 AC 36.61	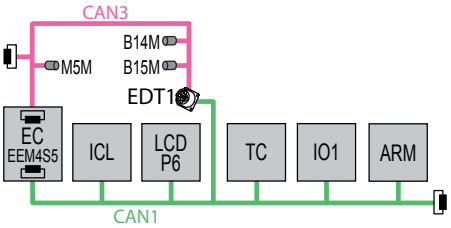	EC = 0 ICL = 23 LCD = 59 TC = 3 IO1 = 4 ARM = 5	

Abbreviation	Description
EC	ECU, EC (engine control unit)
ICL	Instrument panel
LCD	A-pillar display (P6)
TC	ECU, TC (transmission control unit)
IO1	ECU, IO1
ARM	ECU, ARM (basic controls)
HARM	ECU, HARM (hydraulic armrest control unit)
AUX	Auxiliary hydraulic valve
EDT1	Diagnostic connector 1
EDT3	Diagnostic connector 3
B14M, B15M	NOx sensors
M5M	Actuator, waste gate

Additional equipment	Description	CAN ID
AUTO HVAC	Control panel, AUTO HVAC	AUTO HVAC = 25
EDT2	Diagnostic connector 2	—
IO2	ECU, IO2	IO2 = 49
ISOAD	ECU, ISO adapter (implement signal connection ISO11786)	ISOAD = 220
LCD	C-pillar display (P7)	LCD = 60
VD03	Auto-Guide navigation controller	–
PVED-CL	Steering valve	PVED-CL = 19
SASA	Sensor, steering angle (SASA), front	SASA = 769

Table continued on next page

Additional equipment	Description	CAN ID
SECU	ECU, SECU, steering	SECU = 50
SUS1	ECU, SUS1, AutoComfort	SUS1 = 47
TECU	ECU, ISOBUS, TECU (ISO11783)	TECU = 221
TWINTRAC	Steering unit, rear (with armrest)	TWINTRAC = 772
ACM	Agco Connectivity Module (telemetry)	AGCOMMAND = 74
A9	Valtra Connect (telemetry)	–

2.6.2 CAN bus structure with armrest

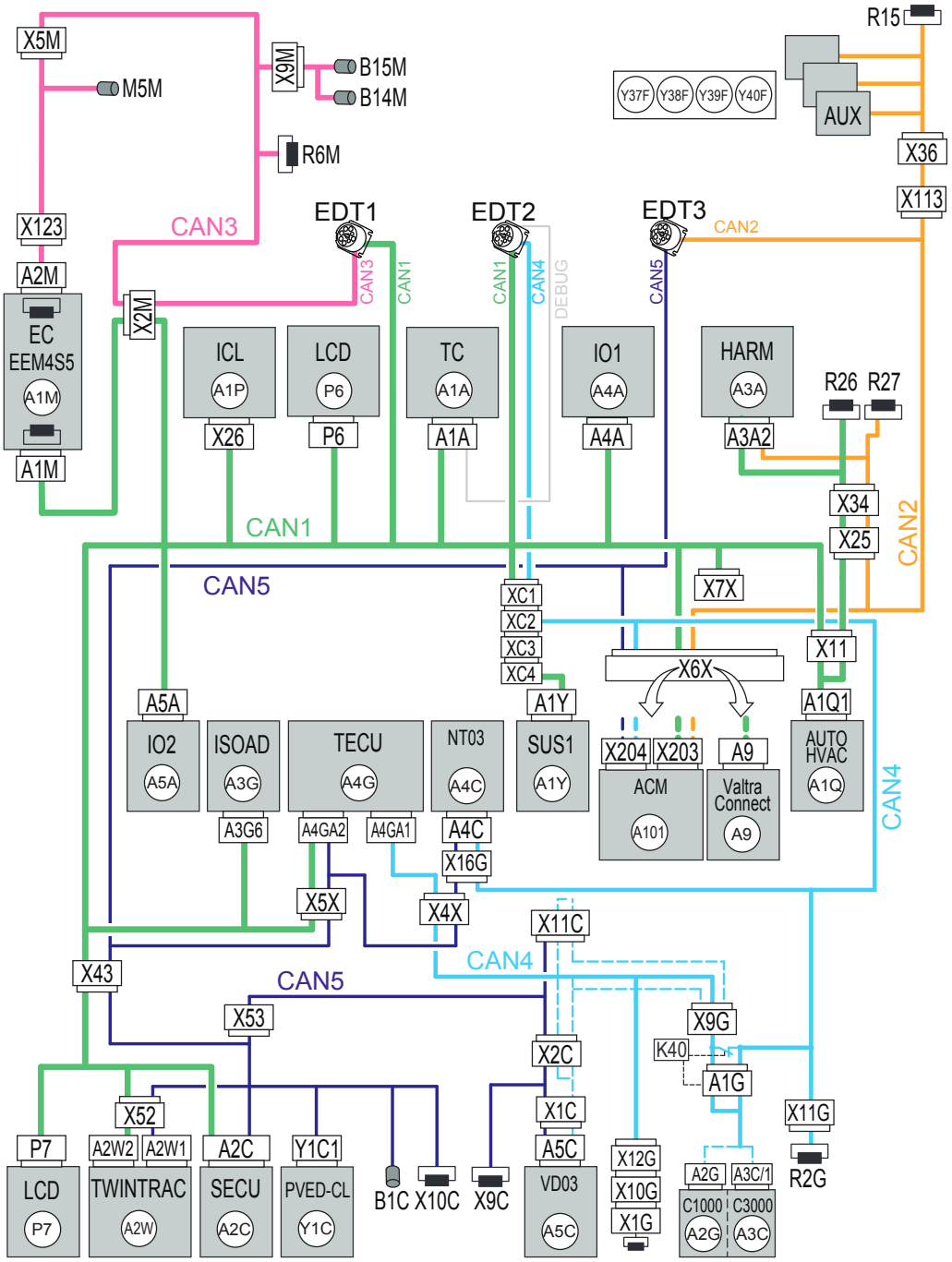

Control unit	Description	CAN ID	Connector / PIN	Functions
A1A	ECU, TC (transmission control unit)	TC = 3	A1A: CAN1_L = 27 CAN1_H = 28 DEBUG_L = 49 (factory use only) DEBUG_H = 50 (factory use only) +30 (F125): 1 +30 (F132) : 3, 5 Power GND: 2, 4, 6	transmission control power take-off Sigma power cruise control hydraulic assistant parking brake emergency brake calibration procedures Valtra Power Management fan control rear linkage control
A1G	ISOBUS terminal interface (additional equipment)	-	A1G: CAN4_L = 2, 3 CAN4_H = 4, 5 +30 (F51 / K33) : 1, 7 Power GND: 9	ISOBUS terminal interface
A1M	ECU, EC (engine control unit)	EC = 0	A1M (tractor): CAN1_L = 47 CAN1_H = 46 +BAT (F2M / F3M): 1, 25, 26, 49, 73 Power GND: 3, 5, 28, 29, 52, 75, 76 A2M (engine): CAN3_L = 18 CAN3_H = 17 Power GND: 78	rpm torque preheater fuel injection fan emission control
A1P	Instrument panel	ICL = 23	X26: CAN1_L = 13 CAN1_H = 12 Power GND: 22 X27: +15 (F112): 21 +30 (F9M): 10 Power GND: 5	indicator lights indicator gauges information display clock vehicle hours
A1Q	Control panel, AUTO HVAC (additional equipment)	AUTO HVAC = 25	A1Q1: CAN1_L = 16 CAN1_H = 7 +15 (F16): 15 +30 (F23): 9 Power GND: 1	Automatic air conditioning
A1Y	ECU, SUS1, Autocomfort (additional equipment)	SUS1 = 47	A1Y: CAN1_L = 39 CAN1_H = 40 +15 (F105): 14, 42 +30 (F122): 1, 9, 29 Power GND: 15, 28	Cab suspension Front axle suspension
A2C	ECU, SECU, steering (additional equipment)	SECU = 50	A2C: CAN1_L = 39 CAN1_H = 40 CAN5_L = 27 CAN5_H = 13 +15 (F105): 14, 42 +30 (F122): 1, 9, 29 Power GND: 15, 28	steering control reverse drive system control steering valve power control (PVED-CL) steering sensor power control read inputs from pedals, shuttle lever and seat direction
A2G	C1000 terminal (additional equipment)	–	A2G: CAN4_L = 9 CAN4_H = 8 +30 (F51 / K33) : 1, 2 Power GND: 3, 4	C1000 terminal: ISOBUS

Table continued on next page

Control unit	Description	CAN ID	Connector / PIN	Functions
A2W	Steering unit, rear (additional equipment)	TWIN TRAC = 772	A2W1: CAN5_L = 4 CAN5_H = 3 +15 (F105): 1 Power GND: 2 A2W2: CAN1_L = 6 CAN1_H = 5 +30 (F122): 1 Power GND: 2	Steering unit, rear
A3A	ECU, HARM (hydraulic armrest control unit	HARM = 5	A3A1: +15 (F113): 8, 9 Power GND: 11 A3A2: CAN1_L = 13 CAN1_H = 12 CAN2_L = 14 CAN2_H = 11 Power GND: 7, 9	powershift input cruise control input hydraulics commands
A3C	C3000 terminal (additional equipment)	—	A3C/1: CAN4_L = 9 CAN4_H = 8 +30 (K51 / K33): 1 Power GND: 3	C3000 terminal: autosteering
A3G	ECU, ISO adapter (additional equipment)	ISOAD = 220	A3G1: +15 (F117): 1 Power GND: 2 A3G2: +15 (F117): 6 A3G6: CAN1_L = 2 CAN1_H = 3	Link between tractor and implement signal interface (ISO11786)
A4A	ECU, IO1	IO1 = 4	A4A: CAN1_L = 39 CAN1_H = 40 +15 (F110): 14, 42 +30 (F132): 1, 29 +30 (F122): 9 Power GND: 15, 28	IO functions: valve power side panel inputs parking brake ensure
A4G	ECU, ISOBUS, TECU (additional equipment)	TECU = 221	A4GA1: CAN4_L = 60 CAN4_H = 61 Power GND: 22, 23, 24 A4GA2: CAN1_L = 16 CAN1_H = 15 CAN2_L = 54 CAN2_H = 53 +15 (F117): 40 +30 (F125): 1, 3, 4, 5, 6, 45, 58 Power GND: 2, 7, 20, 33, 46	Link between tractor and implement bus (ISO11783) Interface between Auto-Guide and PVED-CL Interface for additional SmartTouch display
A5A	ECU, IO2 (additional equipment)	IO2 = 49	A5A: CAN1_L = 39 CAN1_H = 40 +15 (F110): 14, 42 +30 (F132): 1, 29 +30 (F122): 9 Power GND: 15, 28	IO functions: front PTO output front loader functions

Table continued on next page

Control unit	Description	CAN ID	Connector / PIN	Functions
A5C	Auto-Guide navigation controller	–	A5C: CAN4_L = 22 CAN4_H = 23 KBUS_L = 20 KBUS_H = 21 +15 (F111): 10 +30 (F125) : 8 Power GND: 9	Auto-Guide navigation controller
A9	ECU, Valtra Connect (additional equipment)	—	A9: CAN1_L = 7 CAN1_H = 6 +15 (F117): 3 Power GND: 1	Telemetry
A101	AGCO Connectivity Module (ACM) (additional equipment)	AGCOMMAND = 74	X203: CAN1_L = 7 CAN1_H = 6 CAN2_L = 8 CAN2_H = 5 +15 (F117): 12 Power GND: 2 X204: CAN4_L = 7 CAN4_H = 6 KBUS_L = 8 KBUS_H = 5	Telemetry
B1C	Sensor, steering angle (SASA), front (additional equipment)	SASA = 769	B1C: CAN5_L = 1 CAN5_H = 4	Sensor, steering angle (SASA), front
B14M	Sensor, NOx upstream	NOx1 = 81	B14M: CAN3_L = 3 CAN3_H = 4	Sensor, NOx upstream
B15M	Sensor, NOx downstream	NOx2 = 82	B15M: CAN3_L = 3 CAN3_H = 4	Sensor, NOx downstream
M5M	Actuator, waste gate	WASTE GATE = 83	M5M: CAN3_L = 3 CAN3_H = 4	Actuator, waste gate
EDT1	Diagnostic connector 1	–	EDT1: CAN1_L = D CAN1_H = C CAN3_L = J CAN3_H = H	Diagnostic connector 1: CAN1 (tractor) CAN3 (engine)
EDT2	Diagnostic connector 2	–	EDT2: CAN1_L = D CAN1_H = C CAN4_L = J CAN4_H = H DEBUG_L = F (factory use only) DEBUG_H = E (factory use only)	Diagnostic connector 2: CAN1 (tractor) CAN4 (implement) DEBUG (factory use only)
EDT3	Diagnostic connector 3	–	EDT3: CAN2_L = J CAN2_H = H CAN5_L = D CAN5_H = C	Diagnostic connector 3: CAN2 (hydraulics) CAN5 (autosteering)
K40	ISOBUS CAN split relay	–	K40: CAN4_L = 5, 6 CAN4_H = 1, 4	ISOBUS CAN split relay relay contacts are open when C1000 terminal is connected

Table continued on next page

Control unit	Description	CAN ID	Connector / PIN	Functions
P6	A-pillar display	LCD = 59	P6: CAN1_L = 8 CAN1_H = 1 +15 (F109): 2 +30 (F126): 5 Power GND: 3	TC status display DEF level display user settings
P7	C-pillar display (additional equipment)	LCD = 60	P7: CAN1_L = 8 CAN1_H = 1 +15 (F105): 2 Power GND: 3	TC status display DEF level display user settings
R2G	Terminating resistor, CAN4	–		Terminating resistor, CAN4
R6M	Terminating resistor, CAN3	–		Terminating resistor, CAN3
R15	Terminating resistor, CAN2	–		Terminating resistor, CAN2
R26	Terminating resistor, CAN1	–		Terminating resistor, CAN1
R27	Terminating resistor, CAN2	–		Terminating resistor, CAN2
X1C	Connector, top dock interface	–	X1C: CAN4_L = C CAN4_H = D CAN5_L = E CAN5_H = F	Connector, top dock interface
X1G	Connector, ISOBUS ISO BOX (ISO11783), rear	–	X1G: CAN4_L = 4 CAN4_H = 2	Connector, ISOBUS ISO BOX (ISO11783), rear
X2C	Connector, autosteering harness cab – roof	–	X2C: CAN4_L = 2, 3 CAN4_H = 4, 9 CAN5_L = 5 CAN5_H = 6	Connector, autosteering harness cab – roof
X2M	Connector, engine – cab	–	X2M: CAN1_L = 6 CAN1_H = 5 CAN3_L = 31 CAN3_H = 30	Connector, engine – cab
X4X	Connector, ISO-adapter and ISOBUS interface	–	X4X: CAN4_L = 7 CAN4_H = 6	Connector, ISO-adapter and ISOBUS interface
X5X	Connector, ISO-adapter	–	X5X: CAN1_L = 4 CAN1_H = 3 CAN5_L = 7 CAN5_H = 6	Connector, ISO-adapter
X6X	Connector, telemetry	–	X6X: CAN1_L = 4 CAN1_H = 3 CAN2_L = 10 CAN2_H = 11 CAN4_L = 9 CAN4_H = 8 CAN5_L = 12 CAN5_H = 13	Connector, telemetry
X9C	Terminating resistor, CAN5	–		Terminating resistor, CAN5
X9G	Connector, autosteering bus extension	–	X9G: CAN4_L = 4 CAN4_H = 2	Connector, autosteering bus extension

Table continued on next page

Control unit	Description	CAN ID	Connector / PIN	Functions
X9M	Connector, exhaust pipe	–	X9M: CAN3_L = 3 CAN3_H = 4	Connector, exhaust pipe
X10C	Terminating resistor, CAN5	–		Terminating resistor, CAN5
X10G	Connector, ISOBUS ISO BOX (ISO11783), CAN, rear	–	X10G: CAN4_L = 4 CAN4_H = 2	Connector, ISOBUS ISO BOX (ISO11783), CAN, rear
X11	Connector, cab – inner roof	–	X11: CAN1_L = 8, 35 CAN1_H = 7, 34	Connector, cab – inner roof
X11C	Connector, autosteering interface for 3rd party GPS systems	–	X11C: CAN4_L = 9, 12 CAN4_H = 8, 11 CAN5_L = 7 CAN5_H = 6	Connector, autosteering interface for 3rd party GPS systems
X11G	Connector, ISOBUS ISO BOX (ISO11783), CAN, front	–	X11G: CAN4_L = 4 CAN4_H = 2	Connector, ISOBUS ISO BOX (ISO11783), CAN, front
X12G	Connector, ISOBUS CAN out, rear	–	X12G: CAN4_L = 4 CAN4_H = 2	Connector, ISOBUS CAN out, rear
X25	Connector, seat	–	X25: CAN1_L = 8 CAN1_H = 7 CAN2_L = 6 CAN2_H = 5	Connector, seat
X34	Connector, armrest	–	X34: CAN1_L = 8 CAN1_H = 7 CAN2_L = 6 CAN2_H = 4	Connector, armrest
X36	Connector, CAN-valve harness	–	X36: CAN2_L = 4 CAN2_H = 2	Connector, CAN-valve harness
X43	Connector, cab – TwinTrac	–	X43: CAN1_L = 13 CAN1_H = 14 CAN5_L = 8 CAN5_H = 9	Connector, cab – TwinTrac
X52	Connector, TwinTrac control devices	–	X52: CAN1_L = 5 CAN1_H = 4 CAN5_L = 8 CAN5_H = 7	Connector, TwinTrac control devices
X53	Connector, autosteering control devices		X53: CAN5_L = 4 CAN5_H = 5	Connector, autosteering control devices
X113	Connector, transmission connector 2	–	X113: CAN2_L = 2 CAN2_H = 1	Connector, transmission connector 2
X123	Connector, engine – actuators	–	X123: CAN3_L = 4 CAN3_H = 3	Connector, engine – actuators
XC1	CAN connector, options	–	XC1: CAN1_L = 3 CAN1_H = 1 CAN4_L = 4 CAN4_H = 2	CAN connector, options

Table continued on next page

Control unit	Description	CAN ID	Connector / PIN	Functions
XC2	CAN connector, options	–	XC2: CAN1_L = 3 CAN1_H = 1 CAN4_L = 4 CAN4_H = 2	CAN connector, options: ISOBUS
XC3	CAN connector, options	–	XC3: CAN1_L = 3 CAN1_H = 1 CAN4_L = 4 CAN4_H = 2	CAN connector, options: AutoComfort
XC4	CAN connector, options	–	XC4: CAN1_L = 3 CAN1_H = 1 CAN4_L = 4 CAN4_H = 2	CAN connector, options: Telemetry (last segment, CAN bus not connected further)
Y1C	Steering valve (additional equipment)	PVED-CL = 19	Y1C1: CAN5_L = 1 CAN5_H = 4	Auto-Guide QuickSteer TwinTrac
Y37F...Y40F	Auxiliary hydraulic valve, front AUX 1-4 (additional equipment)	AUX1F =135 AUX2F =136 AUX3F =137 AUX4F =138	Y37F...Y40F: CAN2_L = B CAN2_H = A +30 (F123 / K4): D Power GND: C	Digital valve control: spool positioning diagnostics

2.6.2.1 CAN1 structure, standard control units

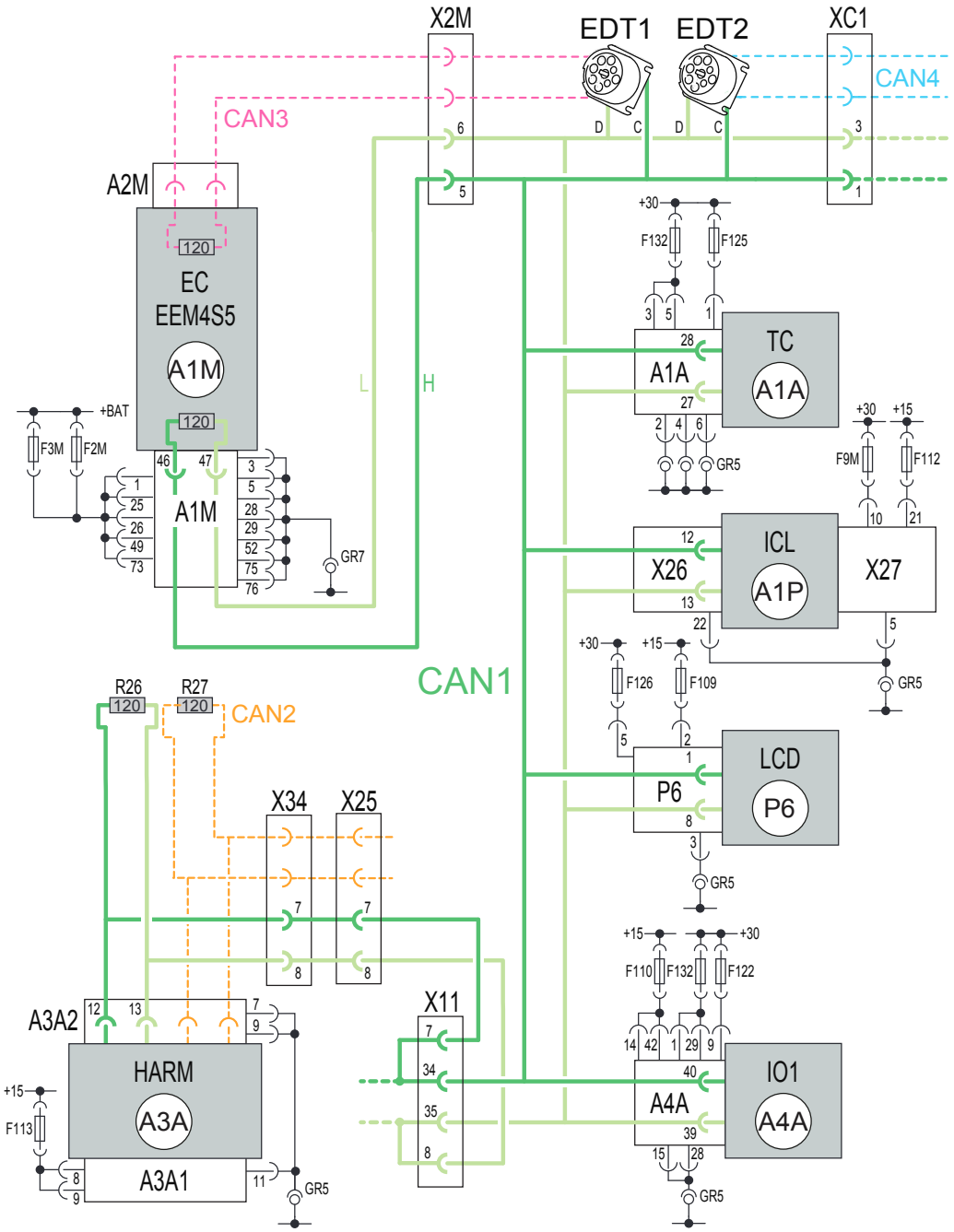

2.6.2.2 CAN1 structure, additional control units

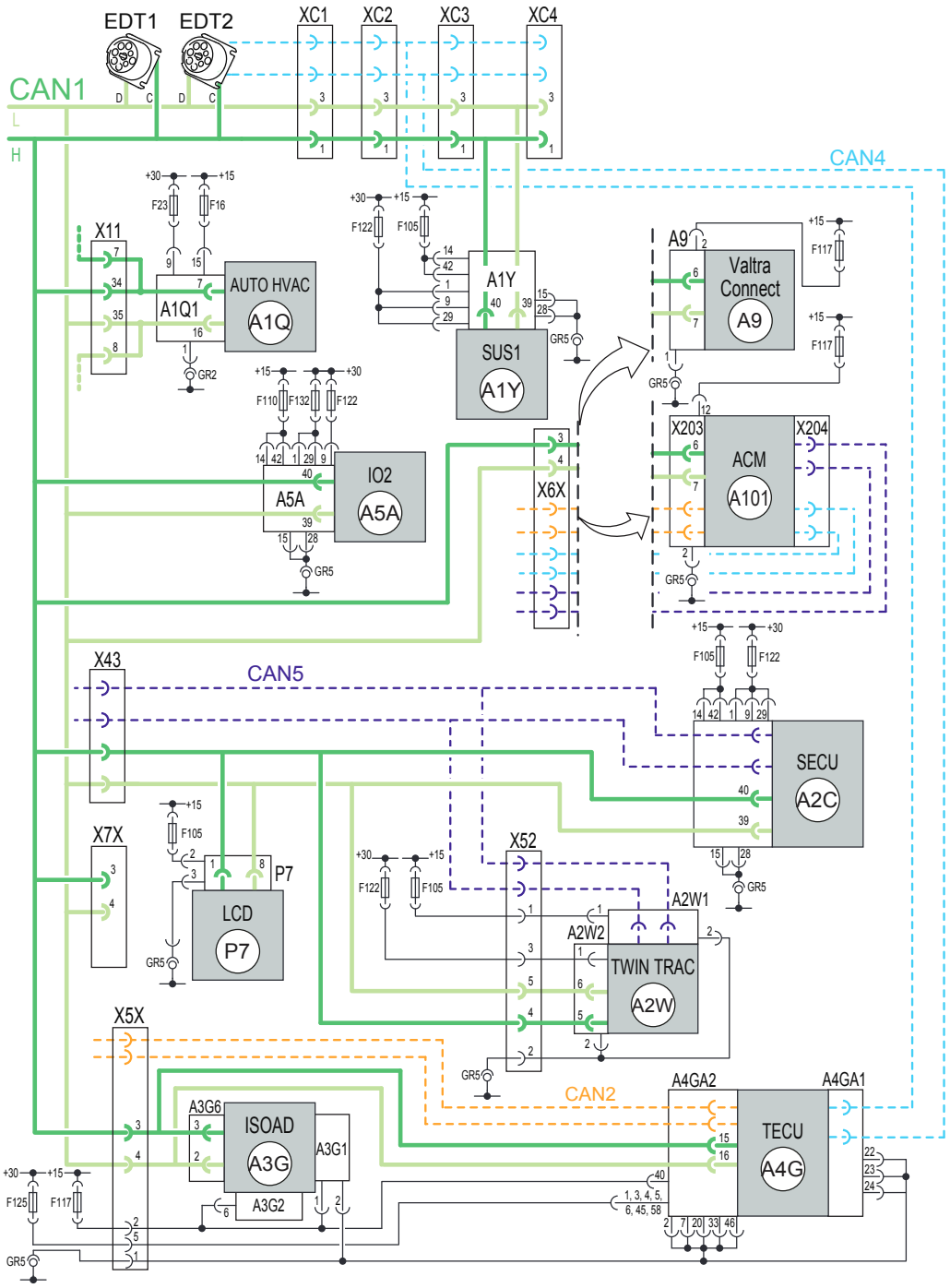

2.6.2.3 CAN2 structure

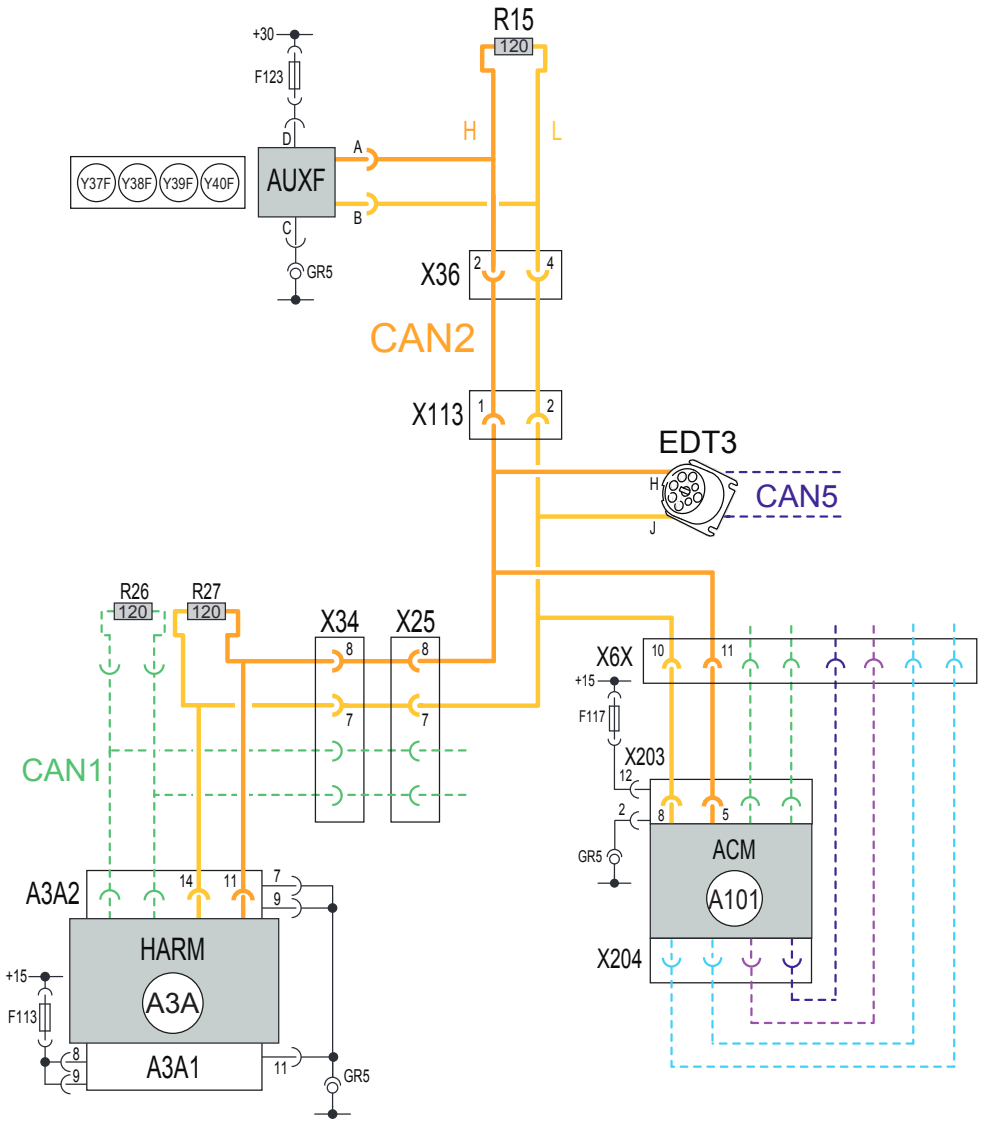

2.6.2.4 CAN3 structure

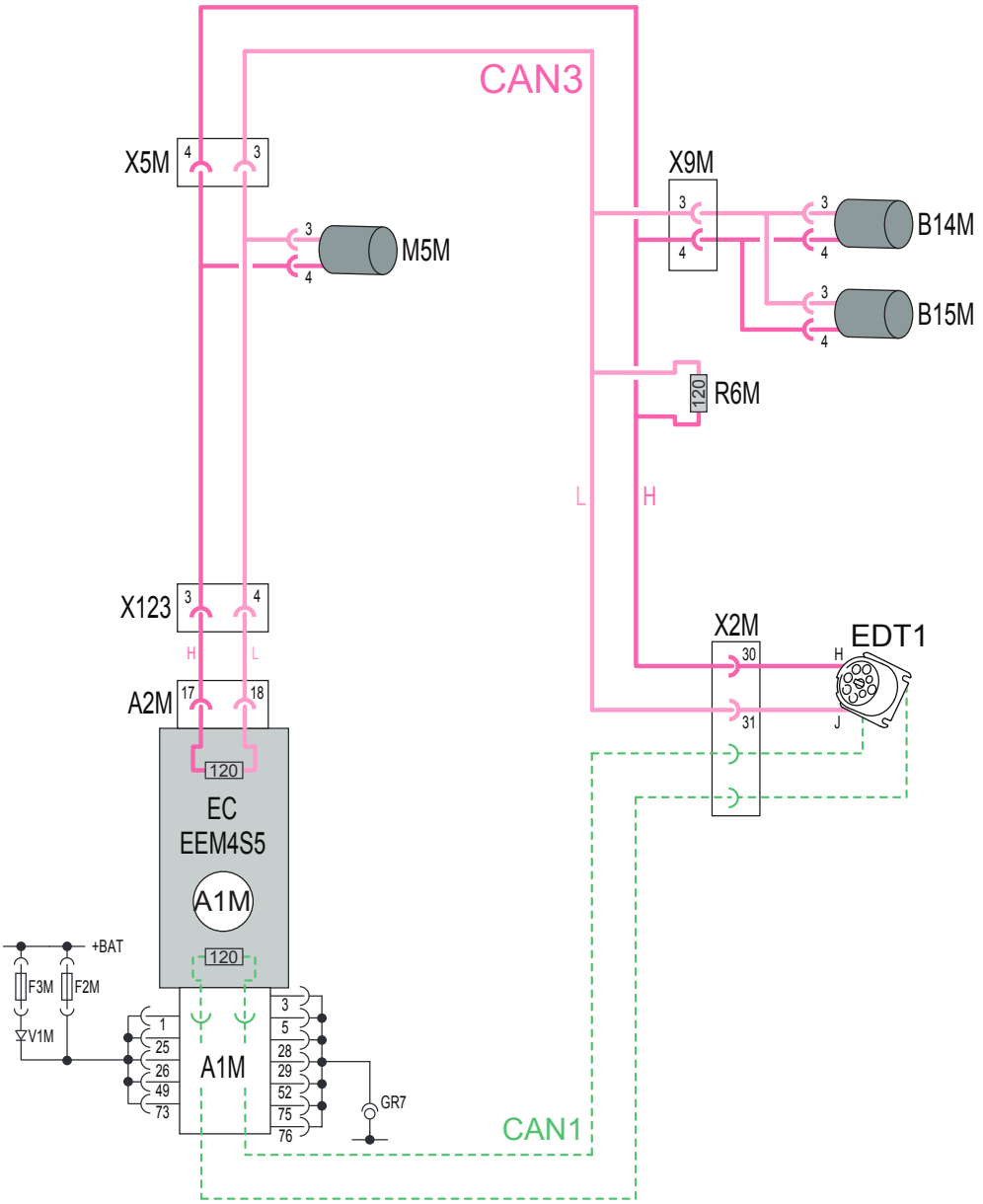

2.6.2.5 CAN4 structure

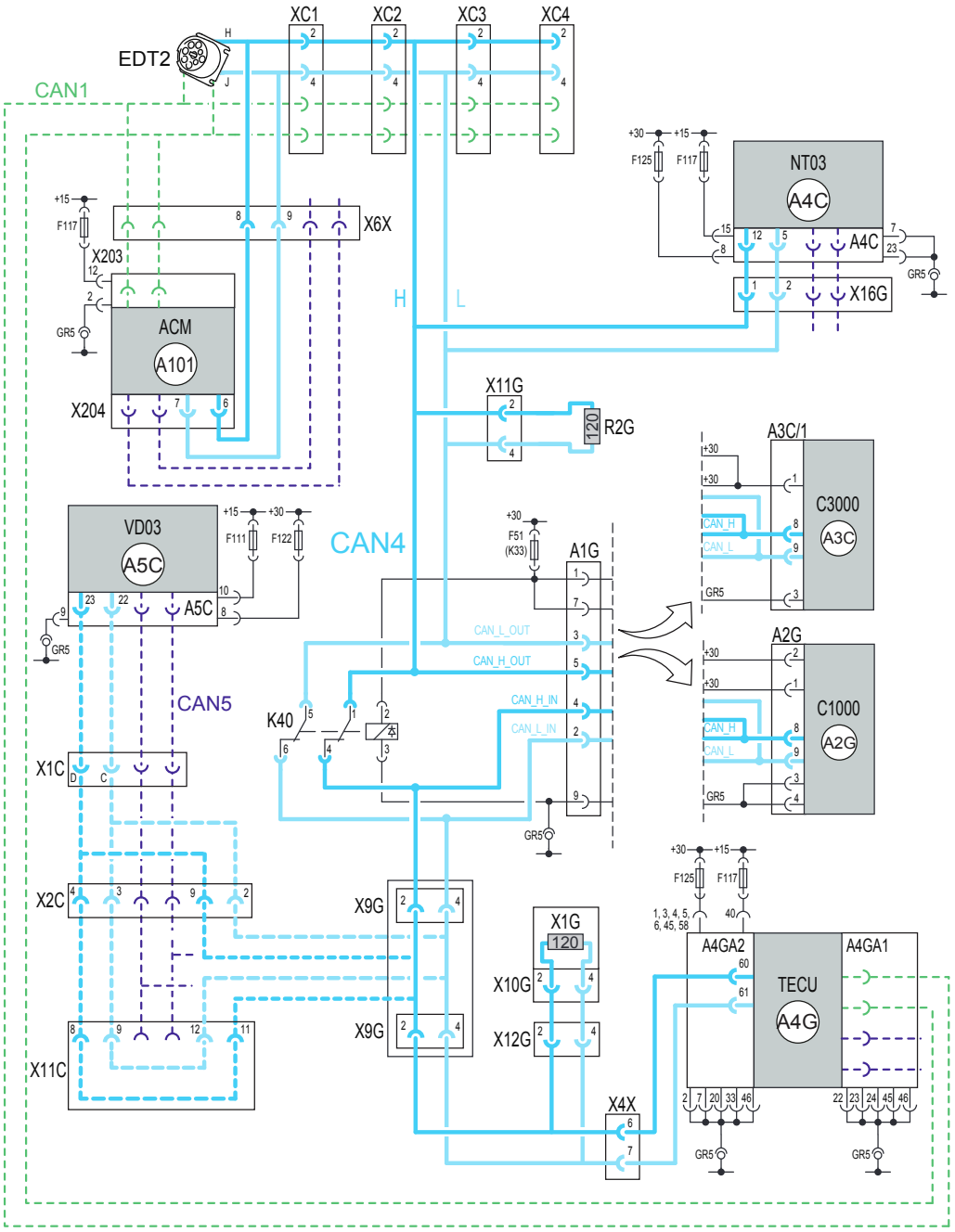

2.6.2.6 CAN5 structure

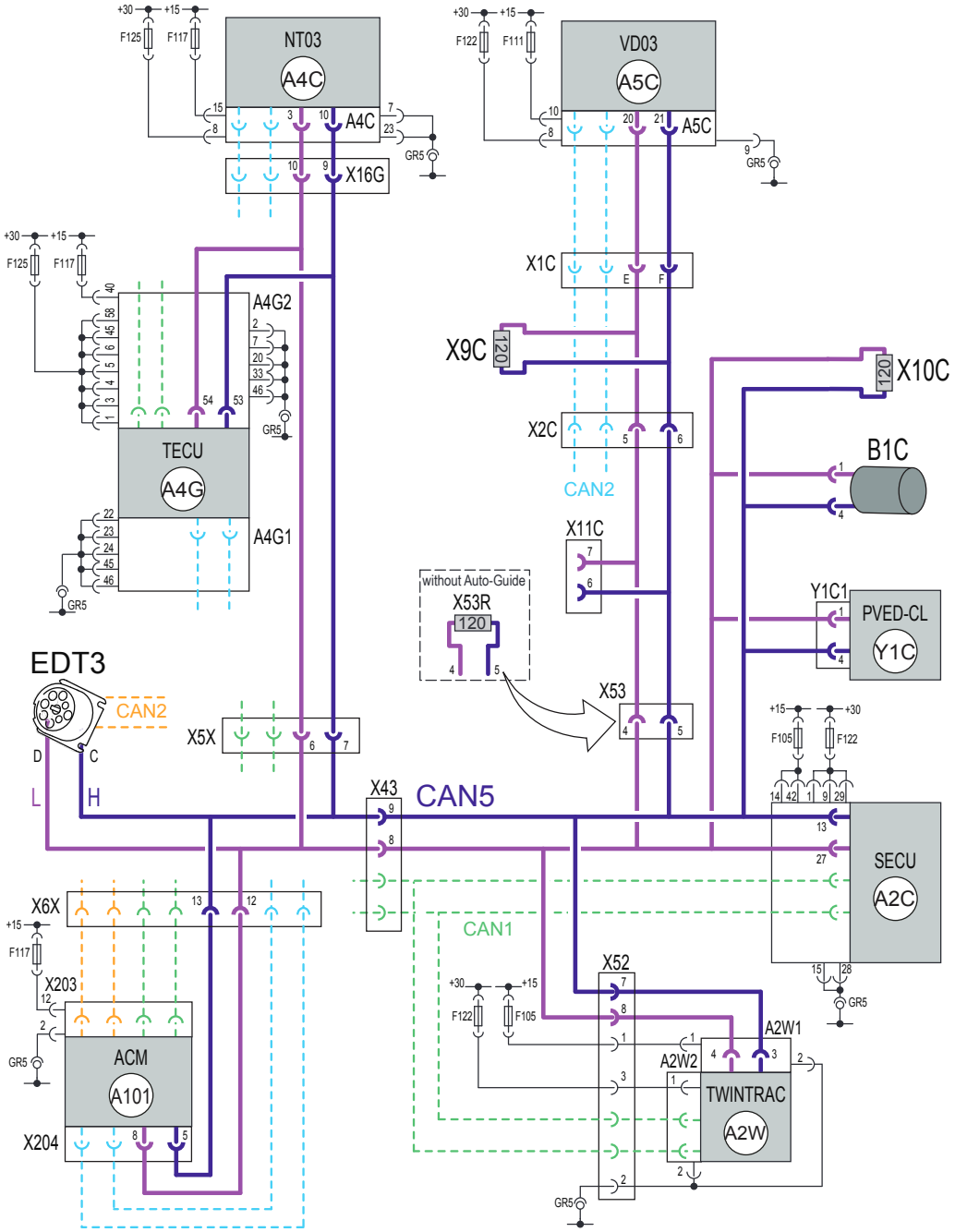

2.6.3 CAN bus structure with basic controls

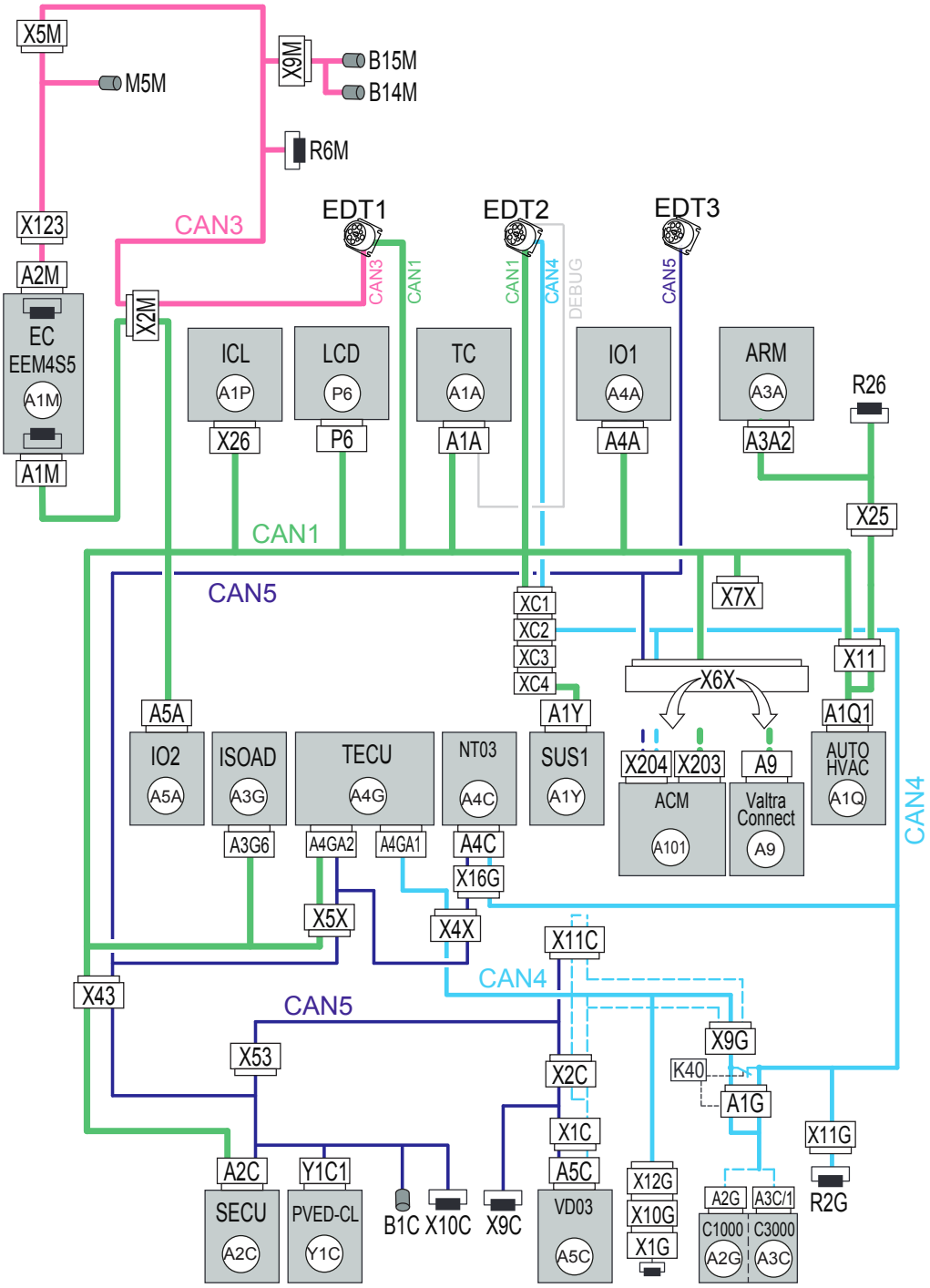

Control unit	Description	CAN ID	Connector / PIN	Functions
A1A	ECU, TC (transmission control unit)	TC = 3	A1A: CAN1_L = 27 CAN1_H = 28 DEBUG_L = 49 (factory use only) DEBUG_H = 50 (factory use only) +30 (F125): 1 +30 (F132) : 3, 5 Power GND: 2, 4, 6	transmission control power take-off Sigma power cruise control parking brake emergency brake calibration procedures Valtra Power Management fan control rear linkage control
A1G	ISOBUS terminal interface (additional equipment)	-	A1G: CAN4_L = 2, 3 CAN4_H = 4, 5 +30 (F51 / K33) : 1, 7 Power GND: 9	ISOBUS terminal interface
A1M	ECU, EC (engine control unit)	EC = 0	A1M (tractor): CAN1_L = 47 CAN1_H = 46 +BAT (F2M / F3M): 1, 25, 26, 49, 73 Power GND: 3, 5, 28, 29, 52, 75, 76 A2M (engine): CAN3_L = 18 CAN3_H = 17 Power GND: 78	rpm torque preheater fuel injection fan emission control
A1P	Instrument panel	ICL = 23	X26: CAN1_L = 13 CAN1_H = 12 Power GND: 22 X27: +15 (F112): 21 +30 (F9M): 10 Power GND: 5	indicator lights indicator gauges information display clock vehicle hours
A1Q	Control panel, AUTO HVAC (additional equipment)	AUTO HVAC = 25	A1Q1: CAN1_L = 16 CAN1_H = 7 +15 (F16): 15 +30 (F23): 9 Power GND: 1	Automatic air conditioning
A1Y	ECU, SUS1, Autocomfort (additional equipment)	SUS1 = 47	A1Y: CAN1_L = 39 CAN1_H = 40 +15 (F105): 14, 42 +30 (F122): 1, 9, 29 Power GND: 15, 28	Cab suspension Front axle suspension
A2C	ECU, SECU, steering (additional equipment)	SECU = 50	A2C: CAN1_L = 39 CAN1_H = 40 CAN5_L = 27 CAN5_H = 13 +15 (F105): 14, 42 +30 (F122): 1, 9, 29 Power GND: 15, 28	steering control steering valve power control (PVED-CL) steering sensor power control read inputs from pedals, shuttle lever and seat direction
A2G	C1000 terminal (additional equipment)	–	A2G: CAN4_L = 9 CAN4_H = 8 +30 (F51 / K33) : 1, 2 Power GND: 3, 4	C1000 terminal: ISOBUS

Table continued on next page

Control unit	Description	CAN ID	Connector / PIN	Functions
A3A	ECU, ARM (control unit for basic controls)	ARM = 5	A3A1: +15 (F113): 8, 9 Power GND: 11 A3A2: CAN1_L = 13 CAN1_H = 12 CAN2_L = 14 (not connected) CAN2_H = 11 (not connected) Power GND: 7, 9	powershift input cruise control input
A3C	C3000 terminal (additional equipment)	—	A3C/1: CAN4_L = 9 CAN4_H = 8 +30 (K51 / K33): 1 Power GND: 3	C3000 terminal: autosteering
A3G	ECU, ISO adapter (additional equipment)	ISOAD = 220	A3G1: +15 (F117): 1 Power GND: 2 A3G2: +15 (F117): 6 A3G6: CAN1_L = 2 CAN1_H = 3	Link between tractor and implement signal interface (ISO11786)
A4A	ECU, IO1	IO1 = 4	A4A: CAN1_L = 39 CAN1_H = 40 +15 (F110): 14, 42 +30 (F132): 1, 29 +30 (F122): 9 Power GND: 15, 28	IO functions: side panel inputs parking brake ensure
A4G	ECU, ISOBUS, TECU (additional equipment)	TECU = 221	A4GA1: CAN4_L = 60 CAN4_H = 61 Power GND: 22, 23, 24 A4GA2: CAN1_L = 16 CAN1_H = 15 +15 (F117): 40 +30 (F125): 1, 3, 4, 5, 6, 45, 58 Power GND: 2, 7, 20, 33, 46	Link between tractor and implement bus (ISO11783) Interface between Auto-Guide and PVED-CL Interface for additional SmartTouch display
A5A	ECU, IO2 (additional equipment)	IO2 = 49	A5A: CAN1_L = 39 CAN1_H = 40 +15 (F110): 14, 42 +30 (F132): 1, 29 +30 (F122): 9 Power GND: 15, 28	IO functions: front PTO output
A5C	Auto-Guide navigation controller	-	A5C: CAN4_L = 22 CAN4_H = 23 KBUS_L = 20 KBUS_H = 21 +15 (F111): 10 +30 (F125) : 8 Power GND: 9	Auto-Guide navigation controller
A9	ECU, Valtra Connect (additional equipment)	—	A9: CAN1_L = 7 CAN1_H = 6 +15 (F117): 3 Power GND: 1	Telemetry

Table continued on next page

Control unit	Description	CAN ID	Connector / PIN	Functions
A101	AGCO Connectivity Module (ACM) (additional equipment)	AGCOMMAND = 74	X203: CAN1_L = 7 CAN1_H = 6 +15 (F117): 12 Power GND: 2 X204: CAN4_L = 7 CAN4_H = 6 CAN5_L = 8 CAN5_H = 5	Telemetry
B1C	Sensor, steering angle (SASA), front (additional equipment)	SASA = 769	B1C: CAN5_L = 1 CAN5_H = 4	Sensor, steering angle (SASA), front
B14M	Sensor, NOx upstream	NOx1 = 81	B14M: CAN3_L = 3 CAN3_H = 4	Sensor, NOx upstream
B15M	Sensor, NOx downstream	NOx2 = 82	B15M: CAN3_L = 3 CAN3_H = 4	Sensor, NOx downstream
EDT1	Diagnostic connector 1	–	EDT1: CAN1_L = D CAN1_H = C CAN3_L = J CAN3_H = H	Diagnostic connector 1: CAN1 (tractor) CAN3 (engine)
EDT2	Diagnostic connector 2	–	EDT2: CAN1_L = D CAN1_H = C CAN4_L = J CAN4_H = H DEBUG_L = F (factory use only) DEBUG_H = E (factory use only)	Diagnostic connector 2: CAN1 (tractor) CAN4 (implement) DEBUG (factory use only)
EDT3	Diagnostic connector 3	–	EDT3: CAN5_L = D CAN5_H = C	Diagnostic connector 3: CAN5 (autosteering)
K40	ISOBUS CAN split relay	–	K40: CAN4_L = 5, 6 CAN4_H = 1, 4	ISOBUS CAN split relay relay contacts are open when C1000 is connected
M5M	Actuator, waste gate	WASTE GATE = 83	M5M: CAN3_L = 3 CAN3_H = 4	Actuator, waste gate
P6	A-pillar display	LCD = 59	P6: CAN1_L = 8 CAN1_H = 1 +15 (F109): 2 +30 (F126): 5 Power GND: 3	TC status display DEF level display user settings
R2G	Terminating resistor, CAN4	–		Terminating resistor, CAN4
R6M	Terminating resistor, CAN3	–		Terminating resistor, CAN3
R26	Terminating resistor, CAN1	–		Terminating resistor, CAN1
X1C	Connector, top dock interface	–	X1C: CAN4_L = C CAN4_H = D CAN5_L = E CAN5_H = F	Connector, top dock interface

Table continued on next page

Control unit	Description	CAN ID	Connector / PIN	Functions
X1G	Connector, ISOBUS ISO BOX (ISO11783), rear	–		Connector, ISOBUS ISO BOX (ISO11783), rear
X2C	Connector, autosteering harness cab – roof	–	X2C: CAN4_L = 2, 3 CAN4_H = 4, 9 CAN5_L = 5 CAN5_H = 6	Connector, autosteering harness cab – roof
X2M	Connector, engine – cab	–	X2M: CAN1_L = 6 CAN1_H = 5 CAN3_L = 31 CAN3_H = 30	Connector, engine – cab
X4X	Connector, ISO-adapter and ISOBUS interface	–	X4X: CAN4_L = 7 CAN4_H = 6	Connector, ISO-adapter and ISOBUS interface
X5X	Connector, ISO-adapter	–	X5X: CAN1_L = 4 CAN1_H = 3 CAN5_L = 7 CAN5_H = 6	Connector, ISO-adapter
X6X	Connector, telemetry	–	X6X: CAN1_L = 4 CAN1_H = 3 CAN4_L = 9 CAN4_H = 8 CAN5_L = 12 CAN5_H = 13	Connector, telemetry
X7X	Connector, options interface	–	X7X: CAN1_L = 4 CAN1_H = 3	Connector, options interface
X9C	Terminating resistor, CAN5	–		Terminating resistor, CAN5
X9G	Connector, autosteering bus extension	–	X9G: CAN4_L = 4 CAN4_H = 2	Connector, autosteering bus extension
X9M	Connector, exhaust pipe	–	X9M: CAN3_L = 3 CAN3_H = 4	Connector, exhaust pipe
X10C	Terminating resistor, CAN5	–		Terminating resistor, CAN5
X10G	Connector, ISOBUS ISO BOX (ISO11783), CAN, rear	–	X10G: CAN4_L = 4 CAN4_H = 2	Connector, ISOBUS ISO BOX (ISO11783), CAN, rear
X11	Connector, cab – inner roof	–	X11: CAN1_L = 8, 35 CAN1_H = 7, 34	Connector, cab – inner roof
X11C	Connector, autosteering interface for 3rd party GPS systems	–	X11C: CAN4_L = 9, 12 CAN4_H = 8, 11 CAN5_L = 7 CAN5_H = 6	Connector, autosteering interface for 3rd party GPS systems
X11G	Connector, ISOBUS ISO BOX (ISO11783), CAN, front	–	X11G: CAN4_L = 4 CAN4_H = 2	Connector, ISOBUS ISO BOX (ISO11783), CAN, front
X12G	Connector, ISOBUS CAN out, rear	–	X12G: CAN4_L = 4 CAN4_H = 2	Connector, ISOBUS CAN out, rear

Table continued on next page

Control unit	Description	CAN ID	Connector / PIN	Functions
X25	Connector, seat	–	X25: CAN1_L = 8 CAN1_H = 7 CAN2_L = 6 CAN2_H = 5	Connector, seat
X43	Connector, cab – TwinTrac	–	X43: CAN1_L = 13 CAN1_H = 14 CAN5_L = 8 CAN5_H = 9	Connector, cab – TwinTrac
X53	Connector, autosteering control devices		X53: CAN5_L = 4 CAN5_H = 5	Connector, autosteering control devices
X123	Connector, engine – actuators	–	X123: CAN3_L = 4 CAN3_H = 3	Connector, engine – actuators
XC1	CAN connector, options	–	XC1: CAN1_L = 3 CAN1_H = 1 CAN4_L = 4 CAN4_H = 2	CAN connector, options
XC2	CAN connector, options	–	XC2: CAN1_L = 3 CAN1_H = 1 CAN4_L = 4 CAN4_H = 2	CAN connector, options: ISOBUS
XC3	CAN connector, options	–	XC3: CAN1_L = 3 CAN1_H = 1 CAN4_L = 4 CAN4_H = 2	CAN connector, options: AutoComfort
XC4	CAN connector, options	–	XC4: CAN1_L = 3 CAN1_H = 1 CAN4_L = 4 CAN4_H = 2	CAN connector, options: Telemetry (last segment, CAN bus not connected further)
Y1C	Steering valve (additional equipment)	PVED-CL = 19	Y1C1: CAN5_L = 1 CAN5_H = 4	Auto-Guide QuickSteer

2.6.3.1 CAN1 structure, standard control units

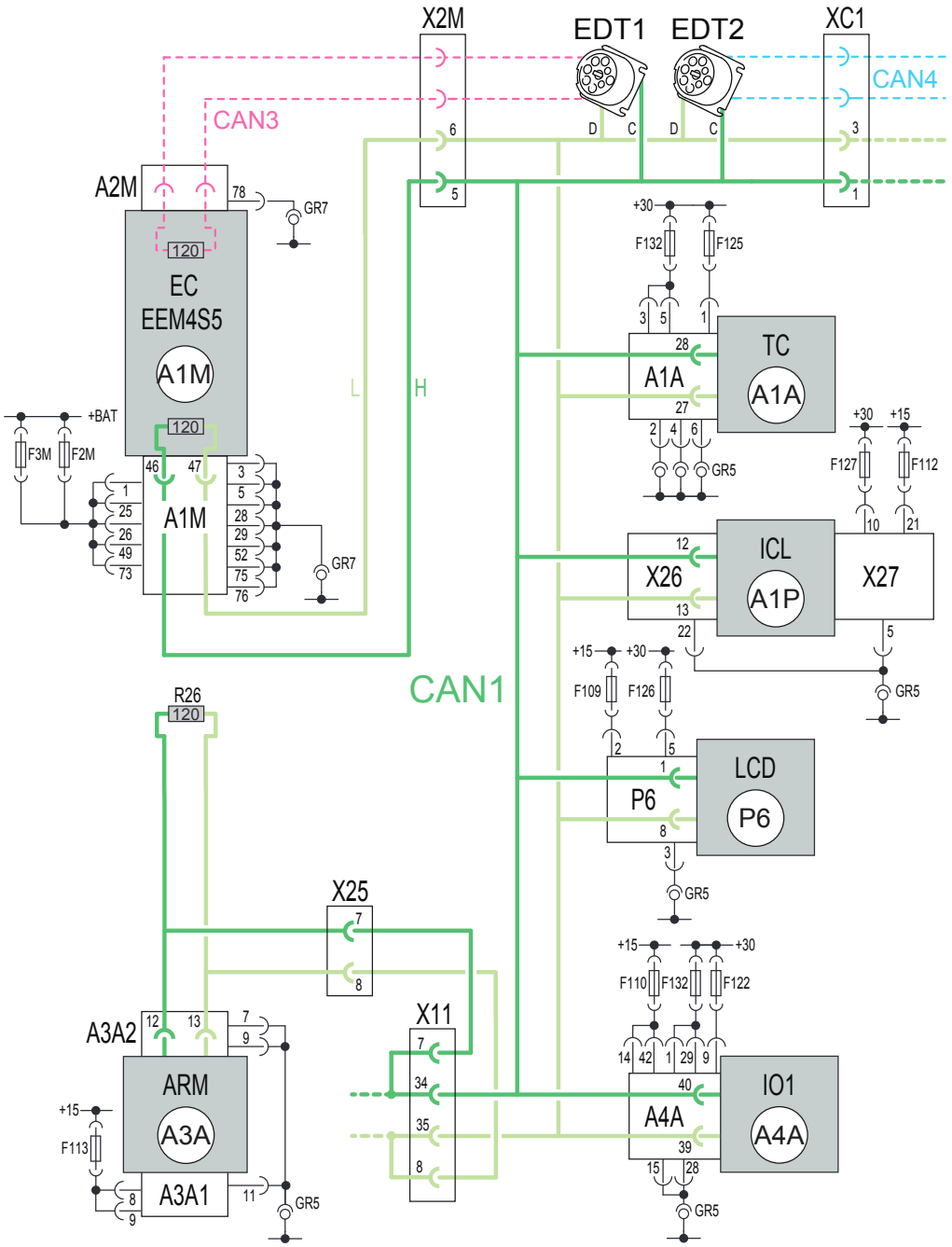

2.6.3.2 CAN1 structure, additional control units

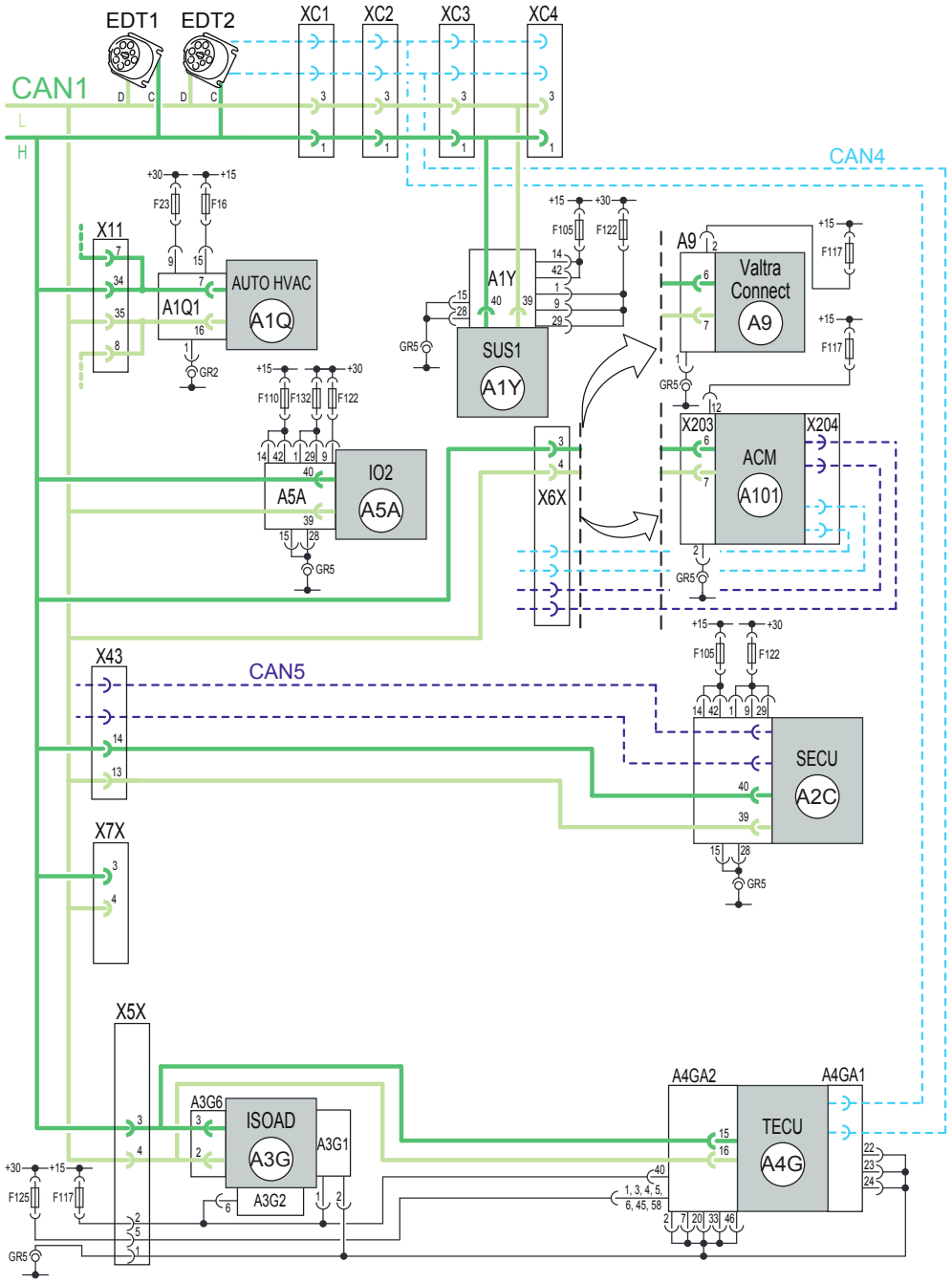

2.6.3.3 CAN3 structure

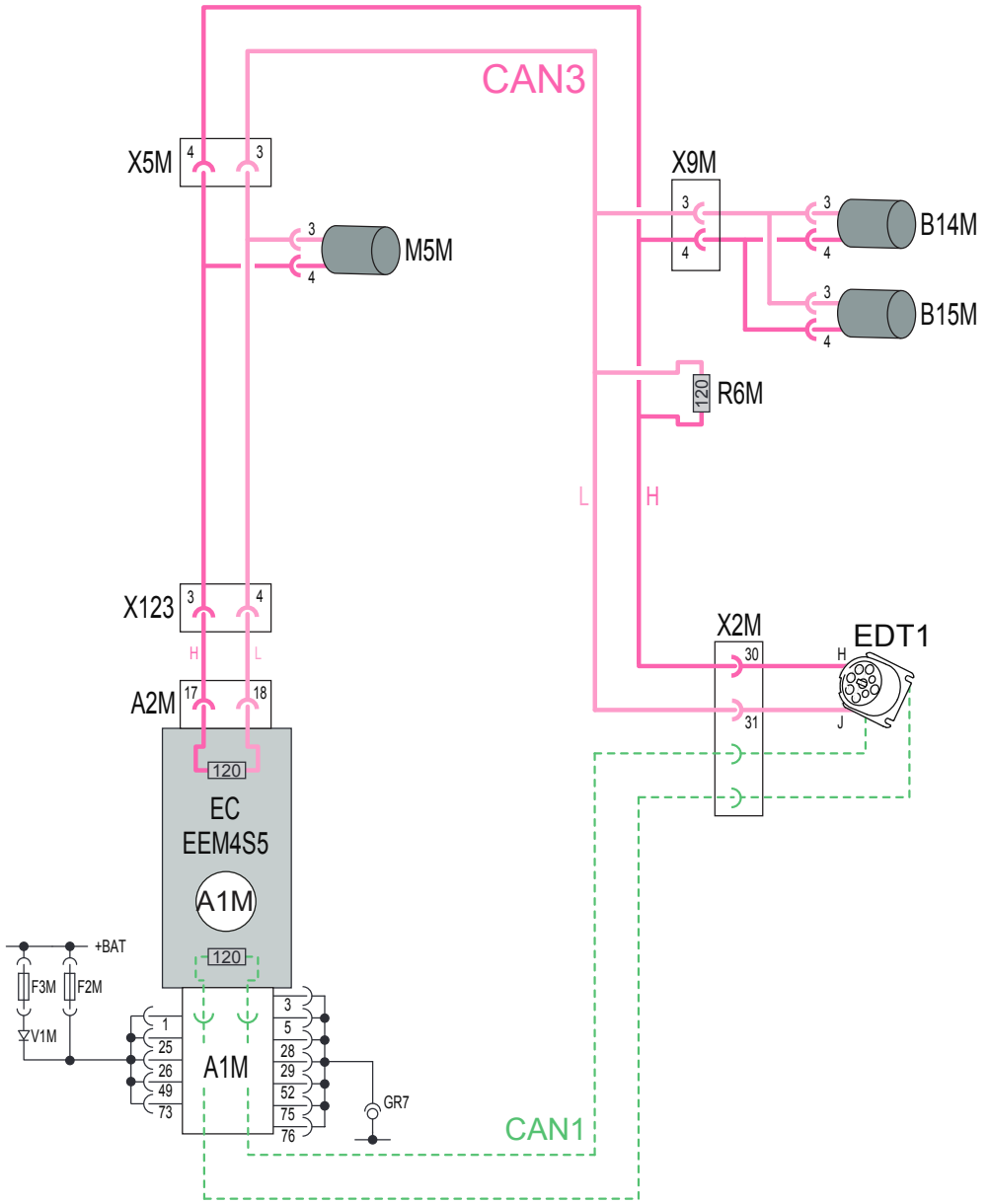

2.6.3.4 CAN4 structure

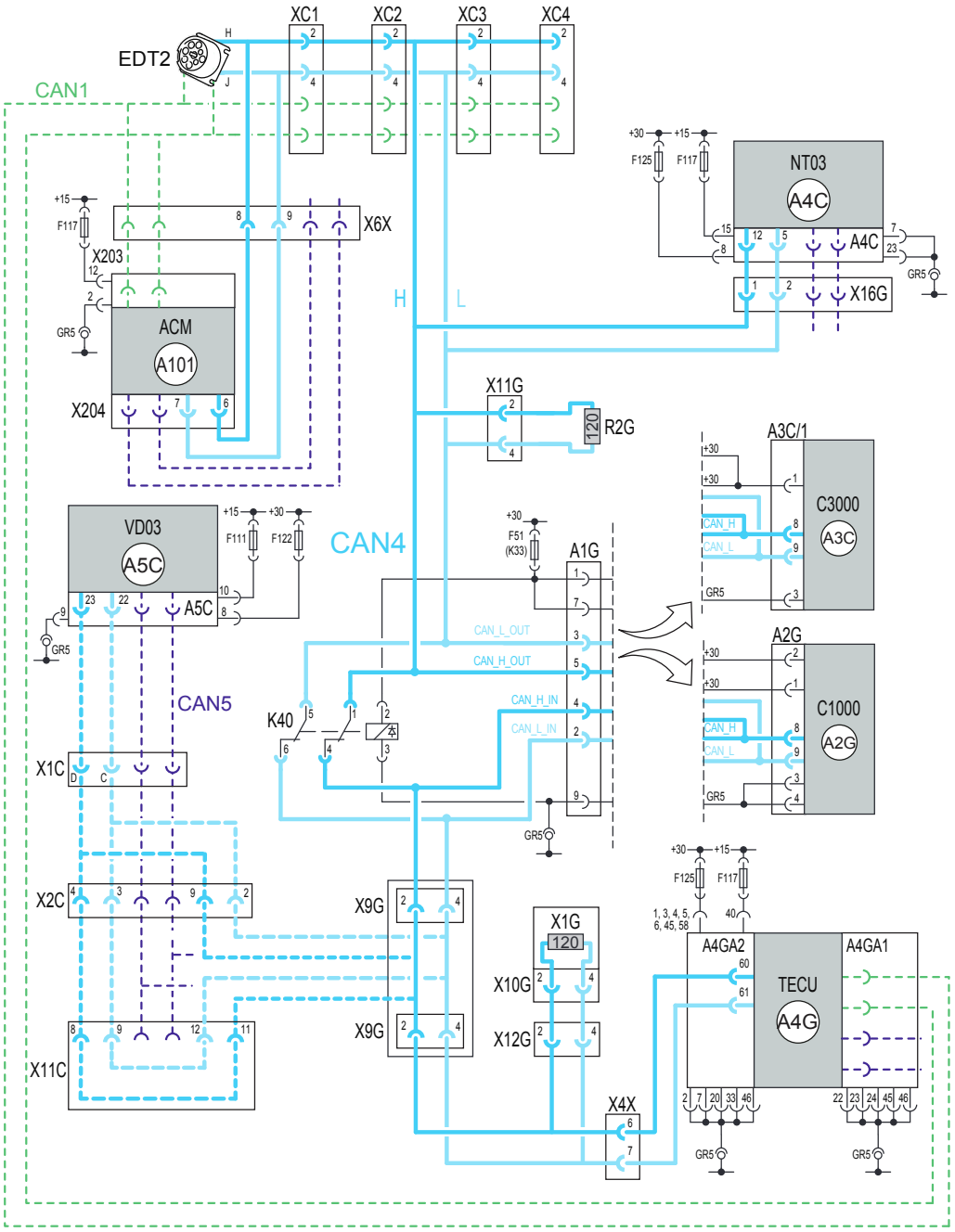

2.6.3.5 CAN5 structure

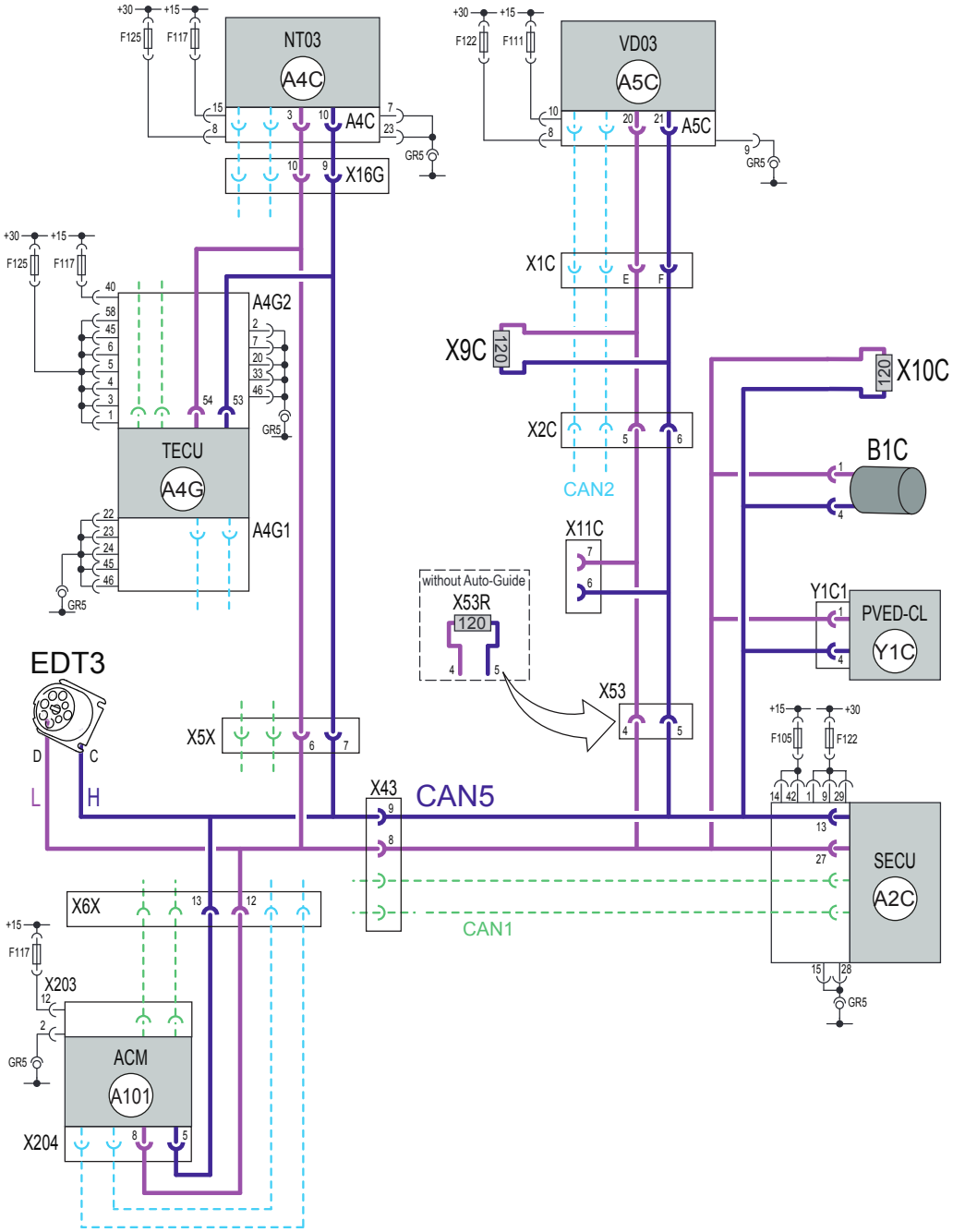

2.6.4 CAN connectors

T4 1B8 Active

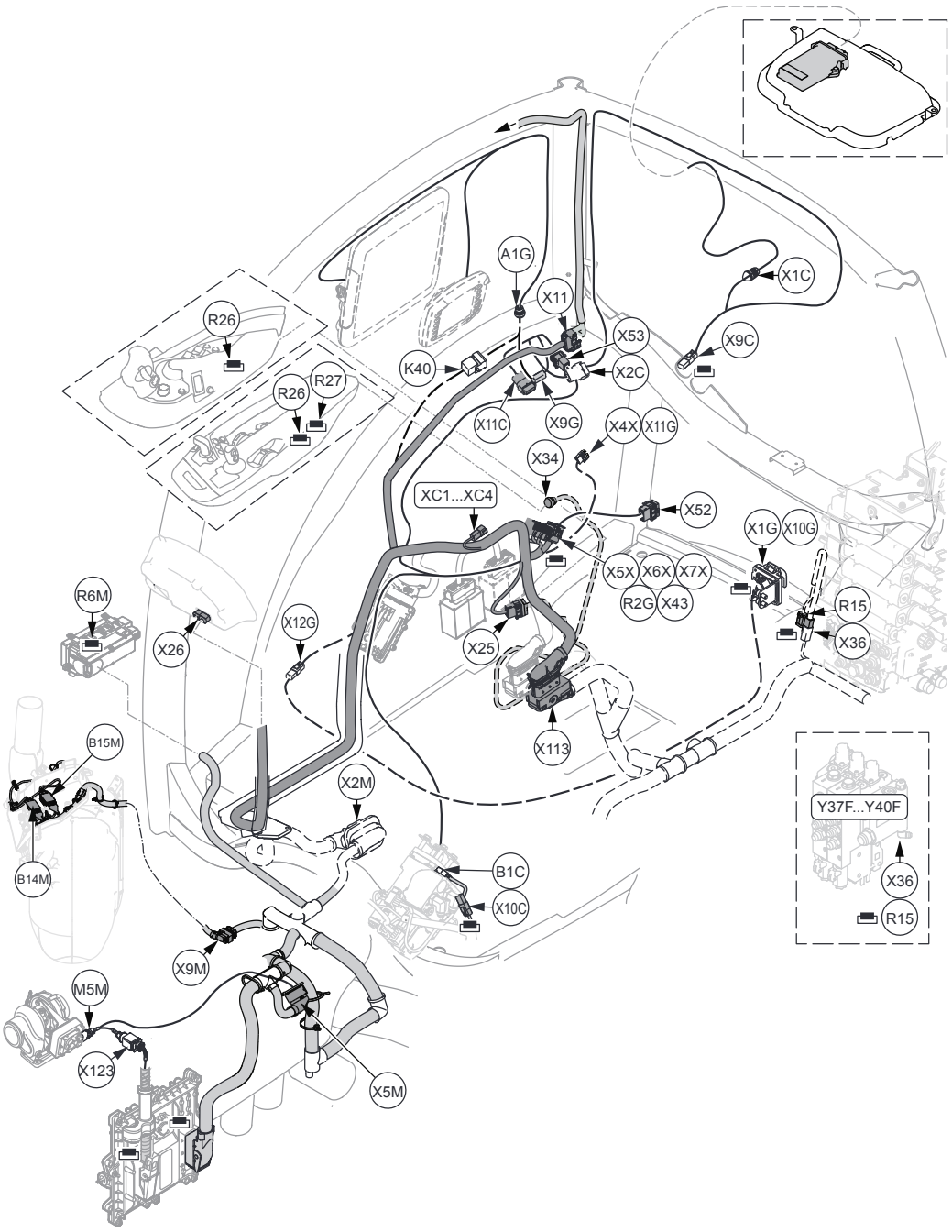

N4 1C8 Active

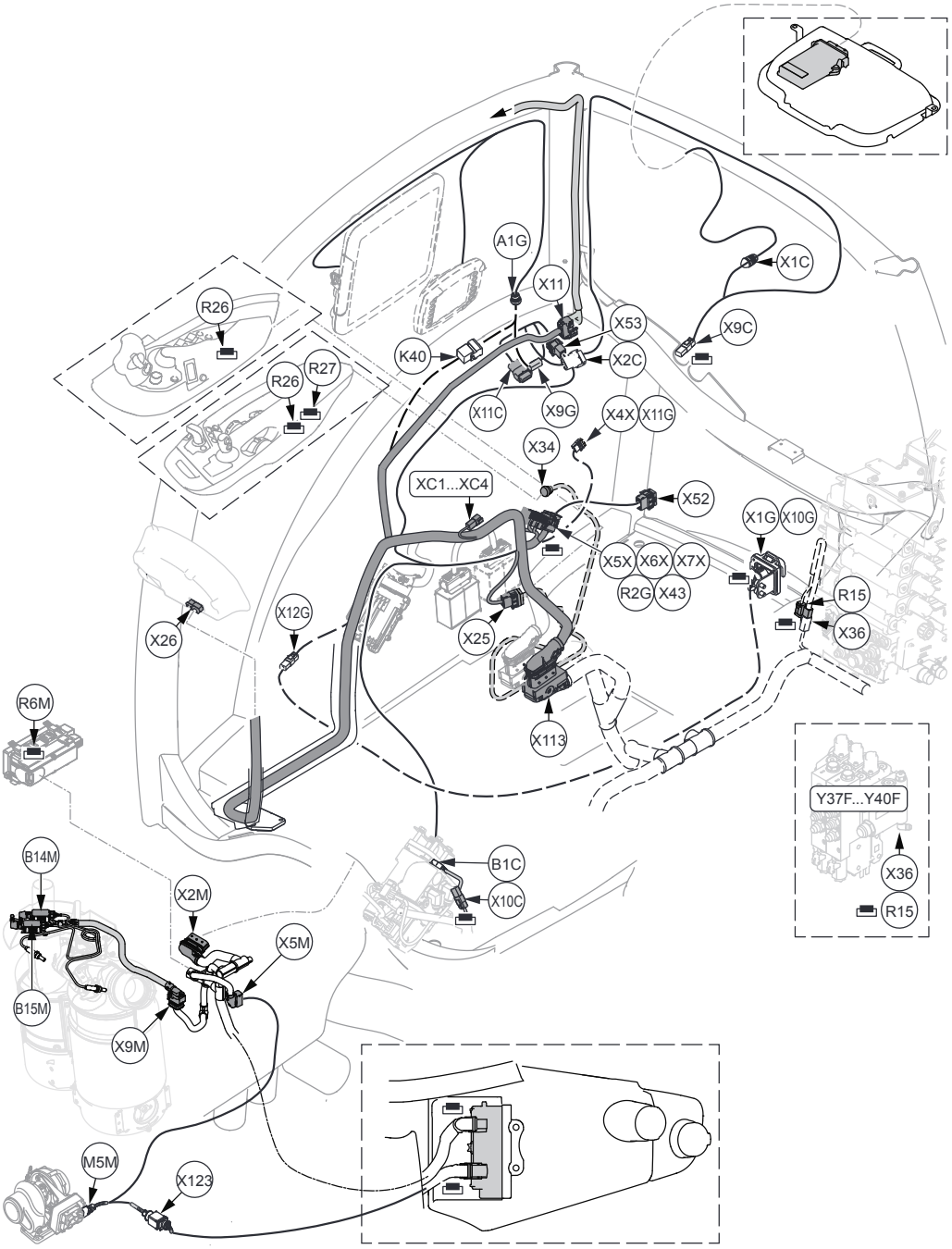

T4 1B8 HiTech

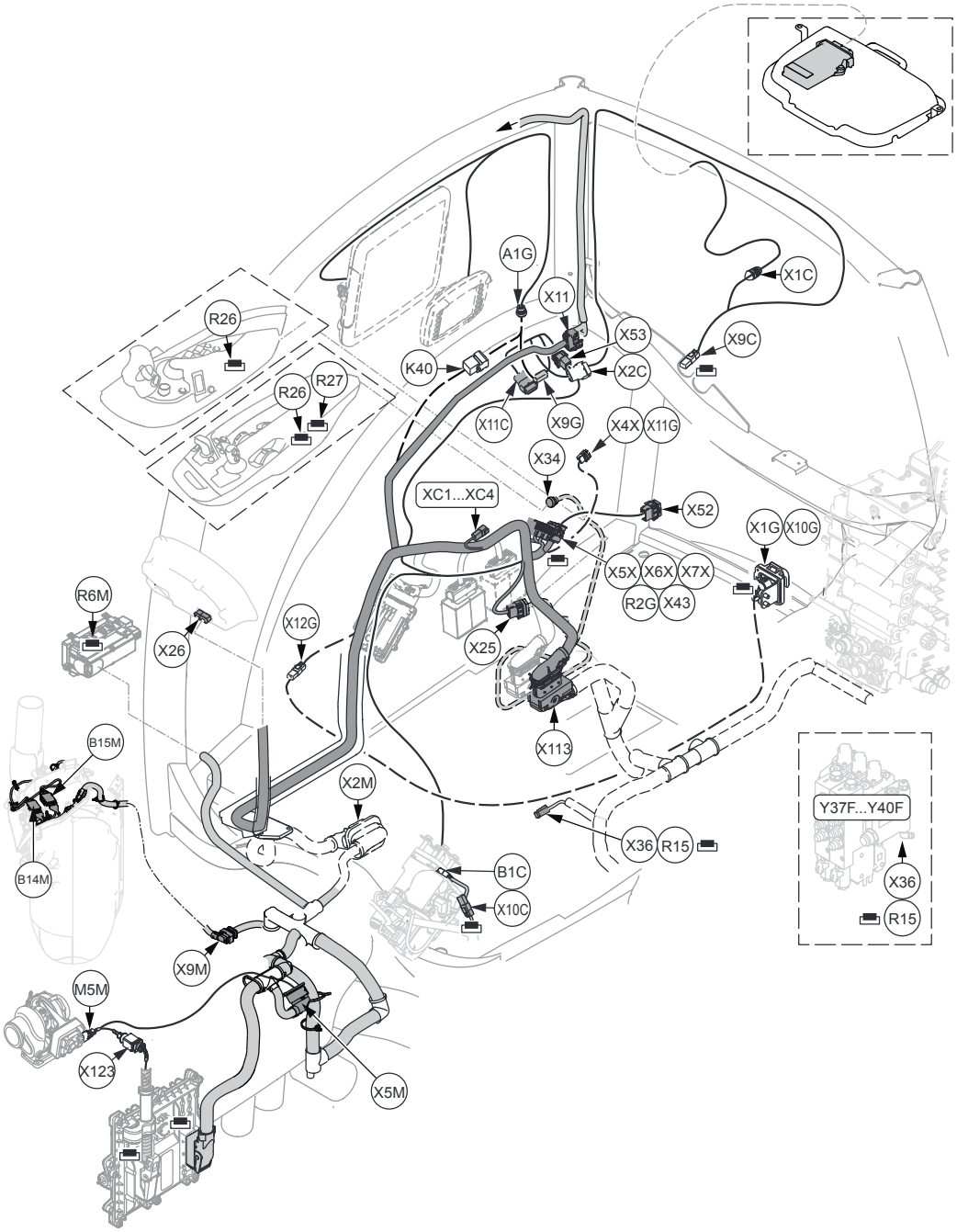

N4 1C8 HiTech

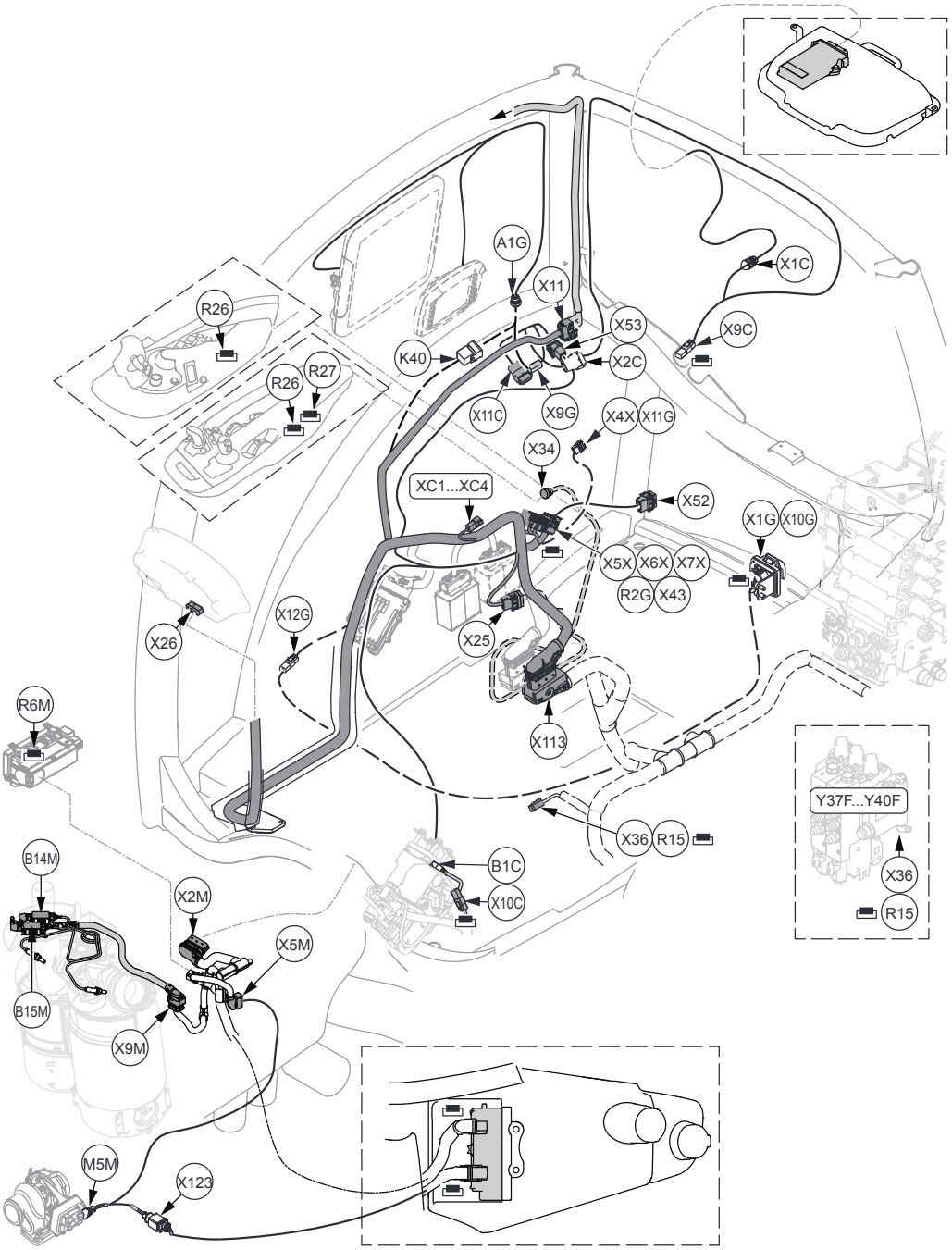

Symbol	Description
A1G	ISOBUS terminal interface
B1C	Sensor, steering angle (SASA), front
B14M	Sensor, NOx upstream
B15M	Sensor, NOx downstream
K40	Relay, ISOBUS CAN4 split
M5M	Actuator, waste gate
R2G	Terminating resistor module, ISOBUS
R6M	Terminating resistor CAN3, engine end
Table continued on next page	

Symbol	Description
R15	Terminating resistor, CAN2, valve end
R26	Terminating resistor, CAN1, cabin end
R27	Terminating resistor, CAN2, cabin end
X1C	Connector, top dock interface
X1G	Connector, ISOBUS ISO box (ISO11783), power, rear
X2C	Connector, Autosteering harness cabin – roof
X2M	Connector, engine – cab
X4X	Connector, ISOADAPTER and ISOBUS interface
X5M	Connector, cross-wiring, tractor - engine
X5X	Connector, ISO-adapter
X6X	Connector, telemetry
X7X	Connector, options (not in use)
X9C	Connector, Autosteering CAN5 terminating resistor
X9G	Connector, Autosteering bus interface
X9M	Connector, exhaust pipe
X10C	Connector, terminating resistor CAN5, sensor end
X10G	Connector, ISOBUS ISO box (ISO11783), CAN, rear
X11	Connector, cab – inner roof
X11C	Connector, Autosteering interface for 3rd part GPS systems
X11G	Connector, ISOBUS ISO box (ISO11783), CAN, front
X12G	Connector, ISOBUS CAN out, rear
X16G	Connector, interface ISOBUS / additional SmartTouch display
X25	Connector, seat
X26	Connector, instrument panel
X34	Connector, armrest
X36	Connector, CAN-valve harness
X43	Connector, cab – TwinTrac
X52	Connector, TwinTrac control devices
X53	Connector, Autosteering control devices
X113	Connector, transmission connector 2
X123	Connector, engine - actuators
XC1	CAN connector, options
XC2	CAN connector, options
XC3	CAN connector, options
XC4	CAN connector, options
Y37	Auxiliary hydraulic valve, AUX 1
Y38	Auxiliary hydraulic valve, AUX 2
Y39	Auxiliary hydraulic valve, AUX 3
Y40	Auxiliary hydraulic valve, AUX 4
Y41	Auxiliary hydraulic valve, AUX 5