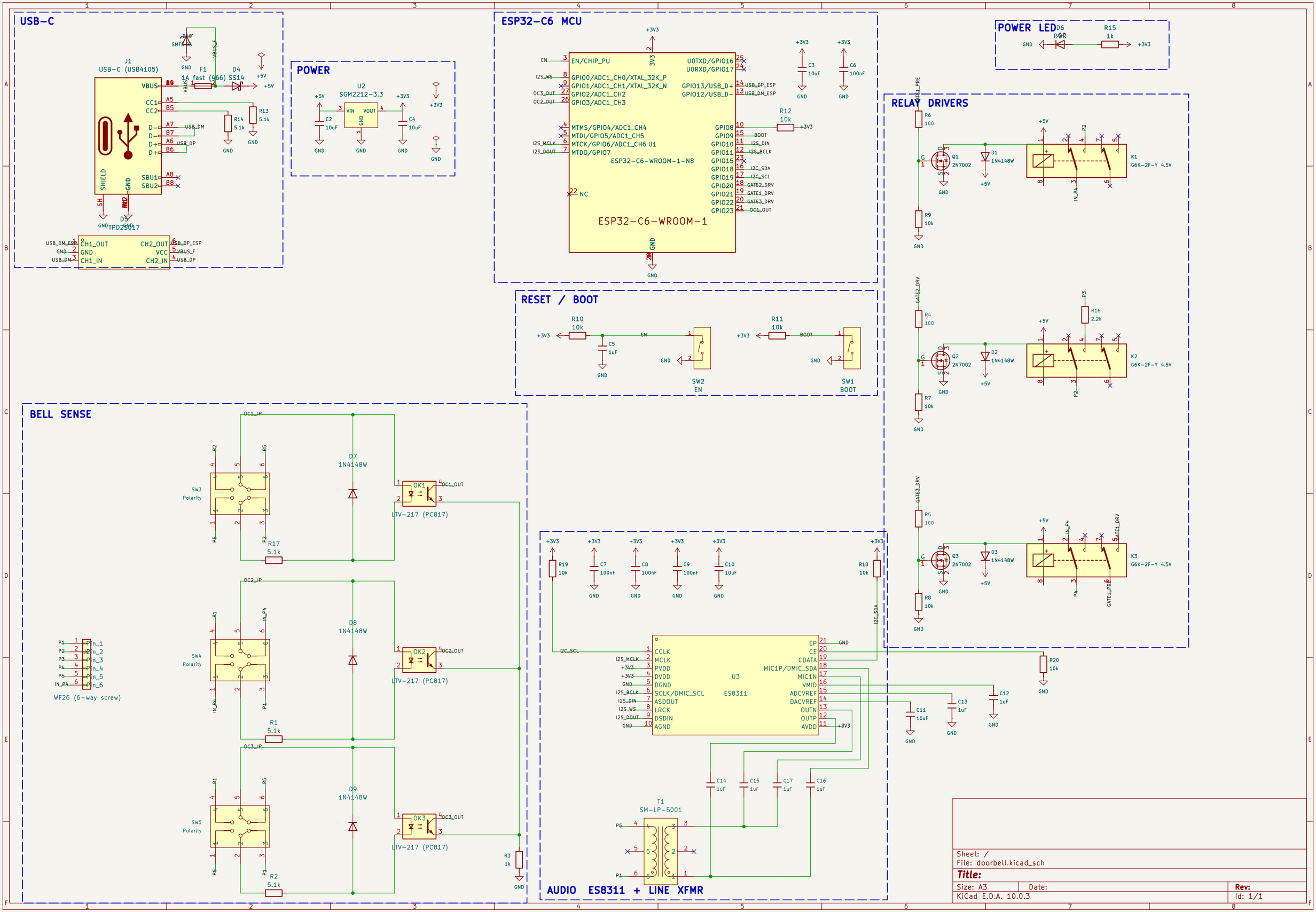
USB-C
J1
USB-C (USB4105)
F1
1A fast (466)
D4
SS14
D5
TPD2S017
POWER
U2
SGM2212-3.3
ESP32-C6 MCU
ESP32-C6-WROOM-1-N8
ESP32-C6-WROOM-1
POWER LED
RELAY DRIVERS
K1
G6K-2F-Y 4.5V
K2
G6K-2F-Y 4.5V
K3
G6K-2F-Y 4.5V
RESET / BOOT
SW2
EN
SW1
BOOT
BELL SENSE
SW3
Polarity
SW4
Polarity
SW5
Polarity
D7
1N4148W
D8
1N4148W
D9
1N4148W
OK1
OK2
OK3
LTV-217 (PC817)
WF26 (6-way screw)
U3
ES8311
T1
SM-LP-5001
AUDIO ES8311 + LINE XFMR
Sheet: /
File: doorbell.kicad_sch
Title:
Size: A3
Date:
Rev:
KiCad E.D.A. 10.0.3
Id: 1/1