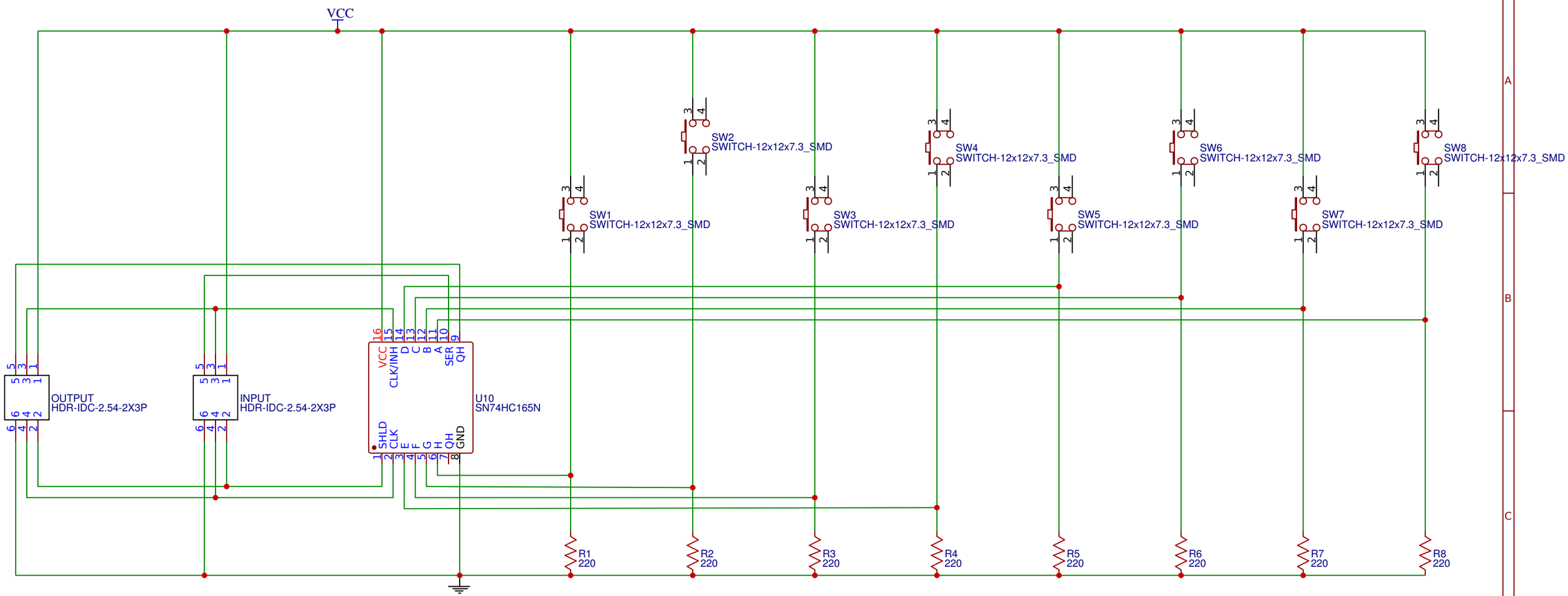

TITLE: SwitchboardX8	REV: 2.0
Date: 2017-07-09	Sheet: 1/1
EASYEDA V4.7.3	Drawn By: Jeff Warren