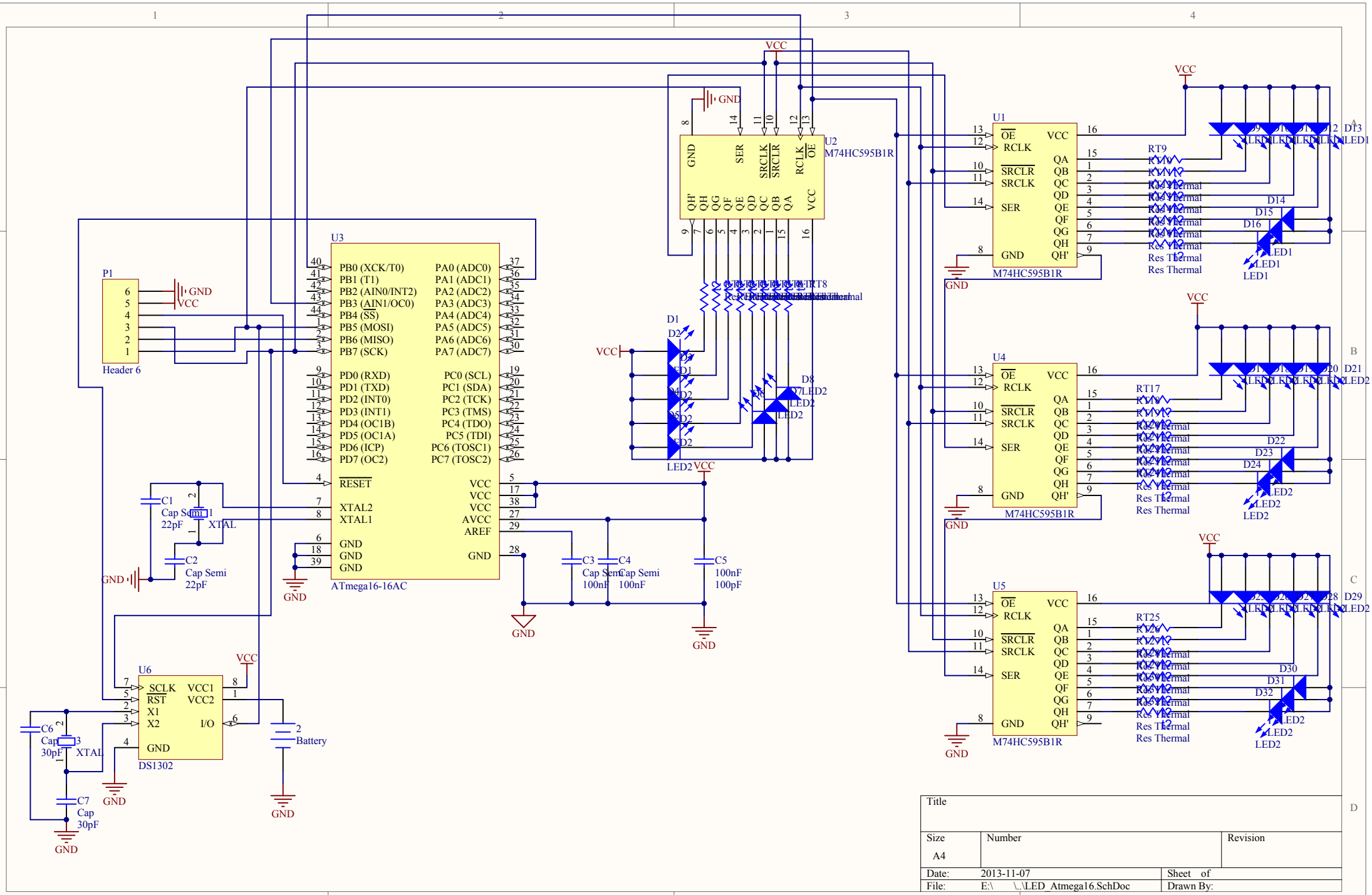
U3
ATmega16-16AC
PB0 (XCK/T0)
PB1 (T1)
PB2 (AIN0/INT2)
PB3 (AIN1/OC0)
PB4 (SS)
PB5 (MOSI)
PB6 (MISO)
PB7 (SCK)
PD0 (RXD)
PD1 (TXD)
PD2 (INT0)
PD3 (INT1)
PD4 (OC1B)
PD5 (OC1A)
PD6 (ICP)
PD7 (OC2)
RESET
XTAL2
XTAL1
GND
PA0 (ADC0)
PA1 (ADC1)
PA2 (ADC2)
PA3 (ADC3)
PA4 (ADC4)
PA5 (ADC5)
PA6 (ADC6)
PA7 (ADC7)
PC0 (SCL)
PC1 (SDA)
PC2 (TCK)
PC3 (TMS)
PC4 (TDO)
PC5 (TDI)
PC6 (TOSC1)
PC7 (TOSC2)
VCC
AVCC
AREF
P1
Header 6
U2
M74HC595B1R
U1
U4
U5
RT9
RT17
RT25
Res Thermal
D1
D2
D8
D13
D14
D15
D16
D21
D22
D23
D24
D29
D30
D31
D32
LED1
LED2
C1
Cap Semi
22pF
XTAL
C2
Cap Semi
22pF
C3
Cap Semi
100nF
C4
Cap Semi
100nF
C5
100nF
100pF
U6
DS1302
SCLK
RST
X1
X2
VCC1
VCC2
I/O
Battery
C6
Cap
30pF
C7
Cap
30pF
Title
Size
A4
Number
Revision
Date: 2013-11-07
Sheet of
File: E:\ \..\LED_Atmega16.SchDoc
Drawn By:

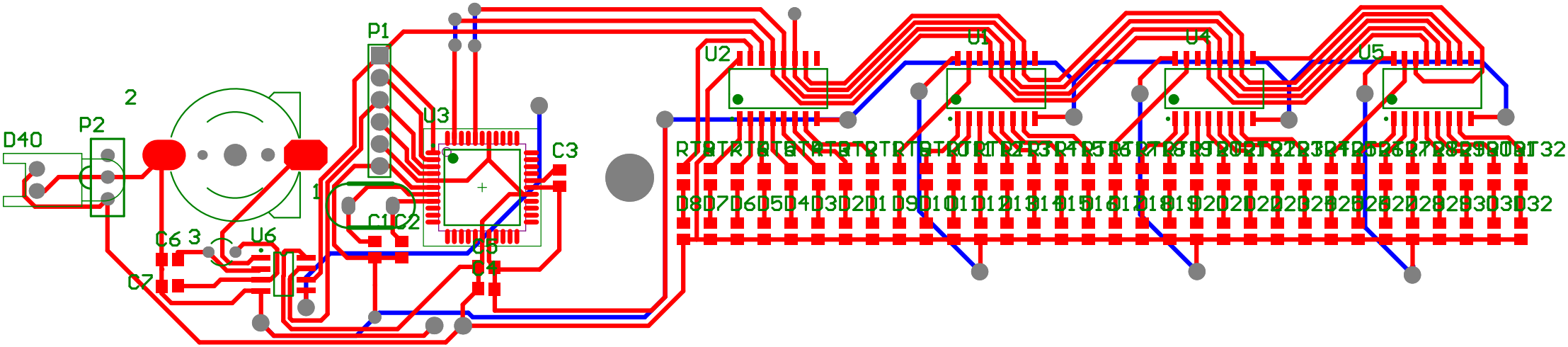
D40
P2
2
1
3
C6
C7
U6
P1
U3
C1
C2
C3
U2
U1
U4
U5