AD-4325A/V

MAINTENANCE MANUAL

Maintenance-AD-4325A/V.v.1.b 911017 OGA

WEIGHING INDICATOR

A&D Company, Limited

CONTENTS

Outline ..... Page 2

Description of Functions

1. Principles of Functions ..... Page 3

2. Block Diagram ..... Page 4

3. Flow Chart ..... Page 6

Troubleshooting using Check Software

1. Check Mode
   (Refer to Section E in the instruction manual.) Page 25

2. Test Mode ..... Page 26

AD-4325A

1. Parts List ..... Page 35

2. Schematics ..... Page 45

3. Parts Location ..... Page 55

4. Exploded View ..... Page 63

AD-4325V

1. Parts List ..... Page 69

2. Schematics ..... Page 79

3. Parts Location ..... Page 89

4. Exploded View ..... Page 93

©A&D Co, Ltd., International Division (1991)

Outline

The AD4325A/V is an indexing control indicator and can store 100 kinds of different set values (such as final weight, free fall, preliminary, over, and under).

High-speed A/D conversion is provided by the same hardware and software as those for the AD4323 with 70 sampling times and resolution of 1/10,000. It has been provided with six types of comparators in order to cope with various applications.

Calibration and function data are stored in an EEPROM, and various set and accumulated values such as final weight, free fall, etc. are stored in the CMOS RAM backed up by batteries.

The A/D, OP-01, OP-04, and OP-07 boards are the same as those for the AD4323. The OP-02 and OP-03 boards are used only for the AD-4325A/V.

A watchdog timer is provided to prevent the CPU from running away.

Description of Functions

1. Principles of Functions

• Load Cell and Indicator

The strain gauge style load cell has strain gauges attached to the elastic body designed to be strained in proportion to a load and has those gauges wired to form a Wheatstone bridge.

A voltage of about 12V DC is applied to this Wheatstone bridge from the indicator. The output from the bridge is connected to the input of the indicator.

If a load is applied to the load cell, the elastic body is deformed as shown in the figure below and the gauges A and A' change in the elongating direction, and those B and B' in the contracting direction. Since the strain gauge increases a resistance in proportion to its elongation and decreases it in proportion to compression, a voltage proportional to the load is generated at the output of the Wheatstone bridge.

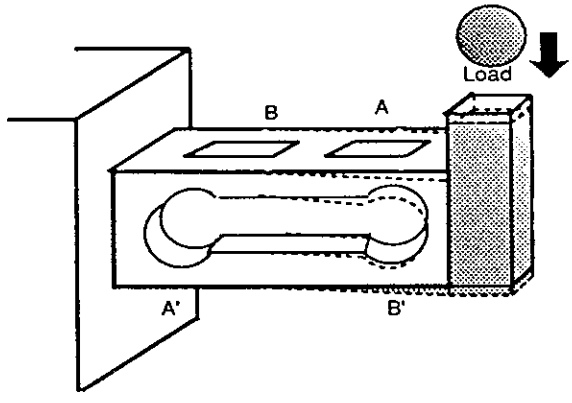

The indicator converts this signal from analog into digital and displays it as a weight value.

Since the resistance between the input terminals(+EXC and -EXC) of the load cell is as low as about 350Ω, if it is installed in the place away from the indicator, a cable resistance will change due to a temperature change and the actual voltage applied to the load cell will change. A change of this applied voltage affects the output and results in an weighing error. In order to avoid such a phenomenon, sensing cables are connected in parallel with +EXC and -EXC to monitor a voltage change between them on the part of the indicator. If the voltage between them falls, the A/D unit internally compensates for error due to a resistance change between the cables.

• A/D Converter

The weight indicator converts the analog signal from the load cell into digital data proportional to the weight value. The A/D converter is the same as that used in the AD4323.

- **Data Processing after A/D Conversion**

A/D conversion is of double integrating type of system. It applies zero span obtained by calibration to an A/D-converted count as a weight value and uses it as display and output data.

However, output timing depends on the operation mode. For example, the stop mode rewrites the data at any time(8times/second), but the operation mode rewrites it at judgement completion time and holds it until next judgment.

2. Block Diagram

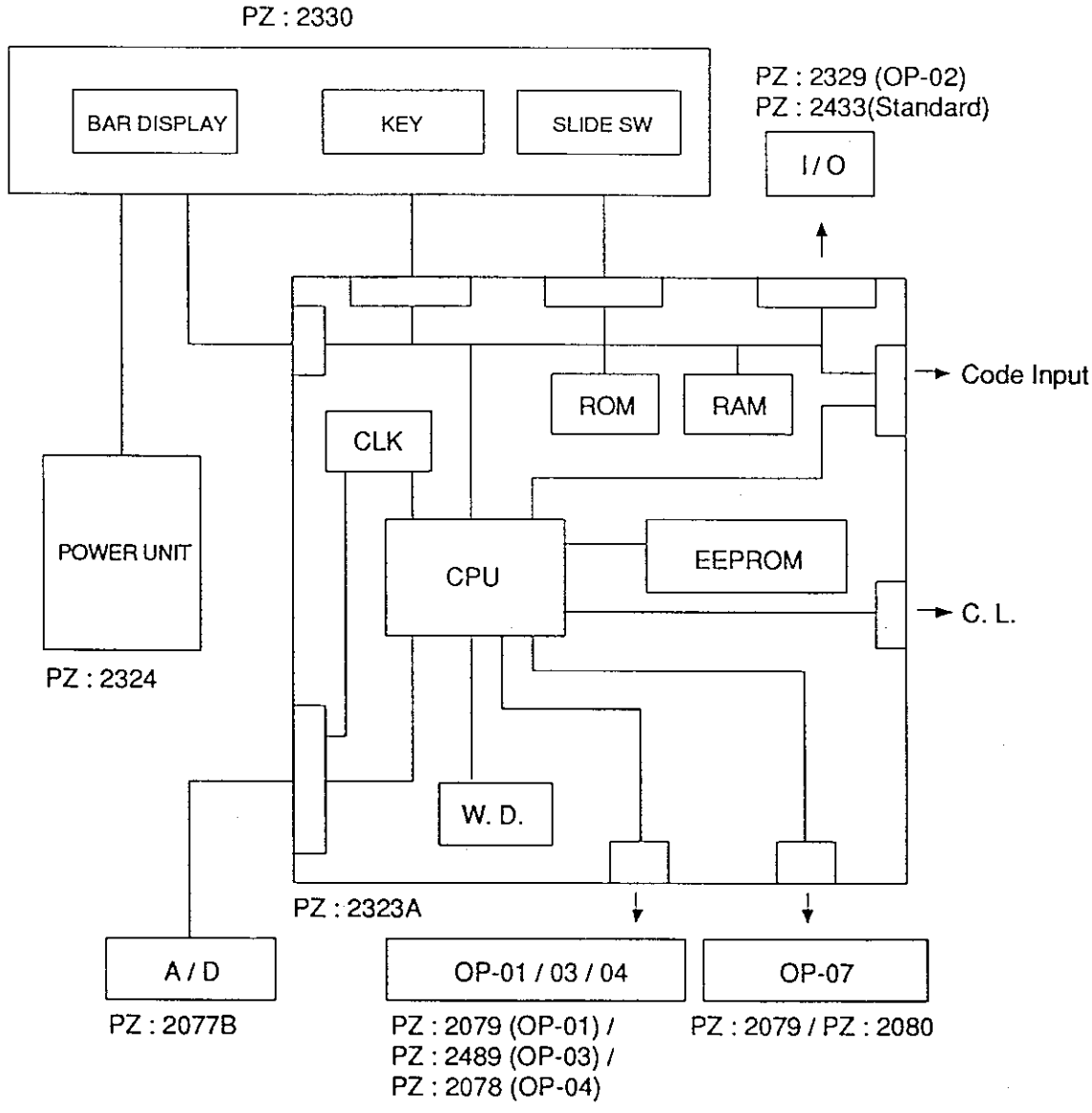

[PZ: 2323A] Main Board

This board is similar to those for the AD4324 and AD4323TK. The Watchdog circuit monitors the power-on reset and CPU. The CLK has a speed of 12 MHz and used as a clock for the CPU and A/D counter. The RAM 5564 (U8) is backed up by the lithium battery. Various set and accumulated values such as final weight, free fall, etc. are stored in the RAM. Calibration and function data are stored in an EEPROM. Display data is parallel/serial-converted by the 66300 (U1) and sent to the display board. For the I/O, key, etc., data is exchanged by a latch and buffer over the data bus, but there were some cases where different parts had been used in transistors specifying addresses. When key input is abnormal, check the type numbers of these transistors with built-in resistor. The slide switch is set to IN and JP1 to 2.

[PZ-2324] Power Board

This board may be the same as those for the AD4324 and AD4323TK. No fuse is needed. The F terminal (12 V) may be connected to the F terminal on the relay board (OP-2) and used for 12 V for relay drive.

[PZ: 2330] Display Board

This board converts serial data sent from the main board into parallel data. It is of dynamic drive and data is sent from the main board every 0.832 ms. The six keys on the left (K1 through K2) read data in the serial mode and may be software switched for selection of digits indicated by LEDs. The four slide switches (S1 through S4) read data in parallel mode.

[PZ:2077B] A/D Board

This board is similar to the AD4323 A/D board except that the connector has been replaced by a terminal strip.

[PZ:2361] Terminal Board (Standard)

The control I/O connector for the AD4325A is a terminal strip, which is mounted on the substrate. COM1 and COM2 are common.

[PZ: 2331] Relay Board (OP-02)

The input of this board is the same as that for the terminal board and its output is converted into a relay contact output. Power supply is required to drive this relay board. The power is obtained by connecting the F terminal (12 V) on the power board to the F terminal on the relay board (OP-02).

[PZ: 2079] BCD Output Board (OP-01)

This board is the same as that for the AD4323.

[PZ: 2078] Serial I/O Board (OP-04)

This board is the same as that for the AD4323.

[PZ: 2080] Analog Output Board (OP-07)

This board is the same as that for the AD4323.

[PZ: 2089] RS-422 Board (OP-03)

This board is used only with the AD4325A. In this board, RS-232C is used as the RS-422 level (without address or in the command mode with address).

3. Flow Chart

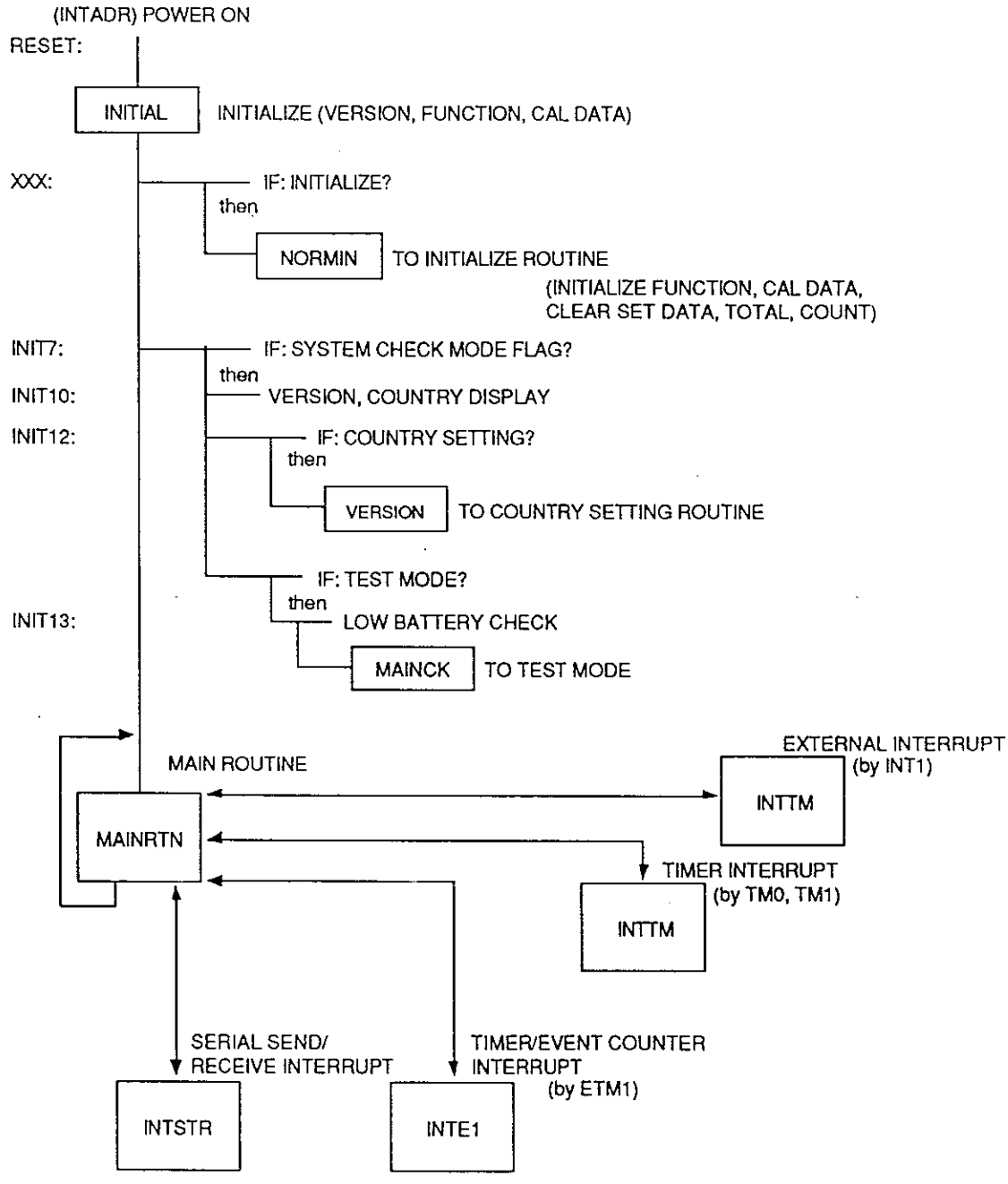
(INTADR) POWER ON
RESET:
INITIAL
INITIALIZE (VERSION, FUNCTION, CAL DATA)
XXX:
IF: INITIALIZE?
then
NORMIN
TO INITIALIZE ROUTINE
(INITIALIZE FUNCTION, CAL DATA,
CLEAR SET DATA, TOTAL, COUNT)
INIT7:
IF: SYSTEM CHECK MODE FLAG?
then
INIT10:
VERSION, COUNTRY DISPLAY
INIT12:
IF: COUNTRY SETTING?
then
VERSION
TO COUNTRY SETTING ROUTINE
IF: TEST MODE?
then
INIT13:
LOW BATTERY CHECK
MAINCK
TO TEST MODE
MAIN ROUTINE
EXTERNAL INTERRUPT
(by INT1)
INTTM
MAINRTN
TIMER INTERRUPT
(by TM0, TM1)
INTTM
SERIAL SEND/
RECEIVE INTERRUPT
TIMER/EVENT COUNTER
INTERRUPT
(by ETM1)
INTSTR
INTE1

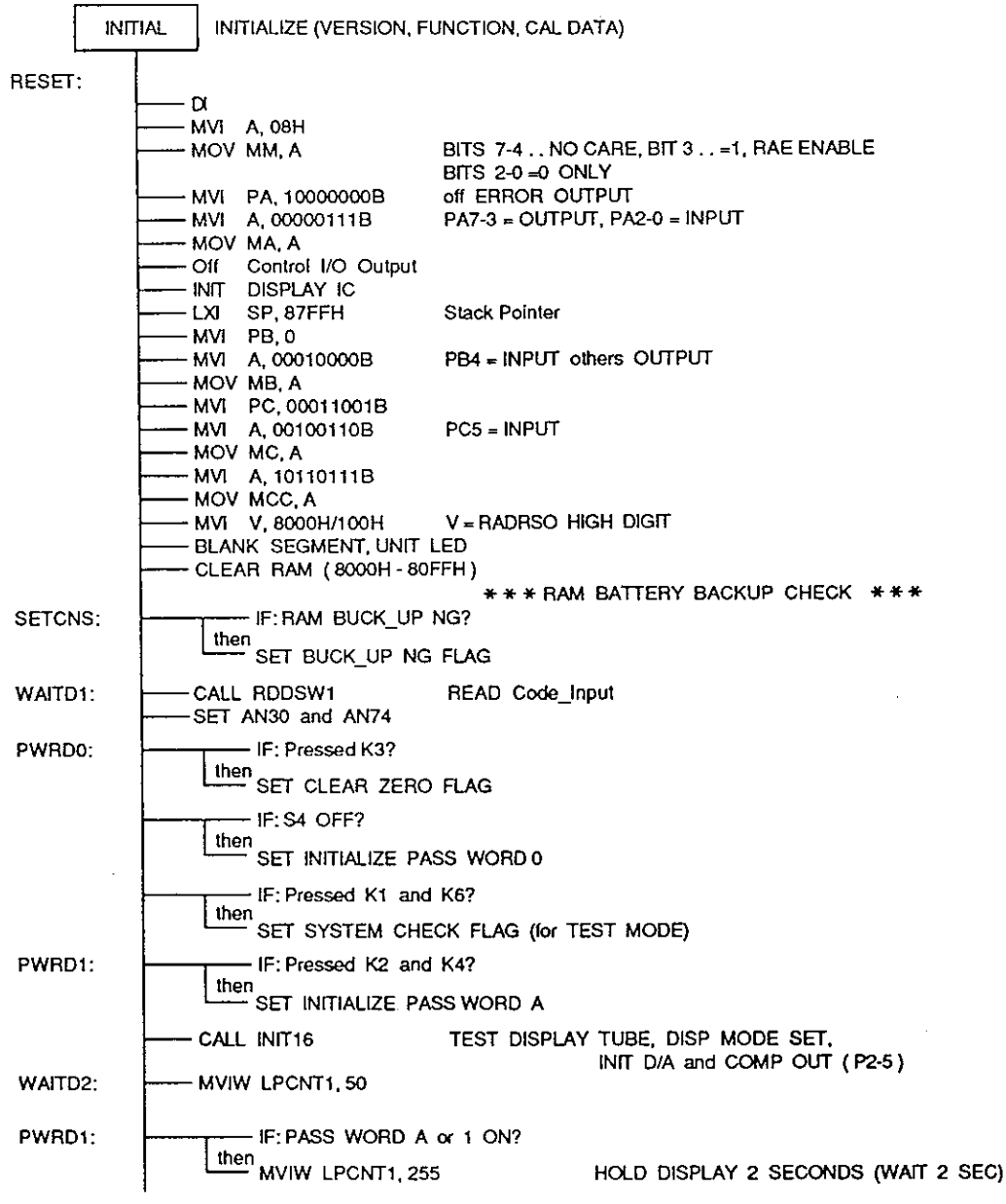
INITIAL
INITIALIZE (VERSION, FUNCTION, CAL DATA)
RESET:
DI
MVI A, 08H
MOV MM, A
BITS 7-4 . . NO CARE, BIT 3 . . =1, RAE ENABLE
BITS 2-0 =0 ONLY
MVI PA, 10000000B
off ERROR OUTPUT
MVI A, 00000111B
PA7-3 = OUTPUT, PA2-0 = INPUT
MOV MA, A
Off Control I/O Output
INIT DISPLAY IC
LXI SP, 87FFH
Stack Pointer
MVI PB, 0
MVI A, 00010000B
PB4 = INPUT others OUTPUT
MOV MB, A
MVI PC, 00011001B
MVI A, 00100110B
PC5 = INPUT
MOV MC, A
MVI A, 10110111B
MOV MCC, A
MVI V, 8000H/100H
V = RADRSO HIGH DIGIT
BLANK SEGMENT, UNIT LED
CLEAR RAM (8000H - 80FFH)
* * * RAM BATTERY BACKUP CHECK * * *
SETCNS:
IF: RAM BUCK_UP NG?
then
SET BUCK_UP NG FLAG
WAITD1:
CALL RDDSW1
READ Code_Input
SET AN30 and AN74
PWRD0:
IF: Pressed K3?
then
SET CLEAR ZERO FLAG
IF: S4 OFF?
then
SET INITIALIZE PASS WORD 0
IF: Pressed K1 and K6?
then
SET SYSTEM CHECK FLAG (for TEST MODE)
PWRD1:
IF: Pressed K2 and K4?
then
SET INITIALIZE PASS WORD A
CALL INIT16
TEST DISPLAY TUBE, DISP MODE SET,
INIT D/A and COMP OUT (P2-5)
WAITD2:
MVIW LPCNT1, 50
PWRD1:
IF: PASS WORD A or 1 ON?
then
MVIW LPCNT1, 255
HOLD DISPLAY 2 SECONDS (WAIT 2 SEC)

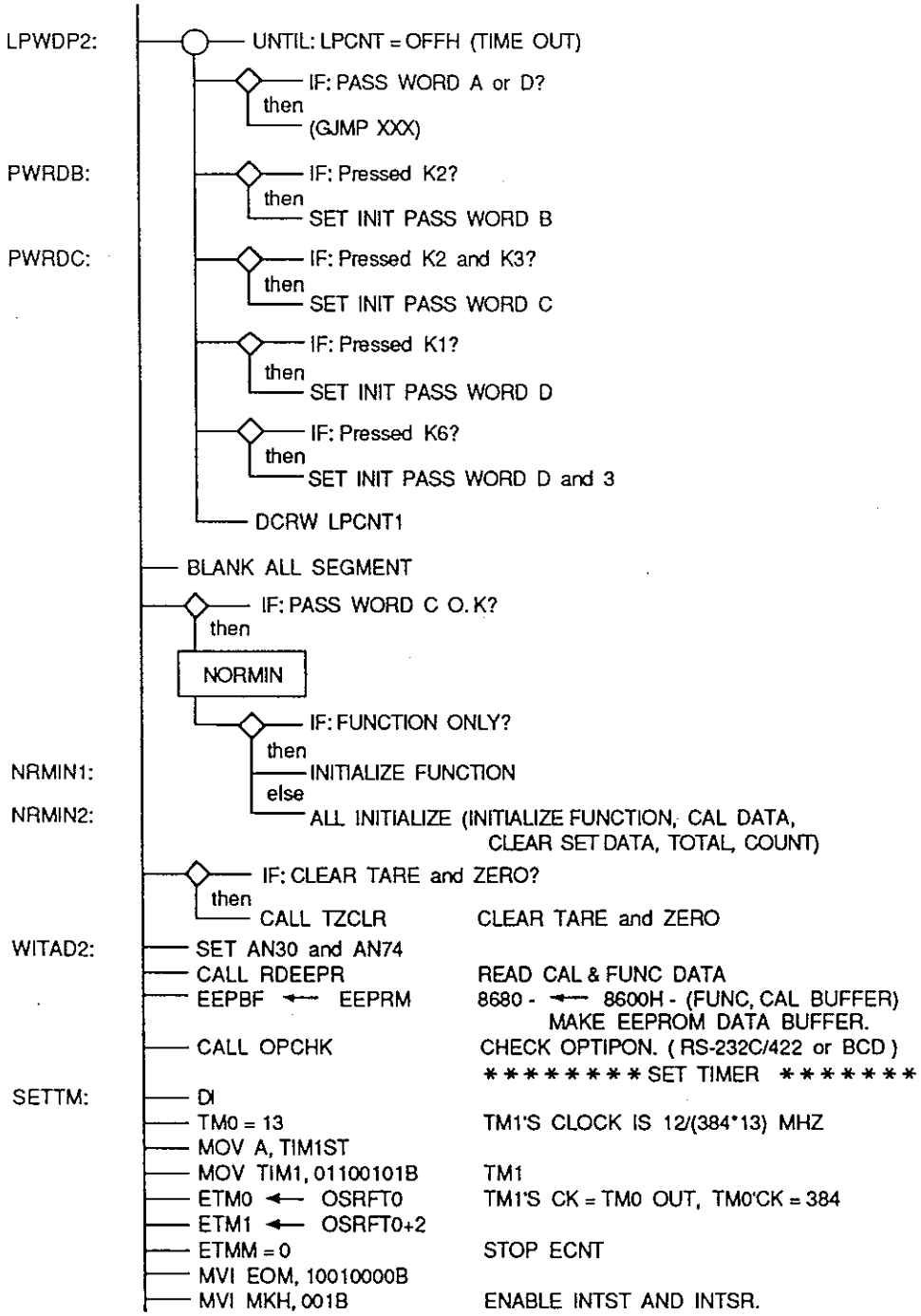
LPWDP2:
UNTIL: LPCNT = OFFH (TIME OUT)
IF: PASS WORD A or D?
then
(GJMP XXX)
PWRDB:
IF: Pressed K2?
then
SET INIT PASS WORD B
PWRDC:
IF: Pressed K2 and K3?
then
SET INIT PASS WORD C
IF: Pressed K1?
then
SET INIT PASS WORD D
IF: Pressed K6?
then
SET INIT PASS WORD D and 3
DCRW LPCNT1
BLANK ALL SEGMENT
IF: PASS WORD C O. K?
then
NORMIN
IF: FUNCTION ONLY?
then
NRMIN1:
INITIALIZE FUNCTION
else
NRMIN2:
ALL INITIALIZE (INITIALIZE FUNCTION, CAL DATA,
CLEAR SET DATA, TOTAL, COUNT)
IF: CLEAR TARE and ZERO?
then
CALL TZCLR
CLEAR TARE and ZERO
WITAD2:
SET AN30 and AN74
CALL RDEEPR
READ CAL & FUNC DATA
EEPBF ← EEPRM
8680 - ← 8600H - (FUNC, CAL BUFFER)
MAKE EEPROM DATA BUFFER.
CALL OPCHK
CHECK OPTIPON. (RS-232C/422 or BCD)
******** SET TIMER *******
SETTM:
DI
TM0 = 13
TM1'S CLOCK IS 12/(384*13) MHZ
MOV A, TIM1ST
MOV TIM1, 01100101B
TM1
ETM0 ← OSRFT0
TM1'S CK = TM0 OUT, TM0'CK = 384
ETM1 ← OSRFT0+2
ETMM = 0
STOP ECNT
MVI EOM, 10010000B
MVI MKH, 001B
ENABLE INTST AND INTSR.

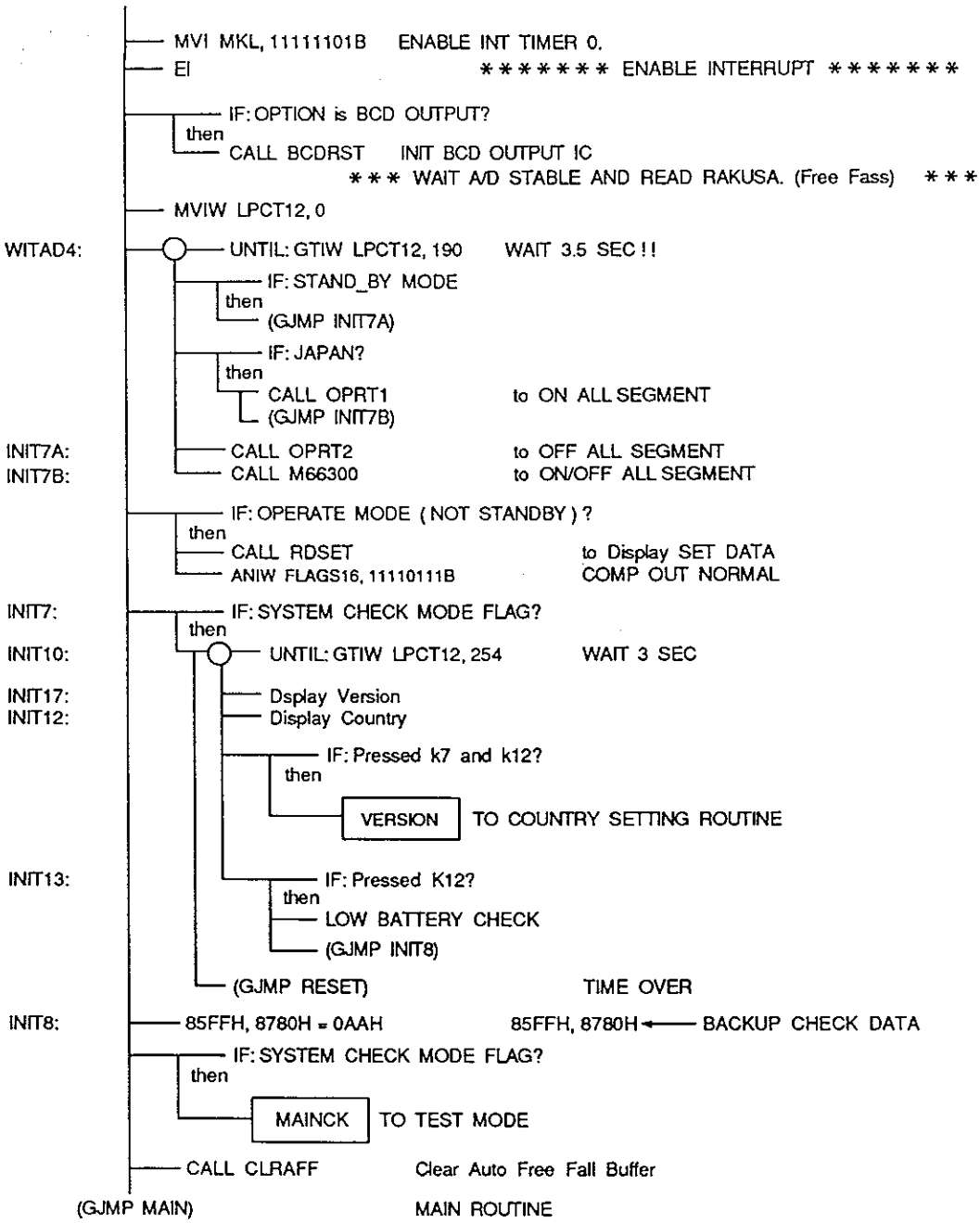
MVI MKL, 11111101B ENABLE INT TIMER 0.
EI ******* ENABLE INTERRUPT *******
IF: OPTION is BCD OUTPUT?
then
CALL BCDRST INIT BCD OUTPUT IC
*** WAIT A/D STABLE AND READ RAKUSA. (Free Fass) ***
MVIW LPCT12, 0
WITAD4:
UNTIL: GTIW LPCT12, 190 WAIT 3.5 SEC!!
IF: STAND_BY MODE
then
(GJMP INIT7A)
IF: JAPAN?
then
CALL OPRT1 to ON ALL SEGMENT
(GJMP INIT7B)
INIT7A:
CALL OPRT2 to OFF ALL SEGMENT
INIT7B:
CALL M66300 to ON/OFF ALL SEGMENT
IF: OPERATE MODE (NOT STANDBY) ?
then
CALL RDSET to Display SET DATA
ANIW FLAGS16, 11110111B COMP OUT NORMAL
INIT7:
IF: SYSTEM CHECK MODE FLAG?
then
INIT10:
UNTIL: GTIW LPCT12, 254 WAIT 3 SEC
INIT17:
Dsplay Version
INIT12:
Display Country
IF: Pressed k7 and k12?
then
VERSION TO COUNTRY SETTING ROUTINE
INIT13:
IF: Pressed K12?
then
LOW BATTERY CHECK
(GJMP INIT8)
(GJMP RESET) TIME OVER
INIT8:
85FFH, 8780H = 0AAH 85FFH, 8780H ← BACKUP CHECK DATA
IF: SYSTEM CHECK MODE FLAG?
then
MAINCK TO TEST MODE
CALL CLRAFF Clear Auto Free Fall Buffer
(GJMP MAIN) MAIN ROUTINE

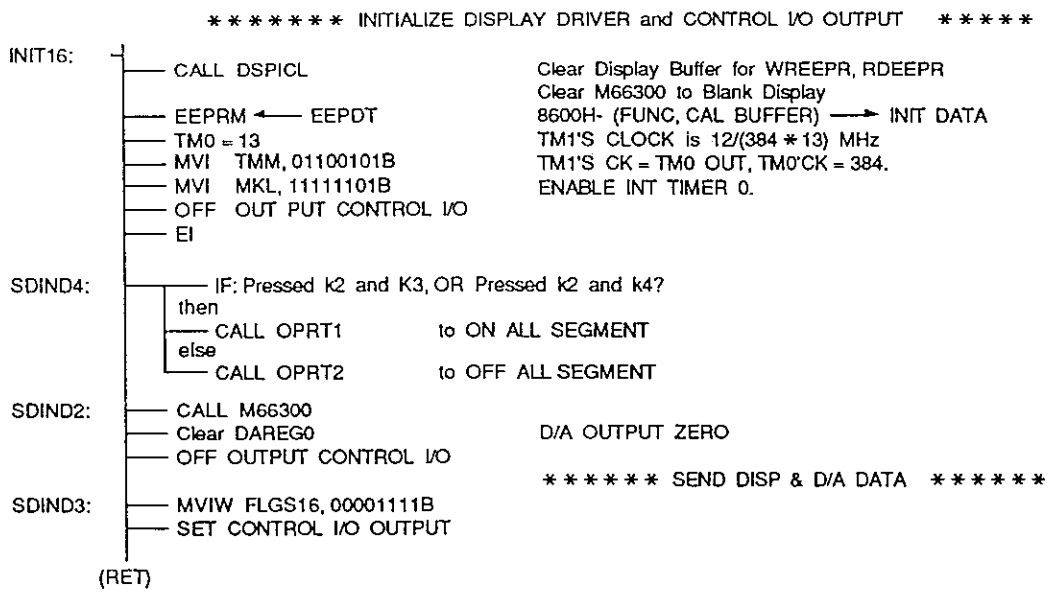
******* INITIALIZE DISPLAY DRIVER and CONTROL I/O OUTPUT *****
INIT16:
CALL DSPICL
Clear Display Buffer for WREEPR, RDEEPR
Clear M66300 to Blank Display
EEPRM ← EEPDT
8600H- (FUNC, CAL BUFFER) → INIT DATA
TM0 = 13
TM1'S CLOCK is 12/(384 * 13) MHz
MVI TMM, 01100101B
TM1'S CK = TM0 OUT, TM0'CK = 384.
MVI MKL, 11111101B
ENABLE INT TIMER 0.
OFF OUT PUT CONTROL I/O
EI
SDIND4:
IF: Pressed k2 and K3, OR Pressed k2 and k4?
then
CALL OPRT1
to ON ALL SEGMENT
else
CALL OPRT2
to OFF ALL SEGMENT
SDIND2:
CALL M66300
Clear DAREG0
D/A OUTPUT ZERO
OFF OUTPUT CONTROL I/O
****** SEND DISP & D/A DATA ******
SDIND3:
MVIW FLGS16, 00001111B
SET CONTROL I/O OUTPUT
(RET)

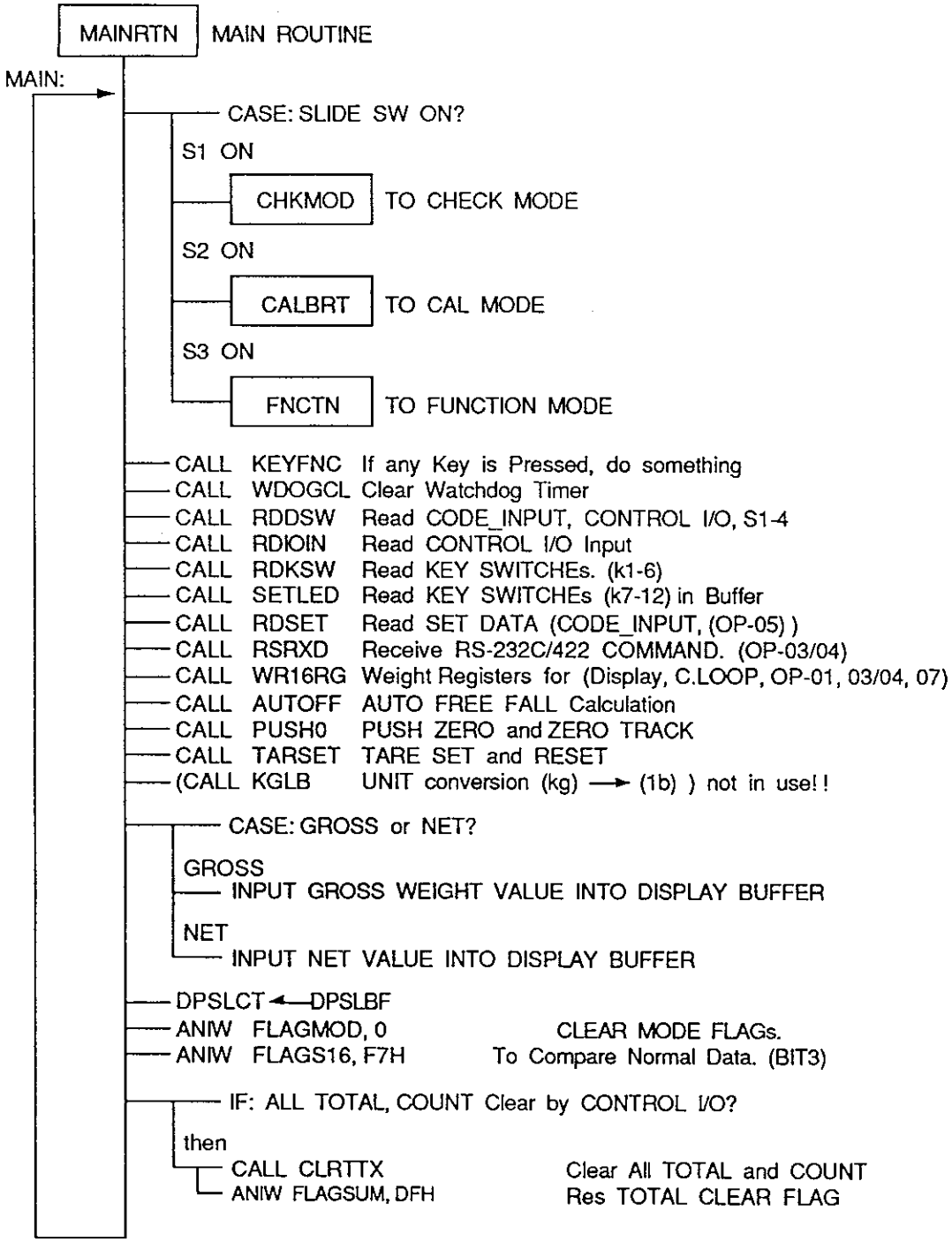
MAINRTN
MAIN ROUTINE
MAIN:
CASE: SLIDE SW ON?
S1 ON
CHKMOD
TO CHECK MODE
S2 ON
CALBRT
TO CAL MODE
S3 ON
FNCTN
TO FUNCTION MODE
CALL KEYFNC If any Key is Pressed, do something
CALL WDOGCL Clear Watchdog Timer
CALL RDDSW Read CODE_INPUT, CONTROL I/O, S1-4
CALL RDIOIN Read CONTROL I/O Input
CALL RDKSW Read KEY SWITCHEs. (k1-6)
CALL SETLED Read KEY SWITCHEs (k7-12) in Buffer
CALL RDSET Read SET DATA (CODE_INPUT, (OP-05))
CALL RSRXD Receive RS-232C/422 COMMAND. (OP-03/04)
CALL WR16RG Weight Registers for (Display, C.LOOP, OP-01, 03/04, 07)
CALL AUTOFF AUTO FREE FALL Calculation
CALL PUSH0 PUSH ZERO and ZERO TRACK
CALL TARSET TARE SET and RESET
(CALL KGLB UNIT conversion (kg) ⟶ (1b)) not in use!!
CASE: GROSS or NET?
GROSS
INPUT GROSS WEIGHT VALUE INTO DISPLAY BUFFER
NET
INPUT NET VALUE INTO DISPLAY BUFFER
DPSLCT ⟵ DPSLBF
ANIW FLAGMOD, 0
CLEAR MODE FLAGs.
ANIW FLAGS16, F7H
To Compare Normal Data. (BIT3)
IF: ALL TOTAL, COUNT Clear by CONTROL I/O?
then
CALL CLRTTX
Clear All TOTAL and COUNT
ANIW FLAGSUM, DFH
Res TOTAL CLEAR FLAG

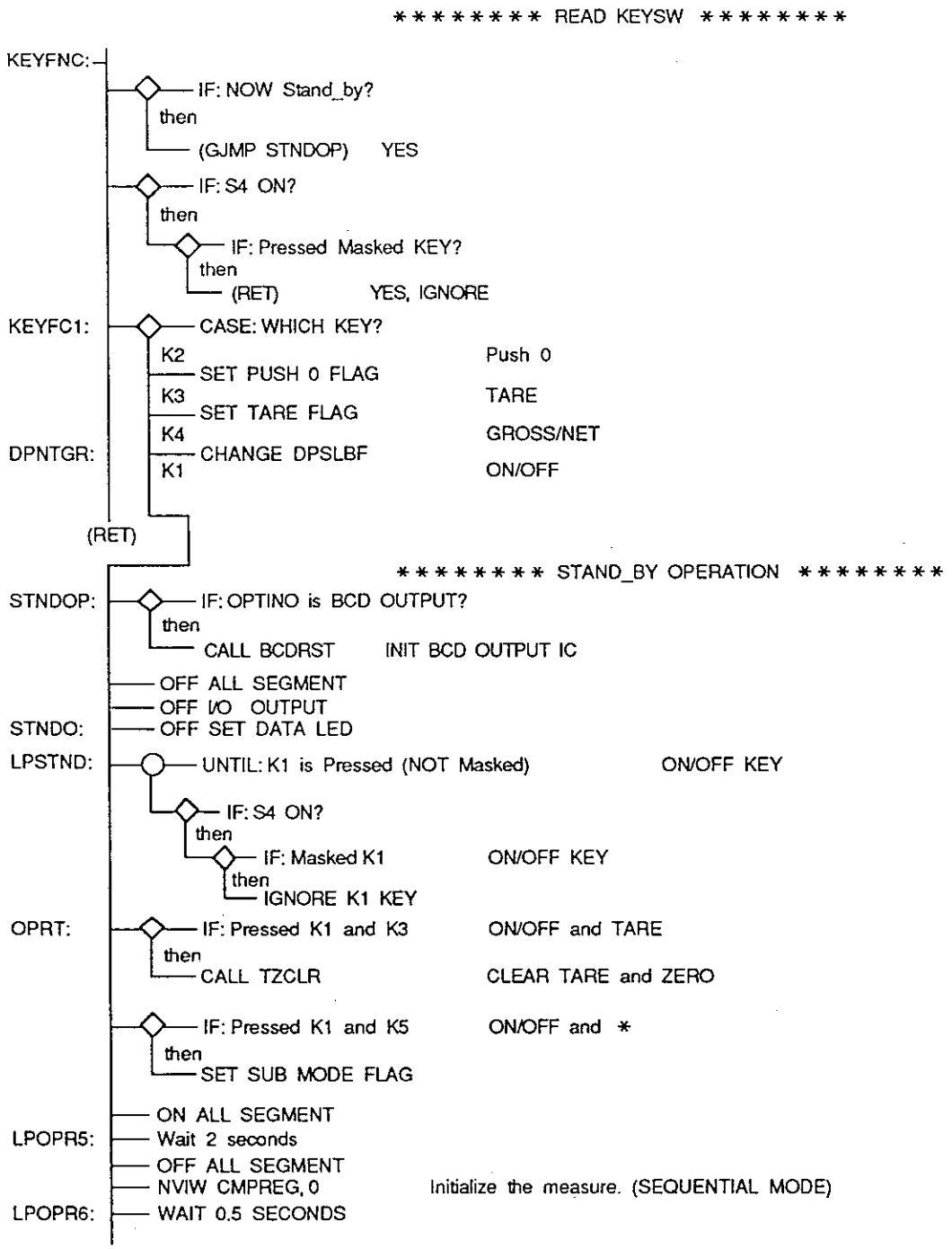
******** READ KEYSW ********
KEYFNC:
IF: NOW Stand_by?
then
(GJMP STNDOP) YES
IF: S4 ON?
then
IF: Pressed Masked KEY?
then
(RET) YES, IGNORE
KEYFC1:
CASE: WHICH KEY?
K2
SET PUSH 0 FLAG
Push 0
K3
SET TARE FLAG
TARE
K4
CHANGE DPSLBF
GROSS/NET
DPNTGR:
K1
ON/OFF
(RET)
******** STAND_BY OPERATION ********
STNDOP:
IF: OPTINO is BCD OUTPUT?
then
CALL BCDRST INIT BCD OUTPUT IC
OFF ALL SEGMENT
OFF I/O OUTPUT
STNDO:
OFF SET DATA LED
LPSTND:
UNTIL: K1 is Pressed (NOT Masked) ON/OFF KEY
IF: S4 ON?
then
IF: Masked K1 ON/OFF KEY
then
IGNORE K1 KEY
OPRT:
IF: Pressed K1 and K3 ON/OFF and TARE
then
CALL TZCLR CLEAR TARE and ZERO
IF: Pressed K1 and K5 ON/OFF and *
then
SET SUB MODE FLAG
ON ALL SEGMENT
LPOPR5:
Wait 2 seconds
OFF ALL SEGMENT
NVIW CMPREG, 0 Initialize the measure. (SEQUENTIAL MODE)
LPOPR6:
WAIT 0.5 SECONDS

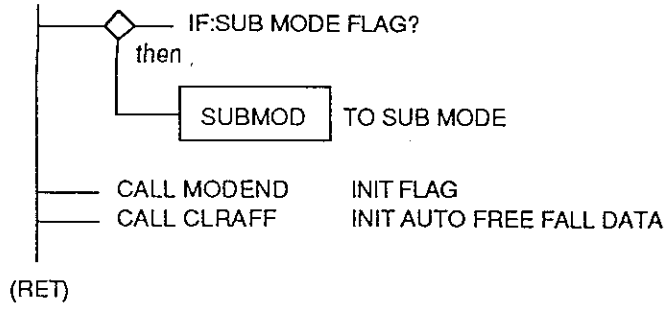
IF:SUB MODE FLAG?
then
SUBMOD
TO SUB MODE
CALL MODEND
INIT FLAG
CALL CLRAFF
INIT AUTO FREE FALL DATA
(RET)

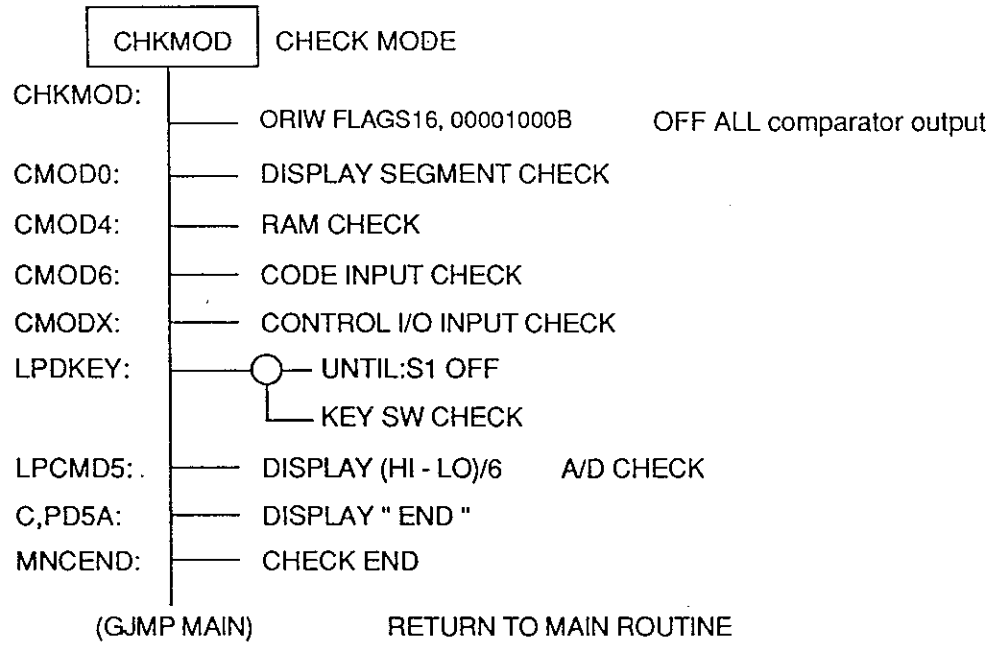
CHKMOD
CHECK MODE
CHKMOD:
ORIW FLAGS16, 00001000B
OFF ALL comparator output
CMOD0:
DISPLAY SEGMENT CHECK
CMOD4:
RAM CHECK
CMOD6:
CODE INPUT CHECK
CMODX:
CONTROL I/O INPUT CHECK
LPDKEY:
UNTIL:S1 OFF
KEY SW CHECK
LPCMD5:
DISPLAY (HI - LO)/6
A/D CHECK
C,PD5A:
DISPLAY " END "
MNCEND:
CHECK END
(GJMP MAIN)
RETURN TO MAIN ROUTINE

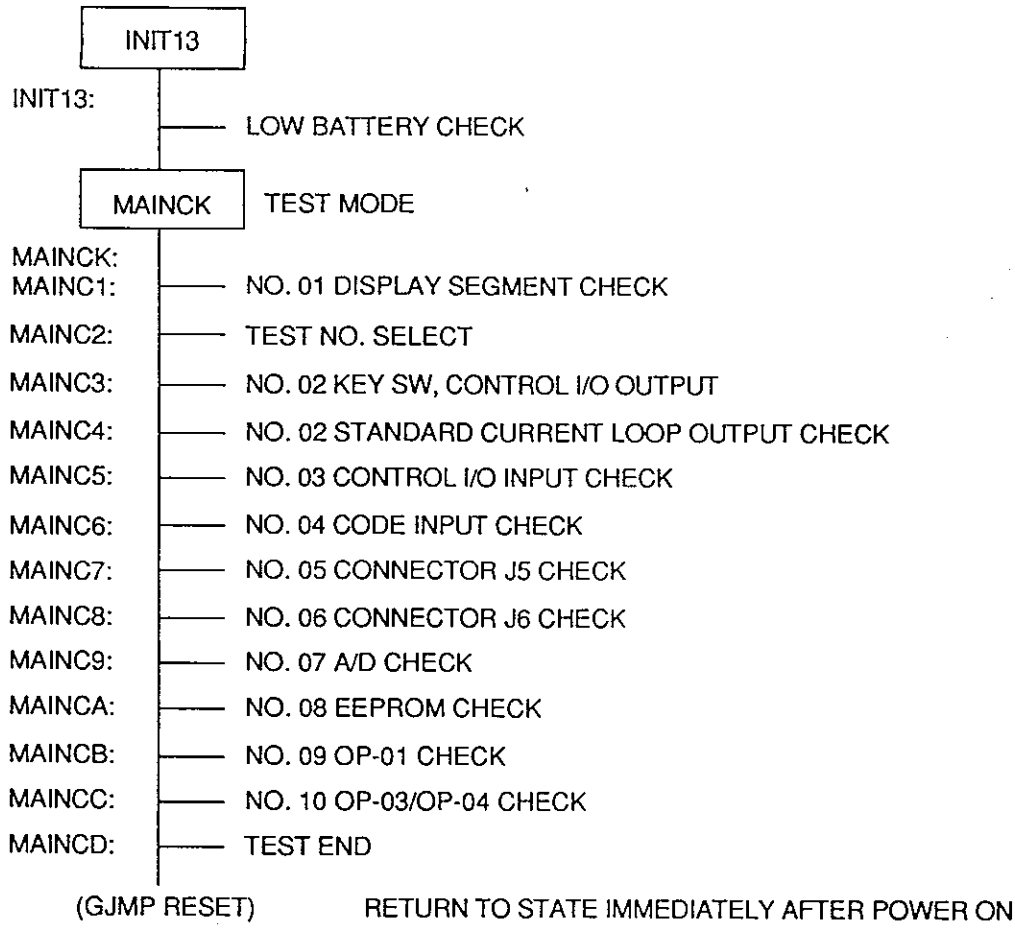
INIT13
INIT13:
LOW BATTERY CHECK
MAINCK
TEST MODE
MAINCK:
MAINC1:
NO. 01 DISPLAY SEGMENT CHECK
MAINC2:
TEST NO. SELECT
MAINC3:
NO. 02 KEY SW, CONTROL I/O OUTPUT
MAINC4:
NO. 02 STANDARD CURRENT LOOP OUTPUT CHECK
MAINC5:
NO. 03 CONTROL I/O INPUT CHECK
MAINC6:
NO. 04 CODE INPUT CHECK
MAINC7:
NO. 05 CONNECTOR J5 CHECK
MAINC8:
NO. 06 CONNECTOR J6 CHECK
MAINC9:
NO. 07 A/D CHECK
MAINCA:
NO. 08 EEPROM CHECK
MAINCB:
NO. 09 OP-01 CHECK
MAINCC:
NO. 10 OP-03/OP-04 CHECK
MAINCD:
TEST END
(GJMP RESET)
RETURN TO STATE IMMEDIATELY AFTER POWER ON

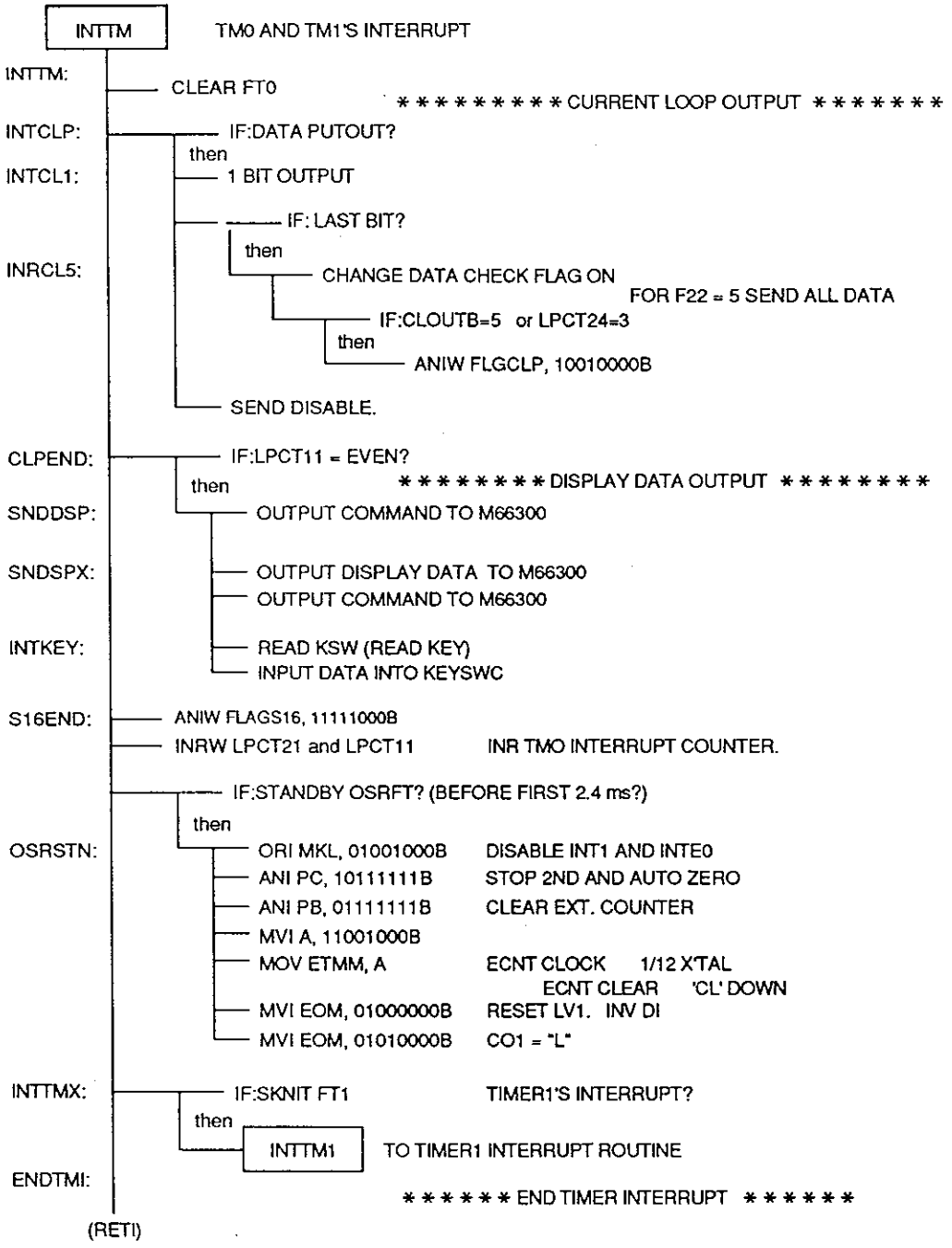
INTTM
TM0 AND TM1'S INTERRUPT
INTTM:
CLEAR FT0
* * * * * * * * * CURRENT LOOP OUTPUT * * * * * * *
INTCLP:
IF:DATA PUTOUT?
then
INTCL1:
1 BIT OUTPUT
IF: LAST BIT?
then
INRCL5:
CHANGE DATA CHECK FLAG ON
FOR F22 = 5 SEND ALL DATA
IF:CLOUTB=5 or LPCT24=3
then
ANIW FLGCLP, 10010000B
SEND DISABLE.
CLPEND:
IF:LPCT11 = EVEN?
then
* * * * * * * * DISPLAY DATA OUTPUT * * * * * * * *
SNDDSP:
OUTPUT COMMAND TO M66300
SNDSPX:
OUTPUT DISPLAY DATA TO M66300
OUTPUT COMMAND TO M66300
INTKEY:
READ KSW (READ KEY)
INPUT DATA INTO KEYSWC
S16END:
ANIW FLAGS16, 11111000B
INRW LPCT21 and LPCT11
INR TMO INTERRUPT COUNTER.
IF:STANDBY OSRFT? (BEFORE FIRST 2.4 ms?)
then
OSRSTN:
ORI MKL, 01001000B
DISABLE INT1 AND INTE0
ANI PC, 10111111B
STOP 2ND AND AUTO ZERO
ANI PB, 01111111B
CLEAR EXT. COUNTER
MVI A, 11001000B
MOV ETMM, A
ECNT CLOCK 1/12 X'TAL
ECNT CLEAR 'CL' DOWN
MVI EOM, 01000000B
RESET LV1. INV DI
MVI EOM, 01010000B
CO1 = "L"
INTTMX:
IF:SKNIT FT1
TIMER1'S INTERRUPT?
then
INTTM1
TO TIMER1 INTERRUPT ROUTINE
ENDTMI:
* * * * * * END TIMER INTERRUPT * * * * * *
(RETI)

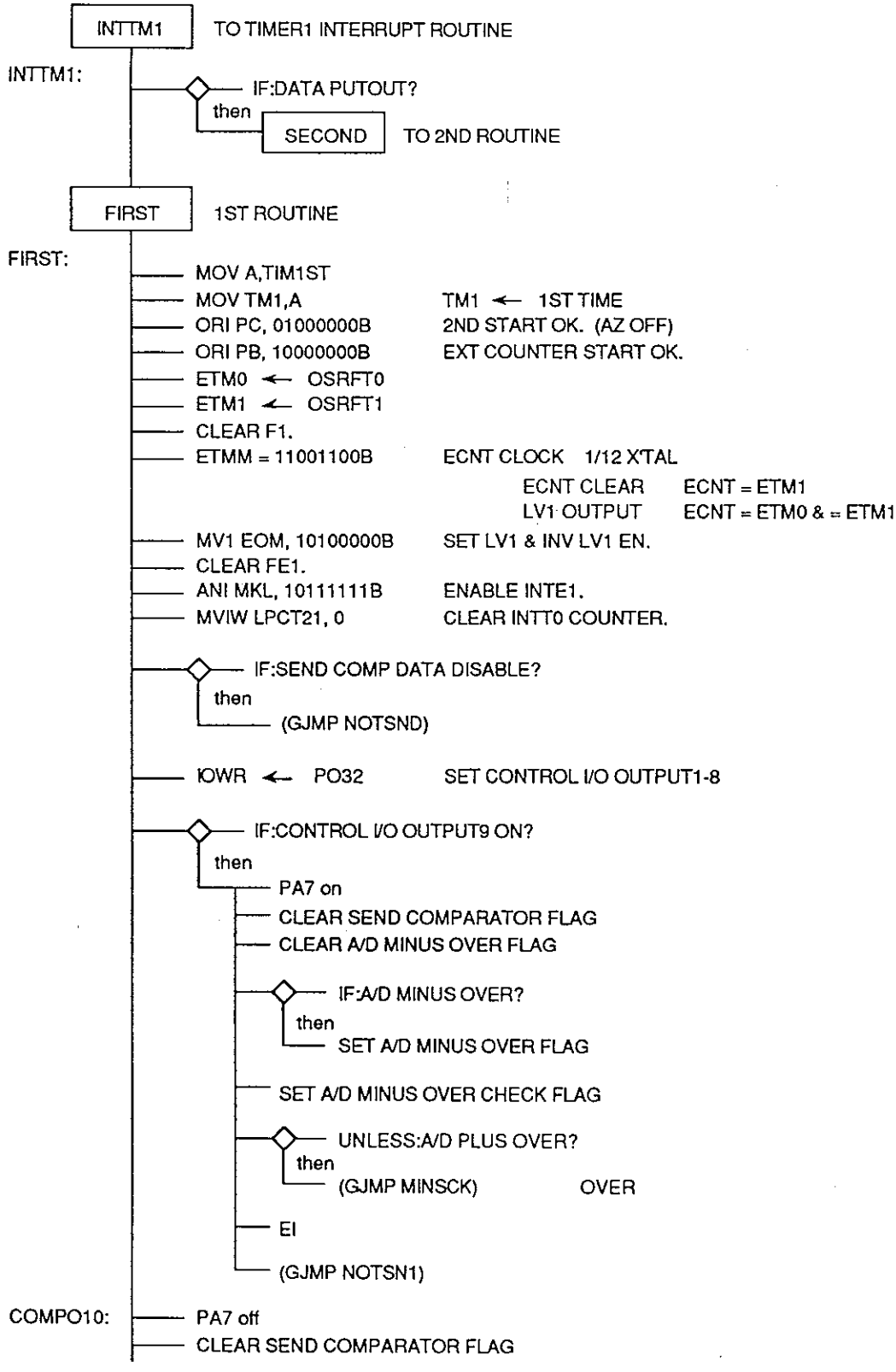
INTTM1
TO TIMER1 INTERRUPT ROUTINE
INTTM1:
IF:DATA PUTOUT?
then
SECOND
TO 2ND ROUTINE
FIRST
1ST ROUTINE
FIRST:
MOV A,TIM1ST
MOV TM1,A
TM1 ← 1ST TIME
ORI PC, 01000000B
2ND START OK. (AZ OFF)
ORI PB, 10000000B
EXT COUNTER START OK.
ETM0 ← OSRFT0
ETM1 ← OSRFT1
CLEAR F1.
ETMM = 11001100B
ECNT CLOCK 1/12 XTAL
ECNT CLEAR ECNT = ETM1
LV1 OUTPUT ECNT = ETM0 & = ETM1
MV1 EOM, 10100000B
SET LV1 & INV LV1 EN.
CLEAR FE1.
ANI MKL, 10111111B
ENABLE INTE1.
MVIW LPCT21, 0
CLEAR INTT0 COUNTER.
IF:SEND COMP DATA DISABLE?
then
(GJMP NOTSND)
IOWR ← PO32
SET CONTROL I/O OUTPUT1-8
IF:CONTROL I/O OUTPUT9 ON?
then
PA7 on
CLEAR SEND COMPARATOR FLAG
CLEAR A/D MINUS OVER FLAG
IF:A/D MINUS OVER?
then
SET A/D MINUS OVER FLAG
SET A/D MINUS OVER CHECK FLAG
UNLESS:A/D PLUS OVER?
then
(GJMP MINSCK)
OVER
EI
(GJMP NOTSN1)
COMPO10:
PA7 off
CLEAR SEND COMPARATOR FLAG

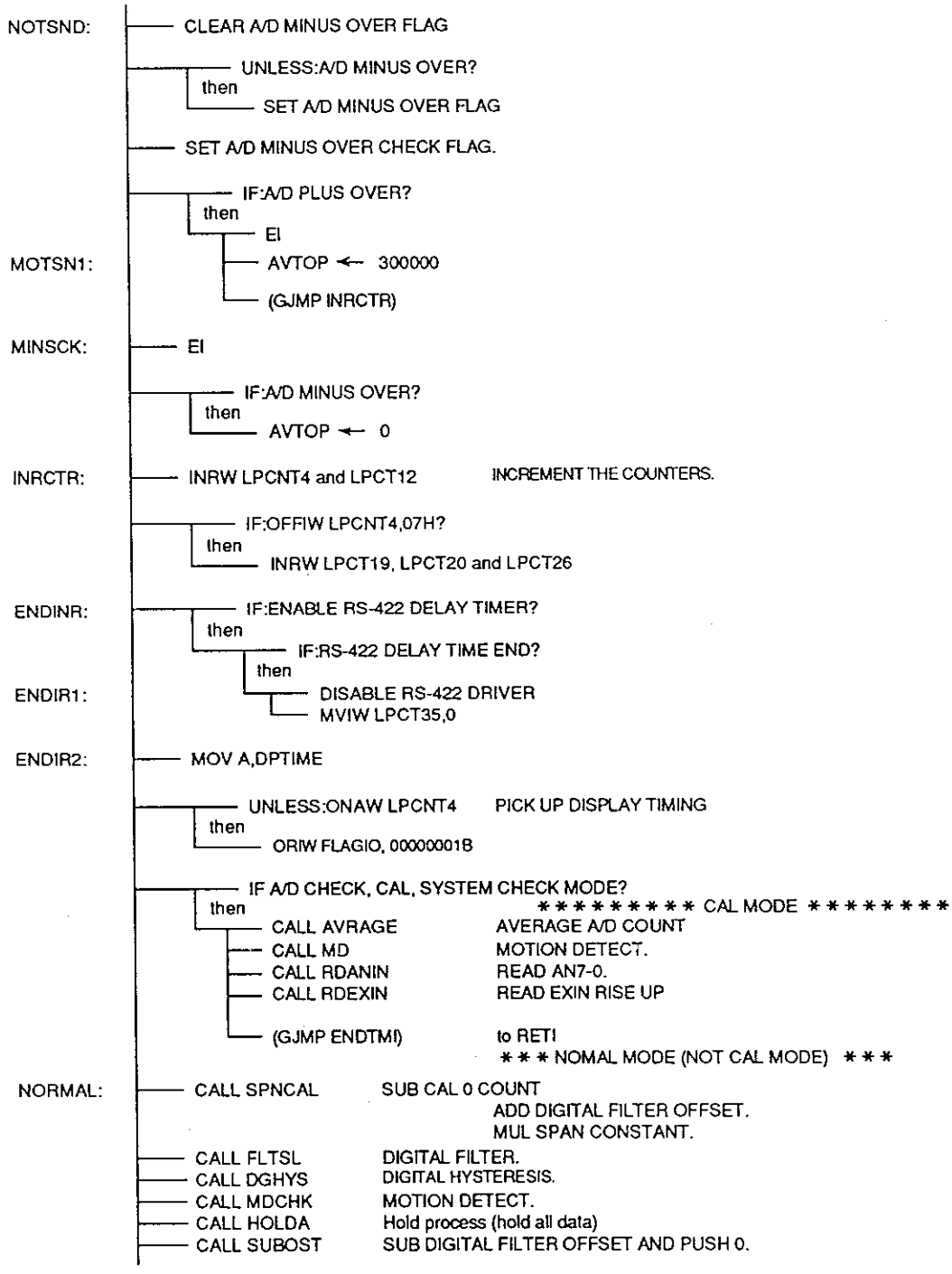
NOTSND:
CLEAR A/D MINUS OVER FLAG
UNLESS:A/D MINUS OVER?
then
SET A/D MINUS OVER FLAG
SET A/D MINUS OVER CHECK FLAG.
IF:A/D PLUS OVER?
then
EI
MOTSN1:
AVTOP ← 300000
(GJMP INRCTR)
MINSCK:
EI
IF:A/D MINUS OVER?
then
AVTOP ← 0
INRCTR:
INRW LPCNT4 and LPCT12
INCREMENT THE COUNTERS.
IF:OFFIW LPCNT4,07H?
then
INRW LPCT19, LPCT20 and LPCT26
ENDINR:
IF:ENABLE RS-422 DELAY TIMER?
then
IF:RS-422 DELAY TIME END?
then
ENDIR1:
DISABLE RS-422 DRIVER
MVIW LPCT35,0
ENDIR2:
MOV A,DPTIME
UNLESS:ONAW LPCNT4
PICK UP DISPLAY TIMING
then
ORIW FLAGIO, 00000001B
IF A/D CHECK, CAL, SYSTEM CHECK MODE?
then
********* CAL MODE *********
CALL AVRAGE
AVERAGE A/D COUNT
CALL MD
MOTION DETECT.
CALL RDANIN
READ AN7-0.
CALL RDEXIN
READ EXIN RISE UP
(GJMP ENDTMI)
to RETI
*** NOMAL MODE (NOT CAL MODE) ***
NORMAL:
CALL SPNCAL
SUB CAL 0 COUNT
ADD DIGITAL FILTER OFFSET.
MUL SPAN CONSTANT.
CALL FLTSL
DIGITAL FILTER.
CALL DGHYS
DIGITAL HYSTERESIS.
CALL MDCHK
MOTION DETECT.
CALL HOLDA
Hold process (hold all data)
CALL SUBOST
SUB DIGITAL FILTER OFFSET AND PUSH 0.

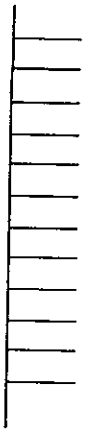

CALL SUBP0	MINS CAP OVER CHECK AND SUB PUSH ZERO.
CALL ZRTRCK	ZERO TRACKING.
CALL GRNTIN	(INTNET) ← (INTGRS) - (INTTAR)
CALL DIV3	(PGRS) ← (INTGRS) / 3
CALL DIVSON	(GROSS) ← (PGRS) * (MINDIV)
CALL GRSNET	(NET) ← (GROSS) - (TARE)
CALL COMP	A/D OVER, NEAR ZERO, +- OVER, FLOW
CALL HOLDB	Hold process (expect the comparator)
CALL SIEVRY	SERIAL INTERFACE.
CALL RDANIN	READ AN7-0.
CALL RDEXIN	READ EXIN RISE UP.
CALL RDSWIN	READ DIGISW (,KSW ...NEXT TIME !)

(GJMP ENDTMI) to RETI

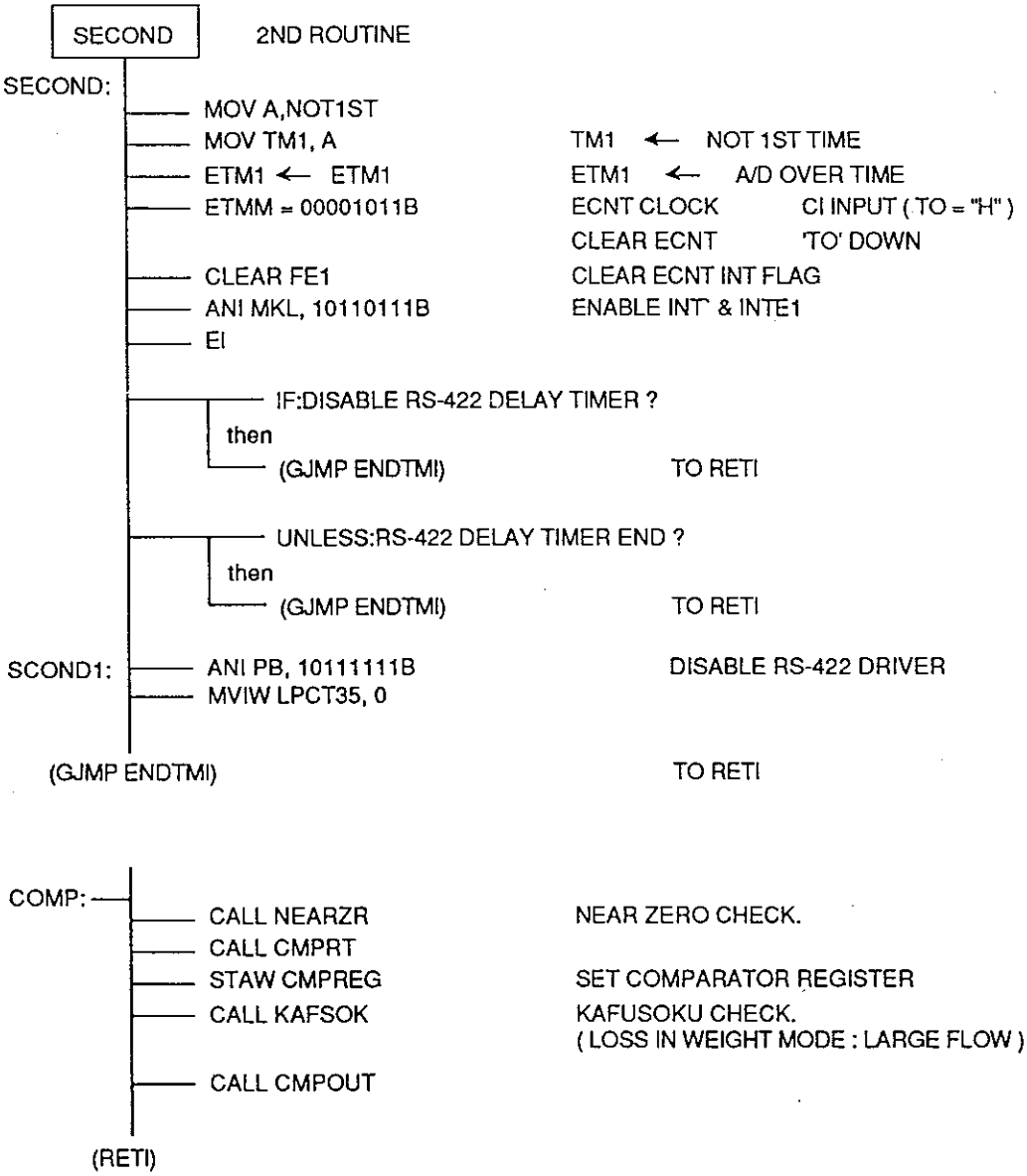
SECOND
2ND ROUTINE
SECOND:
MOV A,NOT1ST
MOV TM1, A
TM1 ← NOT 1ST TIME
ETM1 ← ETM1
ETM1 ← A/D OVER TIME
ETMM = 00001011B
ECNT CLOCK CI INPUT (TO = "H")
CLEAR ECNT 'TO' DOWN
CLEAR FE1
CLEAR ECNT INT FLAG
ANI MKL, 10110111B
ENABLE INT & INTE1
EI
IF:DISABLE RS-422 DELAY TIMER ?
then
(GJMP ENDTMI)
TO RETI
UNLESS:RS-422 DELAY TIMER END ?
then
(GJMP ENDTMI)
TO RETI
SCOND1:
ANI PB, 10111111B
DISABLE RS-422 DRIVER
MVIW LPCT35, 0
(GJMP ENDTMI)
TO RETI

COMP:
CALL NEARZR
NEAR ZERO CHECK.
CALL CMPRT
STAW CMPREG
SET COMPARATOR REGISTER
CALL KAFSOK
KAFUSOKU CHECK.
(LOSS IN WEIGHT MODE : LARGE FLOW)
CALL CMPOUT
(RETI)

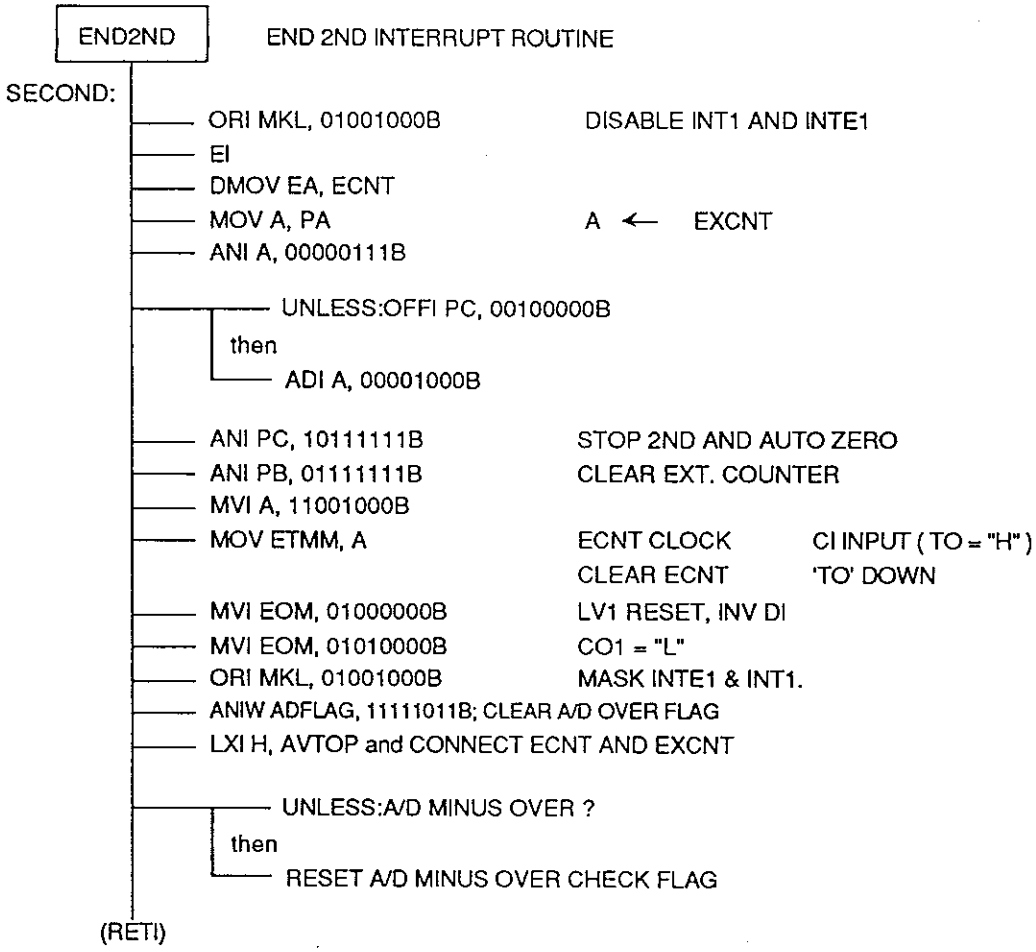
END2ND
END 2ND INTERRUPT ROUTINE
SECOND:
ORI MKL, 01001000B
DISABLE INT1 AND INTE1
EI
DMOV EA, ECNT
MOV A, PA
A ← EXCNT
ANI A, 00000111B
UNLESS:OFFI PC, 00100000B
then
ADI A, 00001000B
ANI PC, 10111111B
STOP 2ND AND AUTO ZERO
ANI PB, 01111111B
CLEAR EXT. COUNTER
MVI A, 11001000B
MOV ETMM, A
ECNT CLOCK
CI INPUT (TO = "H")
CLEAR ECNT
'TO' DOWN
MVI EOM, 01000000B
LV1 RESET, INV DI
MVI EOM, 01010000B
CO1 = "L"
ORI MKL, 01001000B
MASK INTE1 & INT1.
ANIW ADFLAG, 11111011B; CLEAR A/D OVER FLAG
LXI H, AVTOP and CONNECT ECNT AND EXCNT
UNLESS:A/D MINUS OVER ?
then
RESET A/D MINUS OVER CHECK FLAG
(RETI)

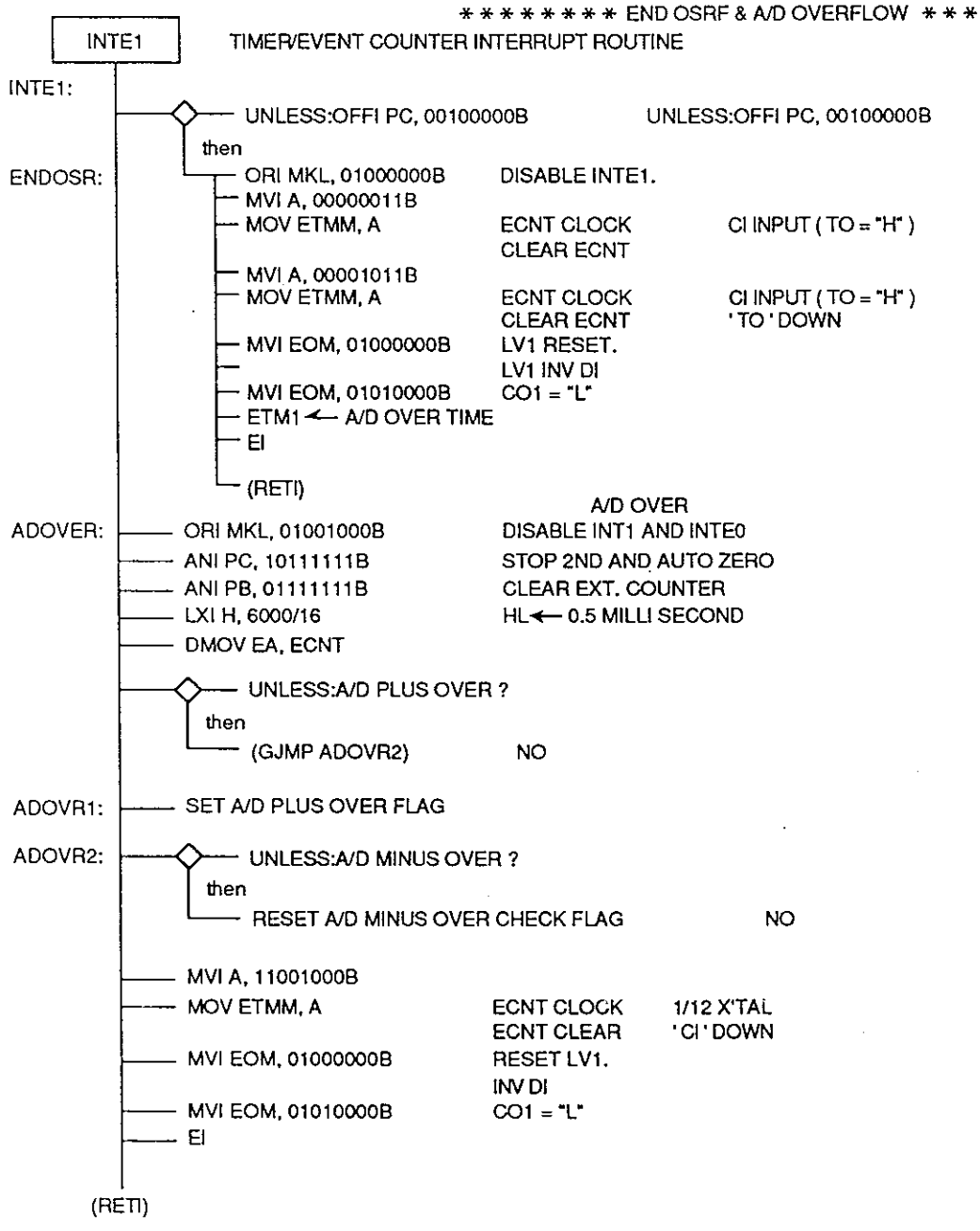
******** END OSRF & A/D OVERFLOW ***
INTE1
TIMER/EVENT COUNTER INTERRUPT ROUTINE
INTE1:
UNLESS:OFFI PC, 00100000B
UNLESS:OFFI PC, 00100000B
then
ENDOSR:
ORI MKL, 01000000B
DISABLE INTE1.
MVI A, 00000011B
MOV ETMM, A
ECNT CLOCK
CLEAR ECNT
CI INPUT (TO = "H")
MVI A, 00001011B
MOV ETMM, A
ECNT CLOCK
CLEAR ECNT
CI INPUT (TO = "H")
'TO ' DOWN
MVI EOM, 01000000B
LV1 RESET.
LV1 INV DI
MVI EOM, 01010000B
CO1 = "L"
ETM1 ← A/D OVER TIME
EI
(RETI)
A/D OVER
ADOVER:
ORI MKL, 01001000B
DISABLE INT1 AND INTE0
ANI PC, 10111111B
STOP 2ND AND AUTO ZERO
ANI PB, 01111111B
CLEAR EXT. COUNTER
LXI H, 6000/16
HL← 0.5 MILLI SECOND
DMOV EA, ECNT
UNLESS:A/D PLUS OVER ?
then
(GJMP ADOVR2)
NO
ADOVR1:
SET A/D PLUS OVER FLAG
ADOVR2:
UNLESS:A/D MINUS OVER ?
then
RESET A/D MINUS OVER CHECK FLAG
NO
MVI A, 11001000B
MOV ETMM, A
ECNT CLOCK
ECNT CLEAR
1/12 X'TAL
'CI ' DOWN
MVI EOM, 01000000B
RESET LV1.
INV DI
MVI EOM, 01010000B
CO1 = "L"
EI
(RETI)

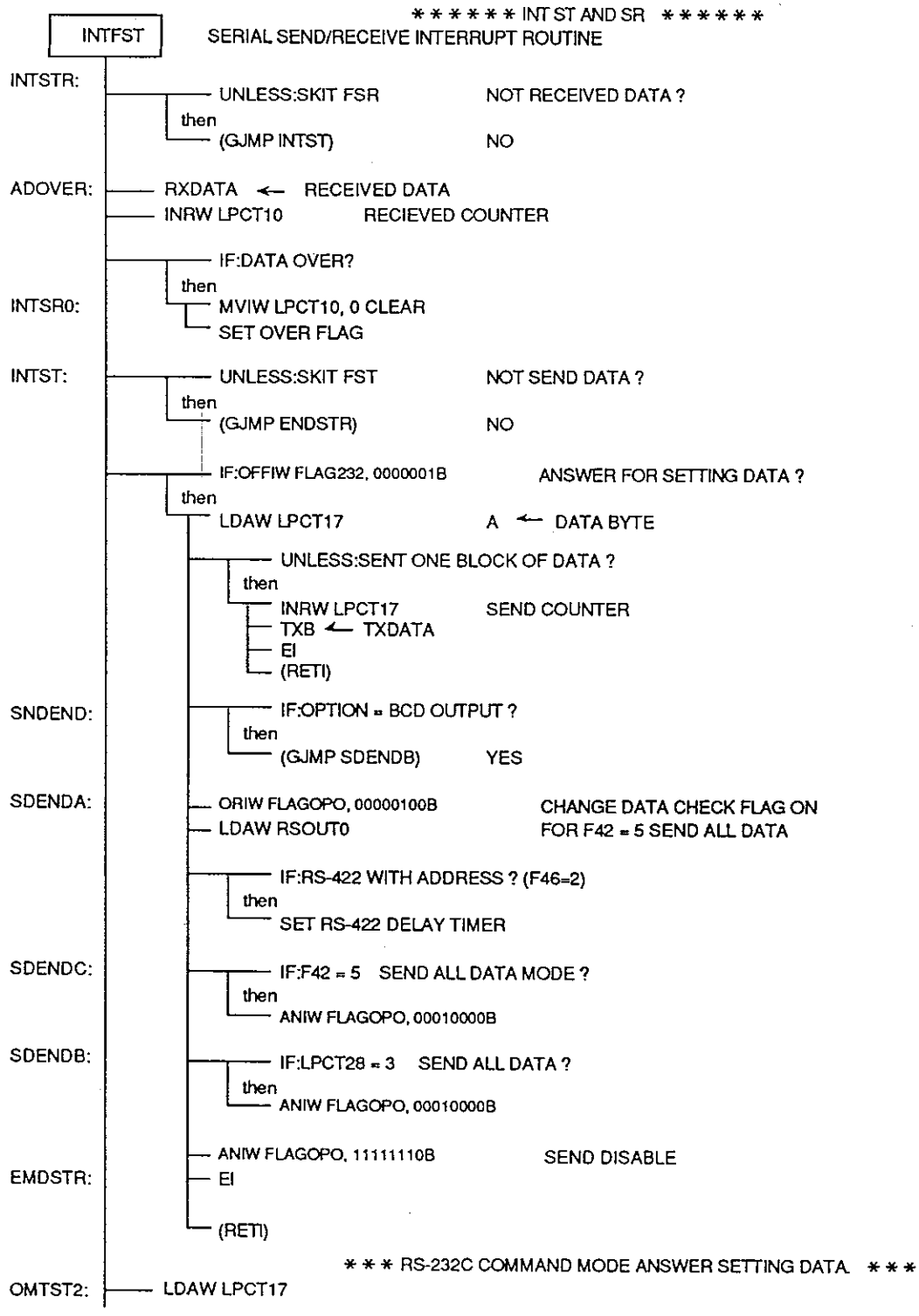
****** INT ST AND SR ******
INTFST
SERIAL SEND/RECEIVE INTERRUPT ROUTINE
INTSTR:
UNLESS:SKIT FSR
NOT RECEIVED DATA ?
then
(GJMP INTST)
NO
ADOVER:
RXDATA ← RECEIVED DATA
INRW LPCT10
RECIEVED COUNTER
IF:DATA OVER?
then
INTSR0:
MVIW LPCT10, 0 CLEAR
SET OVER FLAG
INTST:
UNLESS:SKIT FST
NOT SEND DATA ?
then
(GJMP ENDSTR)
NO
IF:OFFIW FLAG232, 0000001B
ANSWER FOR SETTING DATA ?
then
LDAW LPCT17
A ← DATA BYTE
UNLESS:SENT ONE BLOCK OF DATA ?
then
INRW LPCT17
SEND COUNTER
TXB ← TXDATA
EI
(RETI)
SNDEND:
IF:OPTION = BCD OUTPUT ?
then
(GJMP SDENDB)
YES
SDENDA:
ORIW FLAGOPO, 00000100B
CHANGE DATA CHECK FLAG ON
LDAW RSOUT0
FOR F42 = 5 SEND ALL DATA
IF:RS-422 WITH ADDRESS ? (F46=2)
then
SET RS-422 DELAY TIMER
SDENDC:
IF:F42 = 5 SEND ALL DATA MODE ?
then
ANIW FLAGOPO, 00010000B
SDENDB:
IF:LPCT28 = 3 SEND ALL DATA ?
then
ANIW FLAGOPO, 00010000B
ANIW FLAGOPO, 11111110B
SEND DISABLE
EMDSTR:
EI
(RETI)
*** RS-232C COMMAND MODE ANSWER SETTING DATA ***
OMTST2:
LDAW LPCT17

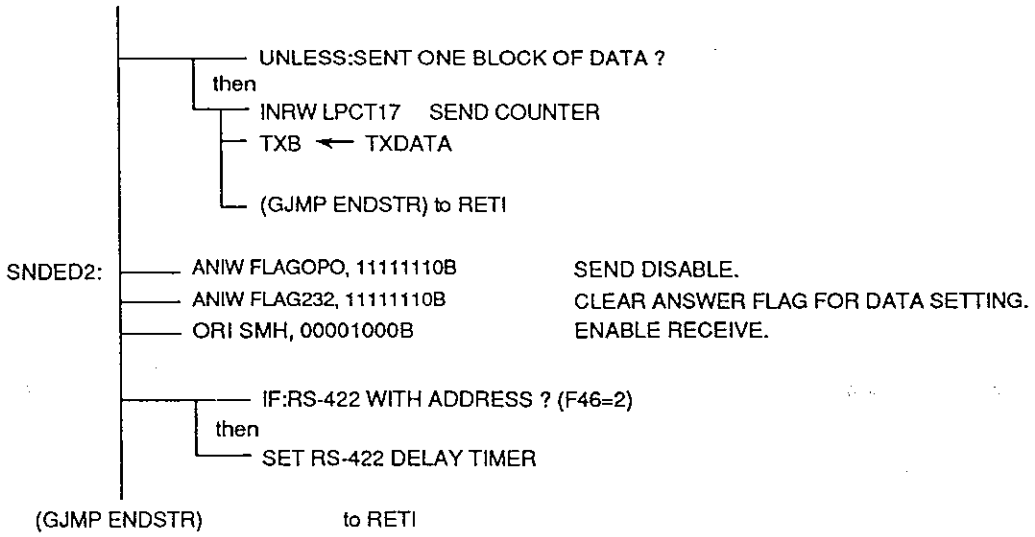
UNLESS:SENT ONE BLOCK OF DATA ?
then
INRW LPCT17 SEND COUNTER
TXB ← TXDATA
(GJMP ENDSTR) to RETI
SNDED2:
ANIW FLAGOPO, 11111110B
SEND DISABLE.
ANIW FLAG232, 11111110B
CLEAR ANSWER FLAG FOR DATA SETTING.
ORI SMH, 00001000B
ENABLE RECEIVE.
IF:RS-422 WITH ADDRESS ? (F46=2)
then
SET RS-422 DELAY TIMER
(GJMP ENDSTR)
to RETI

There are two kinds of check software which are incorporated in the standard ROM.

(1) Turning on the slide switch S1 with power on causes the system to enter the Check mode. In this mode, key and external inputs are checked.

(2) With the ON/OFF and " * " keys held down, turning on the power causes the system to enter the Test mode. When the ENTER key is pressed (within 2 seconds) after version and country displays, the system makes a check by items, following a display segment check. In this mode, it is possible to make individual checks on key input, control I/O input, current loop input, code input, connector J5/J6, A/D, EEPROM, OP-01, and OP-03/OP-04.

1. Check Mode (Refer to Section E in the instruction manual.)

In the Check mode, only inputs are checked with all outputs turned off. Therefore, the user can make checks during operation.

[Entering the Check Mode]

Turn on the power switch on the rear panel. When the display is off, press the ON/OFF key to turn it on.

Remove the blind cover on the lower right of the front panel and turn on the slide switch S1. This causes the system to enter the Check mode. Make sure that all the displays are turned on. Since in the Check mode inputs are checked by displaying the status, no check can be made unless the display is normal. When it is doubtful whether the display is normal, make a segment check in the Test mode beforehand.

<<RAM Check>>

When "CHEC rA" is displayed on the upper right, following all displays on, a RAM R/W check is started. Write 55H and AAH in 8000H - 87FFH and read. If it is OK, "GOOD" will be displayed on the lower right.

<<Code Input>>

When the ENTER key is pressed, "CHEC Cd" is displayed on the upper right and the BCD code input is displayed in decimal on the lower right.

<<Control I/O Input>>

When the ENTER key is pressed, "CHEC io" is displayed on the upper right and the status of control I/O input is displayed in "oooooo". The left digit of the display indicates whether an option is attached. It goes "1" when the OP-03 and OP-04 boards are connected and "0" otherwise.

The remaining 6 digits correspond to inputs 1 to 6. When an input is on, the digit goes "1".

Options are checked only at power on.

<<Key Switches>>

When the ENTER key is pressed, "Loooooo" is displayed on the upper right LEDs and "roooooo" on the lower right LEDs of the front panel. The upper digits correspond to the "ON/OFF" to "*" keys and the lower to "CODE", "<", ">", "+", "-", and "ENTER" keys. Pressing a key causes the digit to go "1".

The right 6 keys ("CODE", "<", ">", "+", "-", "ENTER") are dynamically read by using display digit select signals.

There is something wrong with a data line in cases where pressing any keys shows no reactions or where pressing only one key causes all 6 digits to go "1".

If the system enters the Check mode even with the slide switch S1 off, a contact failure may occur in the cable connected between J2 of the main board and J3 of the display board. The slide switch is turned on when open.

<<A/D>>

When the S1 is pressed, "CHEC Ad" is displayed on the upper right and the internal count of the A/D converter is simply averaged and displayed on the lower right, and then returned to the normal condition. If unnecessary, pressing the "CODE" key returns the count to the normal condition.

2. Test Mode

The Test mode is not open to the user (not described in the instruction manual) and is used mainly for output check.

[Entering the Test Mode]

With the slide switches S1 through S4 off, turning on the power with the ON/OFF and**"keys held down causes the system to enter the Test mode. When the ENTER key is pressed (within 2 seconds) after version and country displays, the system makes a check by items, following low battery and display segment checks. If all the displays are turned on without entering the Test mode, it is conceivable that a failure occurs in the keys or switches or the keys has not been pressed properly.

<<Lower Battery Check>>

Check if proper data (AAH) has been written in the specified addresses (85FFH and 8780H). If illegal data has been written, "Lo bAtt" appears on the upper right. This message indicates that the lithium batteries or

RAM itself may be defective. If no error is detected, the system will go to the next check without display. The message "Lo bAtt" is sometimes not displayed, even if the power is turned on again after the message appeared because of battery failure. This is because the electric charge remains in the capacitor on the board to back up the RAM. Leave the power turned off for about one hour. However, when the ROM has been replaced with another version, the message "Lo bAtt" may appear even if no failure is detected in hardware.

Following the lower battery check, the check by items is started. The message "tESt" appears on the left in cases other than No. 01 and 02. Pressing the ENTER key starts checking. In cases other than the next No., as soon as the CODE key is pressed, followed by either one key of "ON/OFF" (K1) to "-" (K10), the corresponding check will be made. (No check can be made for No. 02.) When the ENTER key (K12) is pressed, the message "END" is displayed, returning to the state immediately after power on.

No. 01 <<Segment Check>>

After all the display tubes and LEDs displayed "0" to "9" and ".", "," is displayed on the left LED, while the right is blanked. "" is displayed on the left LED, "01 CHEC SEG" is displayed on the upper right LEDs, while the lower right is blanked, and the upper unit LED is also turned on. "▼" is displayed on the left LED, "01 CHEC SEG" is displayed on the upper right LEDs, while the lower right is blanked, and the lower unit LED is also turned on.

If the unnecessary segments are turned on or some segments are not turned on, an open or short circuit may have occurred. Check the segments from the display tubes or LEDs to the display drivers. When the ENTER key is pressed, the next test is started.

No. 02
<<Keyswitch, Control I/O Output, Standard Current Loop Output>>

<<Key Switches>>

"Soooo" is displayed on the left LEDs, "Looooo" on the upper right LEDs, and "roooooo" on the lower right LEDs.

When the slide switches are pressed, the left LEDs go "1". They correspond to S1 to S4. The upper right LEDs correspond to "ON/OFF" to "*" keys and the lower right to "CODE", "<", ">", "+", "-", and "ENTER" keys. Pressing the keys cause the LEDs to go "1". When the ENTER key is pressed, the next test is started.

The right 6 keys ("CODE", "<", ">", "+", "-", "ENTER") are dynamically read by using display digit select signals.

There is something wrong with a data line in cases where pressing any keys shows no reactions or where pressing only one key causes all 6 digits to go "1". The slide switch is turned on when open.

<<Control I/O Output>>

When the "ON/OFF" key (K1) to ">" key (K9) are pressed with the "-" key (K11) held down, the corresponding outputs 9 to 1 are output.

<<Standard Current Loop Output>>

When the "+" key (K10) is pressed with the "-" key (K11) held down, 1234567890ABCDEF<CR><LF> and <CR><LF> are output at intervals of 1.5 seconds. The baud rate is 2,400 baud.

No. 03 <<Control I/O Input>>

"03 CHEC io" is displayed on the upper right. Turn on control I/O outputs 9 to 1 one by one. At the same time, the input status "oooooo" is displayed on the lower right. The left digit of the display indicates whether an option is attached. It goes "1" when the OP-03 and OP-04 boards are connected and "0" otherwise. The remaining 6 digits correspond to inputs 1 to 6. When an input is on, the digit goes "1". Options are checked only at power on.

When the ENTER key is pressed, the next test is started.

No. 04 <<Code Input>>

"04 CHEC Cd" is displayed on the upper right and the BCD code input is displayed in decimal on the lower right.

When the ENTER key is pressed, the next test is started.

No. 05 <<Connector J5>>

"05 CHEC J5" is displayed on the upper right.

Connector J5 is used for OP-01, OP-03, and OP-04 boards. If there is no optional board, only the connector is checked. In this case, a special jig is needed.

"oooo" is displayed on the lower right. It corresponds to SW1 to SW4. When the jig switch is pressed, "1" is displayed.

When the ENTER key is pressed, the next test is started.

If "1" is not displayed, a patter disconnection may occur and if multiple numbers are displayed, solder bridging may occur.

PIN No.	1	2	3	4	5	6
Signal name	SW4 input	SW3 input	SW2 input	SW2 output	SW1 input	SW1 output

PIN No.	1	2	3	4	5	6
Signal name	+5V	GND	+5VE	GNDE	SW3 output	SW4 output

No. 06 <<Connector J6>>

"06 CHEC J6" is displayed on the upper right.

Connector J6 is used for the OP-07 board. If there is no board, only the connector is checked. In this case, a special jig is needed.

"0" to "9" are displayed in order on the lower right. If the jig display is the same, it is O.K. "6" is displayed as "b".

When the ENTER key is pressed, the next test is started.

No. 07 <<A/D>>

"07 CHEC AdC" is displayed on the upper right.

The internal count of the A/D converter is simply averaged and displayed on the lower right. Since deep averaging is being applied, a display response to an input change is delayed.

When the ENTER key is pressed, the next test is started.

No. 08 <<EEPROM>>

"08 CHEC EEP" is displayed on the upper right.

Data is written into and read from the all areas of the EEPROM, and checked and displayed on the lower right.

(00H, 55H, AAH, FFH) displayed are data. It is O.K if "Good" is displayed.

When the ENTER key is pressed, the next test is started.

"no Good" is displayed if NG. Since the CPU is online to the EEPROM, the pattern or board contributes to this failure. The EEPROM contains the calibration and function data. Therefore, when it is replaced, resetting is needed.

* Never turn off power while checking the EEPROM, otherwise its contents will be destroyed.

No. 09 <<OP-01>>

"09 CHEC OP1" is displayed on the upper right and "0" on the lower right. Outputs are turned on (with output transistors off) one by one. When Hold is input, "1" is displayed on the lower right and the outputs are held, displaying "Hold". A special jig is needed.

When the ON/OFF key is pressed, the jig "/PC" LED is turned off in an instant. When the 0 key is pressed, the jig "/PC" LED is turned on in an instant. When the TARE key is pressed, both LEDs are turned off.

This test is ineffective when the OP-01 is not connected and when the OP-03 and OP-04 are connected.

When the ENTER key is pressed, the next test is started.

No. 10 <<OP-03/OP-04>>

<<OP-03>>

"10 CHEC OP3" is displayed on the upper right, followed by "2400 bPS".

It is necessary to short-circuit the output and input of either connector (connectors 1 and 5 or 4 and 9). Make sure that the output data and input data are the same. The data is @0?n<CR><LF>. It is O.K if "0" to "9" are displayed in order on the lower right.

<<OP-04>>

"10 CHEC OP4" is displayed on the upper right, followed by "2400 bPS".

It is necessary to short-circuit the output and input of the D-sub connector (connectors 2 and 3). Make sure that the output data and input data are the same. The data is n<CR><LF>. Output by changing n (= 0 - 9) every about 1.5 seconds. It is O.K if "0" to "9" are displayed in order on the lower right. For the current loop output, "0" to "9" can be printed in the dump mode with the printers (AD8117A, AD8118, etc.) connected. (Only 600/2,400bps)

<<Common to OP-03/OP-04>>

When changing the baud rate, press the corresponding key according to the following table. The specified baud rate is displayed on the upper right.

Key Name	ON/OFF	0	TARE	TARE CLEAR	CROSS/NET
bps	600	1,200	2,400	4,800	9,600

If "0" - "9" and "no Good" are alternately displayed on the lower right, an output or input IC failure or solder bridging may occur. If only "no Good" is displayed, a clock IC failure or solder bridging may occur. Note that "no Good" is sometimes displayed in an instant immediately after the baud rate was changed.

This test is ineffective when the OP-03 and OP-04 are connected or when the OP-01 is not connected.

When the ENTER key is pressed, "END" is displayed on the upper right, returning the state immediately after power on.

AD-4325A

AD-4325A

PARTS LIST
AD4325A MAIN BOARD -1/2

90.08.31

CIRCUIT SYMBOL or DRWG.NO.	PARTS NAME	DESCRIPTION	Q'TY
	7PZ:2323A	MAIN BOARD AD4325A	1
C4,11～26	CC:0.022U	CERAMIC CAPACITOR 0.022μF 80V	17
C6	CC:100P	CERAMIC CAPACITOR 100pF 50V	1
C5	CM:V1H474JZ	FILM CAPACITOR 0.47μF	1
C1,7	CT:1A4R7	TANTALUM CAPACITOR 4.7μF 10V	2
C2,3	CT:1D2R2	TANTALUM CAPACITOR 2.2μF 20V	2
PC5,8	DF:PS-2403-2	PHOTO COUPLER	2
PC1～4,6,7	DF:PS-2403-4	PHOTO COUPLER	6
D3	DI:A54H	DIODE ARRAY	1
DB1	DI:1B4B42	BRIDGE DIODE	1
D1,2	DI:1SS97	DIODE	2
BAT	EB:CR2032-WT12	LITHIUM BATTERY	1
J9	JA:4470-01-1111	CONNECTOR	1
J7	JI:364P024-AG	CONNECTOR	1
J8	JI:16PA-2.54DSA	CONNECTOR	1
(U7)	JS:10328-01-445	IC SOCKET	1
JP1	JS:14120-01	IC SOCKET	1
J1	JT:1-171825-0	CONNECTOR	1
J3,4	JT:1-171825-2	CONNECTOR	2
J2,5	JT:1-172429-2	CONNECTOR	2
J10,11	JT:171825-7	CONNECTOR	2
J6	JT:172429-8	CONNECTOR	1
	PC:2323	PC BOARD	1
Q2,3,4	QT:BA1A4P	TRANSISTOR	3
Q1,5	QT:C1815Y	TRANSISTOR	2
R5～9,11,16～21 23	RC:NAT1K	CARBON RESISTOR 1KΩ 1/4W	13
R25	RC:NAT1M	CARBON RESISTOR 1MΩ 1/4W	1
R1,4	RC:NAT10K	CARBON RESISTOR 10KΩ 1/4W	2
R3,12	RC:NAT22K	CARBON RESISTOR 22KΩ 1/4W	2
R14	RC:NAT27R	CARBON RESISTOR 27Ω 1/4W	1
R22	RC:NAT3.9K	CARBON RESISTOR 3.9KΩ 1/4W	1
R24	RC:NAT330R	CARBON RESISTOR 330Ω 1/4W	1
R2,15	RC:NAT4.7K	CARBON RESISTOR 4.7KΩ 1/4W	1
R13	RC:NAT470R	CARBON RESISTOR 470Ω 1/4W	1
R10	RC:NAT680R	CARBON RESISTOR 680Ω 1/4W	1
RA3,4	RN:IHR-4-102KA	RESISTOR NETWORK 1.0KΩ×4	2

PARTS LIST
AD4325A MAIN BOARD -2/2

90.08.31

CIRCUIT SYMBOL or DRWG.NO.	PARTS NAME	DESCRIPTION	Q'TY
	7PZ:2323A	MAIN BOARD AD4325A	1
RA1	RN:IHR-4-182KA	RESISTOR NETWORK 1.8KΩ×4	1
RA8	RN:IHR-4-223MA	RESISTOR NETWORK 22KΩ×4	1
RA2,6,7	RN:IHR-4-472MA	RESISTOR NETWORK 4.7KΩ×4	3
RA5,9	RN:IHR-8-223MA	RESISTOR NETWORK 22KΩ×8	2
RA10	RN:IHR-8-392JA	RESISTOR NETWORK 3.9KΩ×8	1
SW1	SS:SSS022	SWITCH	1
TP1,2,3	TM:CP-10	TEST PIN	3
U11	UA:MB3773PS-G	VOLTAGE COMPARATOR	1
	UA:TD62503BP	TRANSISTOR ARRAY	2
U12	UC:D78C10G-1B	CMOS CPU	1
U19	UC:HCU04	CMOS IC	1
U10,18	UC:HC00	CMOS IC	2
U2	UC:HC02	CMOS IC	1
U4	UC:HC08	CMOS IC	1
U5,22	UC:HC32	CMOS IC	1
U17	UC:HC4520	CMOS IC	1
U15	UC:HC540	CMOS IC	1
U14,16	UC:HC573	CMOS IC	2
U9	UC:RP93C46	EEPROM	1
U8	UC:5564AFL-15	CMOS SRAM	1
U1,6	UN:M66300FP	PISO DATA BUFFER IC	2
	UN:27C256	EPROM	1
U3	UT:LS06	TTL	1
U13	UT:159	TTL	1
X1	XT:C4SB-12M-K02	CRYSTAL 12MHz	1
	04:B42944A		2
	05:A40702	SPACER 16㎜	1
	05:B43312	SPACER M2.6×8	2

PARTS LIST
AD4325A POWER BOARD -1

90.08.31

CIRCUIT SYMBOL or DRWG.NO.	PARTS NAME	DESCRIPTION	Q'TY
	7PZ:2324	POWER BOARD AD4325A	1
C1,2	CC:0.01U500V	CERAMIC CAPACITOR 0.01μF 500V	2
C11～16	CC:0.1U25V	CERAMIC CAPACITOR 0.1μF 25V	6
C4,8	CK:SME25VB2200	ELECTROLYTIC CAPACITOR 2200μF 25V	2
C5,7,9	CK:SM25VB22	ELECTROLYTIC CAPACITOR 22μF 25V	3
C17	CK:SM50VB10	ELECTROLYTIC CAPACITOR 10μF 50V	1
C10	CK:SXE35VB1000	ELECTROLYTIC CAPACITOR 1000μF 35V	1
	CK:9117	ELECTROLYTIC CAPACITOR 4700μF 35V	1
C3	CM:E6104KZ	FILM CAPACITOR 0.1μF	1
D1,2,3	DI:W02	BRIDGE DIODE	3
D4,5	DI:1B4B42	BRIDGE DIODE	2
DZ1	DZ:05Z5.6	ZENNER DIODE 5.6V	1
	FH:85PN0819	FUSE HOLDER	2
J2	JT:1-171825-2	CONNECTOR	1
J3	JT:171825-3	CONNECTOR	1
J1	JT:172369-3	CONNECTOR	1
	JT:61134-1	CONNECTOR	2
	KO:280A-08BR	CONNECTOR CABLE	2
L1,2	LL:SF-T8-40S	COIL	2
	PC:2324A	PC BOARD	1
R1	RC:NAT22K	CARBON RESISTOR 22KΩ 1/4W	1
R2,3	RC:NAT82R	CARBON RESISTOR 82Ω 1/4W	2
	TF:378	TRANSFORMER	1
U2	UR:78M12HF	REGURATOR	1
U1,3	UR:7805HF	REGURATOR	2
	04:B42955	HEAT SINK	1

PARTS LIST
AD4325A DISPLAY BOARD -1

90.08.31

CIRCUIT SYMBOL or DRWG.NO.	PARTS NAME	DESCRIPTION	Q'TY
	7PZ:2330	DISPLAY BOARD AD4325A	1
C3～8	CC:FK16Y5V1H104	CAPACITOR 0.1μF 16V	6
C1	CK:SXE25VB10	CAPACITOR 10μF 25V	1
C2	CT:1A4R7	CAPACITOR 4.7μF 10V	1
	DA:LL-4BK	LED SPACER 4mm	2
D13	DI:1SS97	DIODE	1
D1～12	DI:1S1588	DIODE	12
LED3～20	DL:TLS347T-AAD	LED	18
LED1,2	DL:TLUG144	LED	2
	ED:FIP7B13	DISPLAY TUBE	1
J1	JT:1-171825-0	CONNECTOR	1
J3	JT:1-172429-2	CONNECTOR	1
J2	JT:171825-3	CONNECTOR	1
	PC:2330	PC BOARD	1
Q1～3	QT:BA1L4Z	TRANSISTOR	3
R2	RC:NAT1.2K	RESISTOR 1.2KΩ 1/4W	1
R5,6	RC:NAT22K	RESISTOR 22KΩ 1/4W	2
R1	RC:NAT4.7K	RESISTOR 4.7KΩ 1/4W	1
R3,4	RC:NAT470R	RESISTOR 470Ω 1/4W	2
K1～12	SK:TM1-01/0010	SWITCH	12
S1～4	SS:2NB2X2AG	SWITCH	4
TP1～3	TM:LC-2-G-0	TEST PIN	3
U4	UA:TD62783AP	TRANSISTOR ARRAY	1
U3	UC:HC595	CMOS IC	1
U5	UC:MSC1164GS	20 BIT VFD DRIVER IC	1
U1,2	UC:TD62C850N	16 BIT LATCH DRIVER IC	2
	07:B43041	KEY TOP	1

PARTS LIST
AD4325A TERMINAL BOARD -1

90.08.31

CIRCUIT SYMBOL or DRWG.NO.	PARTS NAME	DESCRIPTION	Q'TY
	7PZ:2361	TERMINAL BOARD AD4325A	
	JI:CL616-0023-0	CONNECTOR	1
	PC:2361	PC BOARD	1
	TM:40S1CXS17P11	TERMINAL	1
	01:B43496	PANEL	1
	05:B43835	SPACER BOLT	2

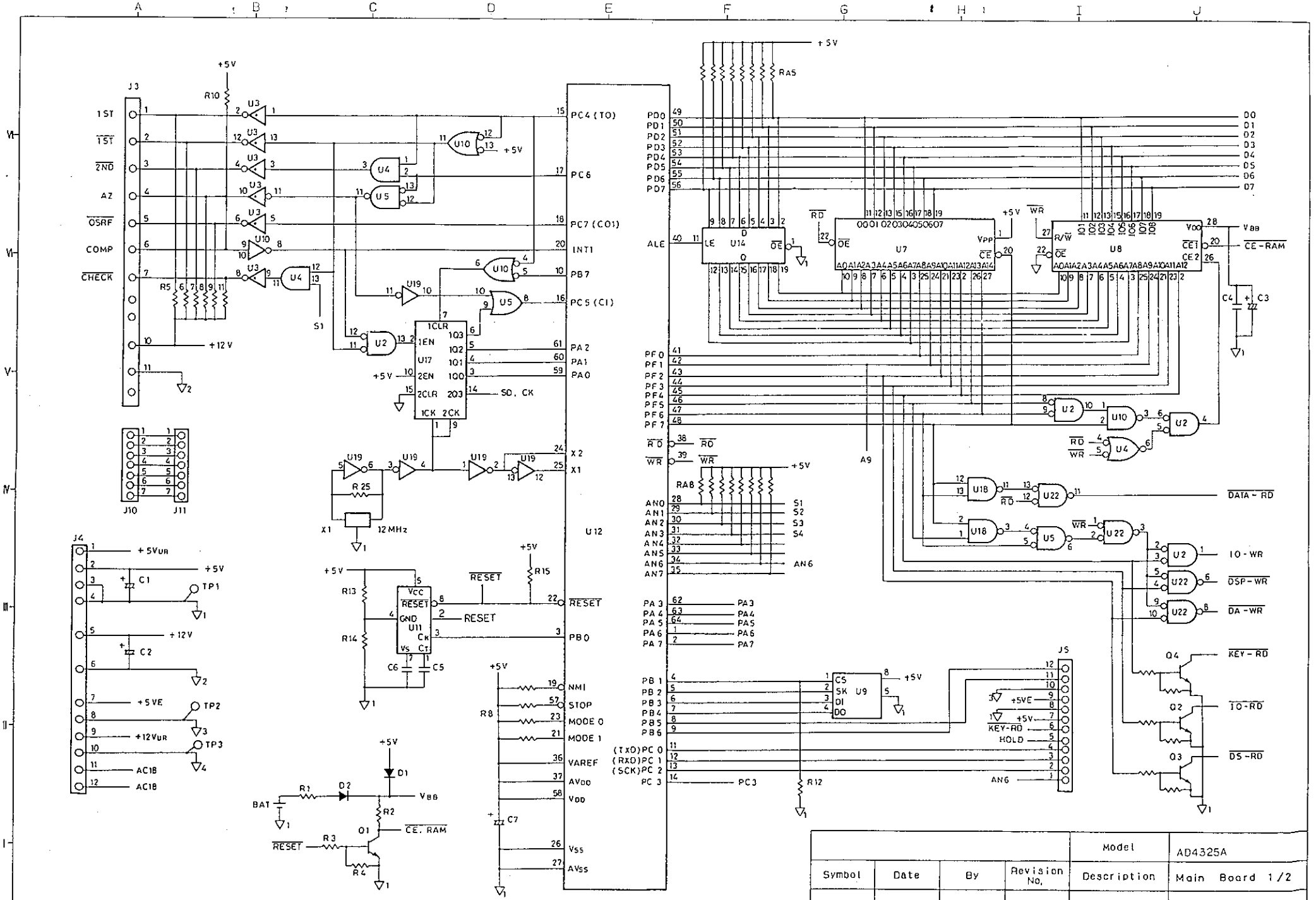

Symbol	Date	By	Revision No.	Model	AD4325A
				Description	Main Board 1/2
				Stock No.	PZ:2323A
			318606	Drwg.No.	

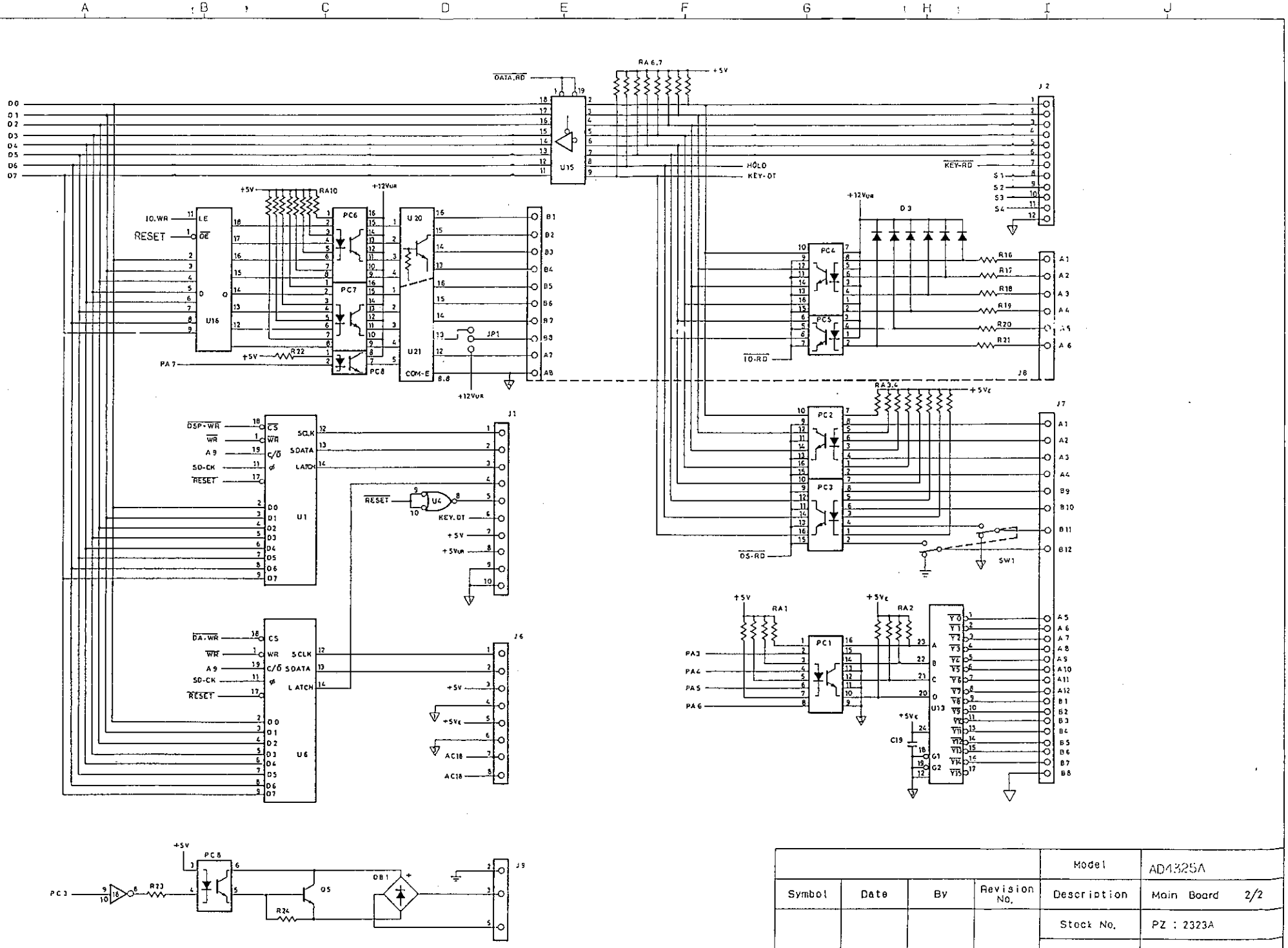

				Model	AD4325A
Symbol	Date	By	Revision No.	Description	Main Board 2/2
				Stock No.	PZ : 2323A
			318606	Drwg.No.	

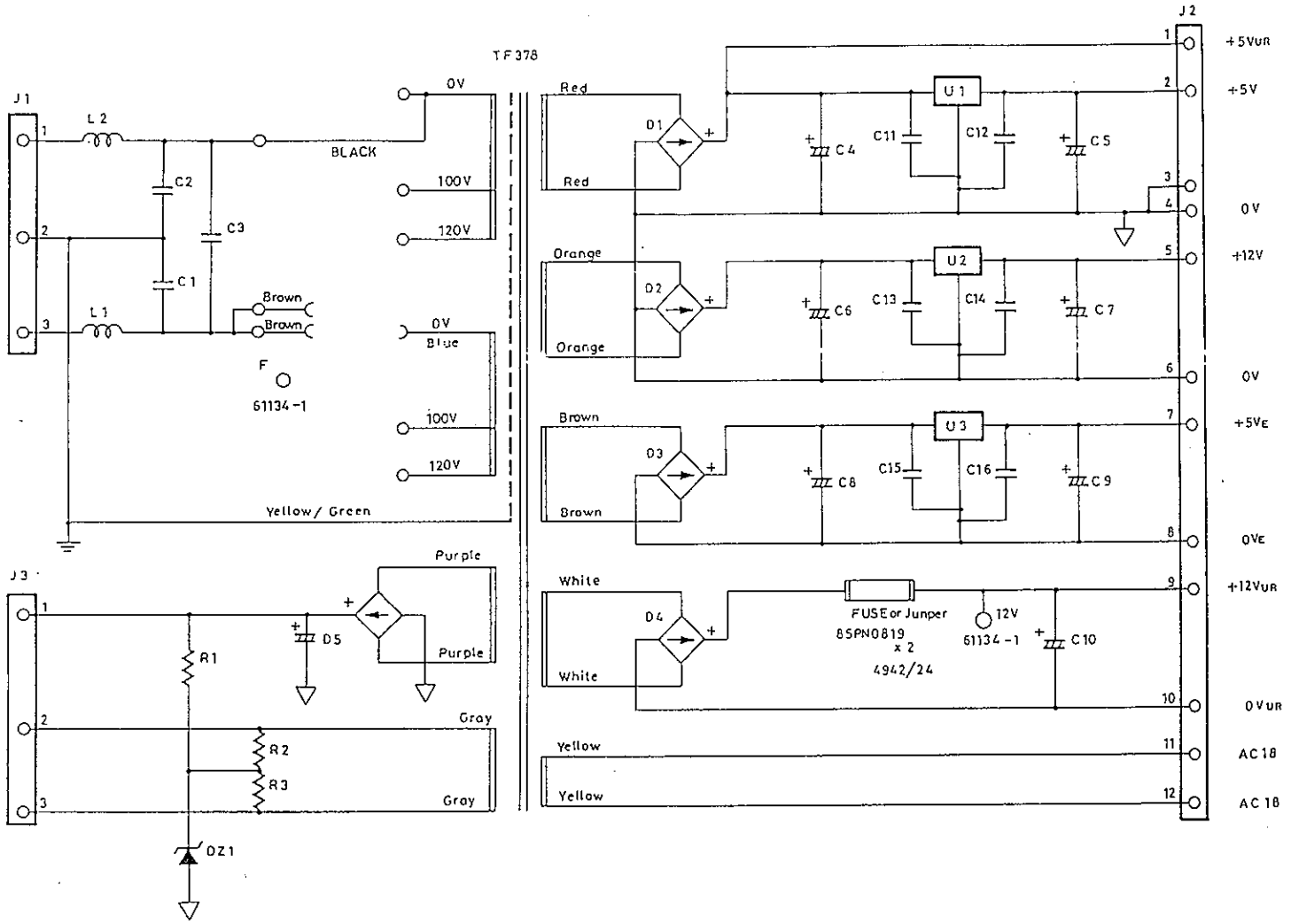

				Model	AD4325A
Symbol	Date	By	Revision No.	Description	Power Supply Board
				Stock No.	PZ : 2324/CK
				Drwg.No.	EC3-01325

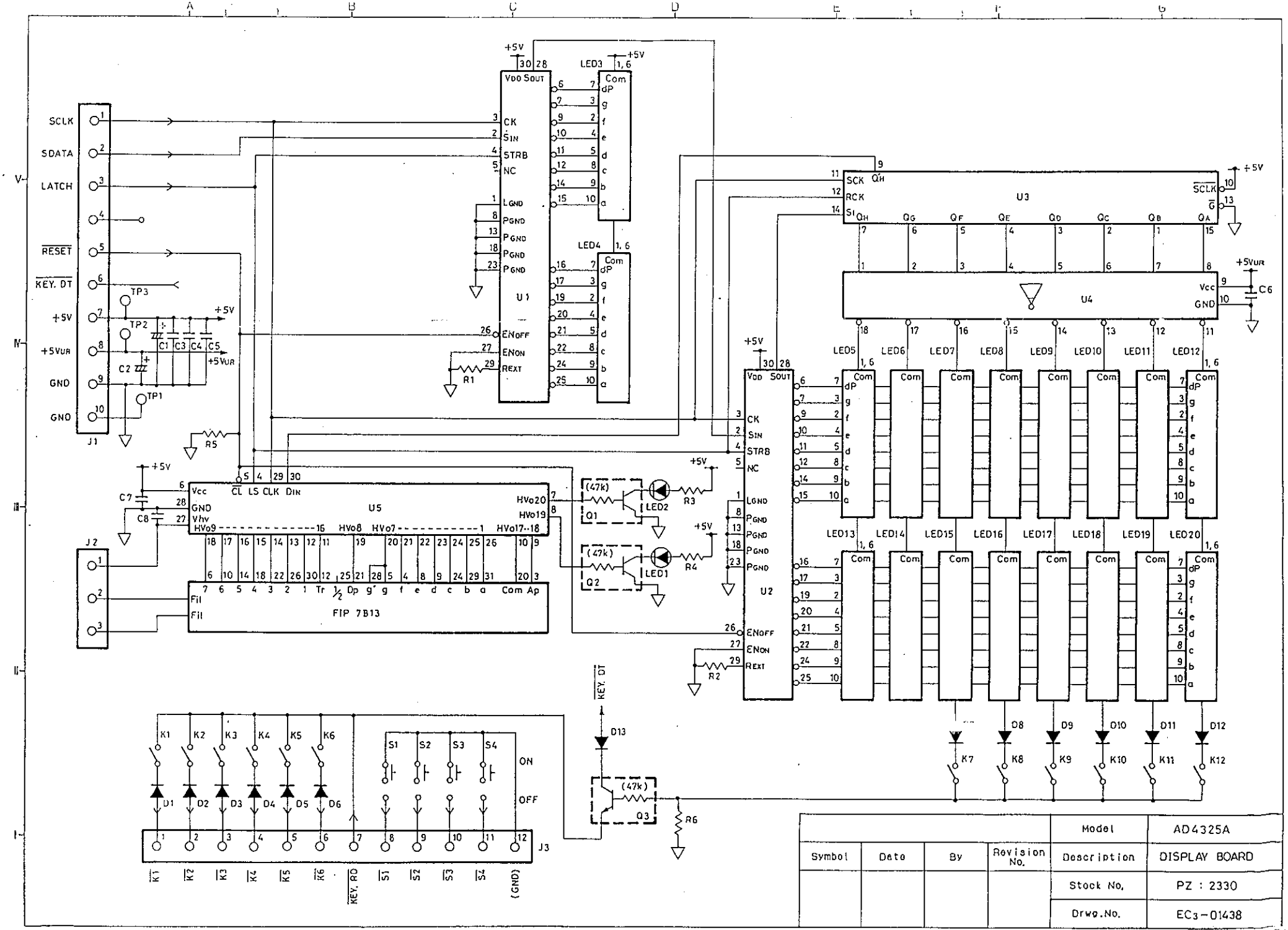

				Model	AD4325A
Symbol	Date	By	Revision No.	Description	DISPLAY BOARD
				Stock No.	PZ : 2330
				Drwg.No.	EC3-01438

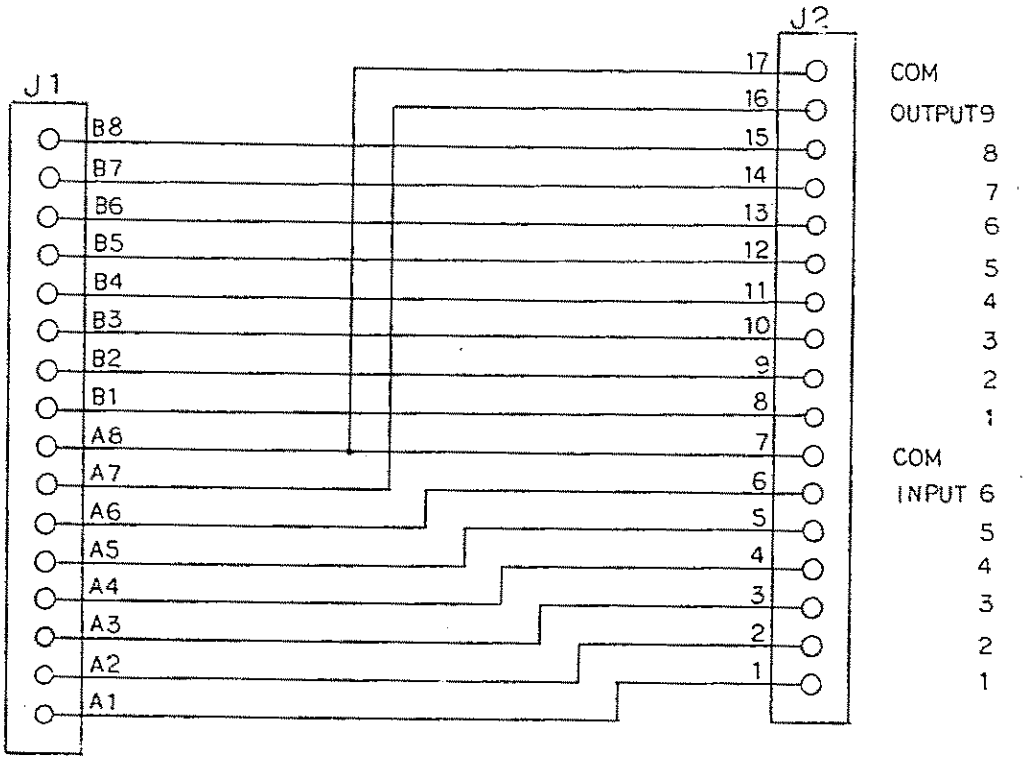

				Model	AD4325A
Symbol	Date	By	Revision No.	Description	TERMINAL BOARD
				Stock No.	PZ:2361
				Drwg.No.	

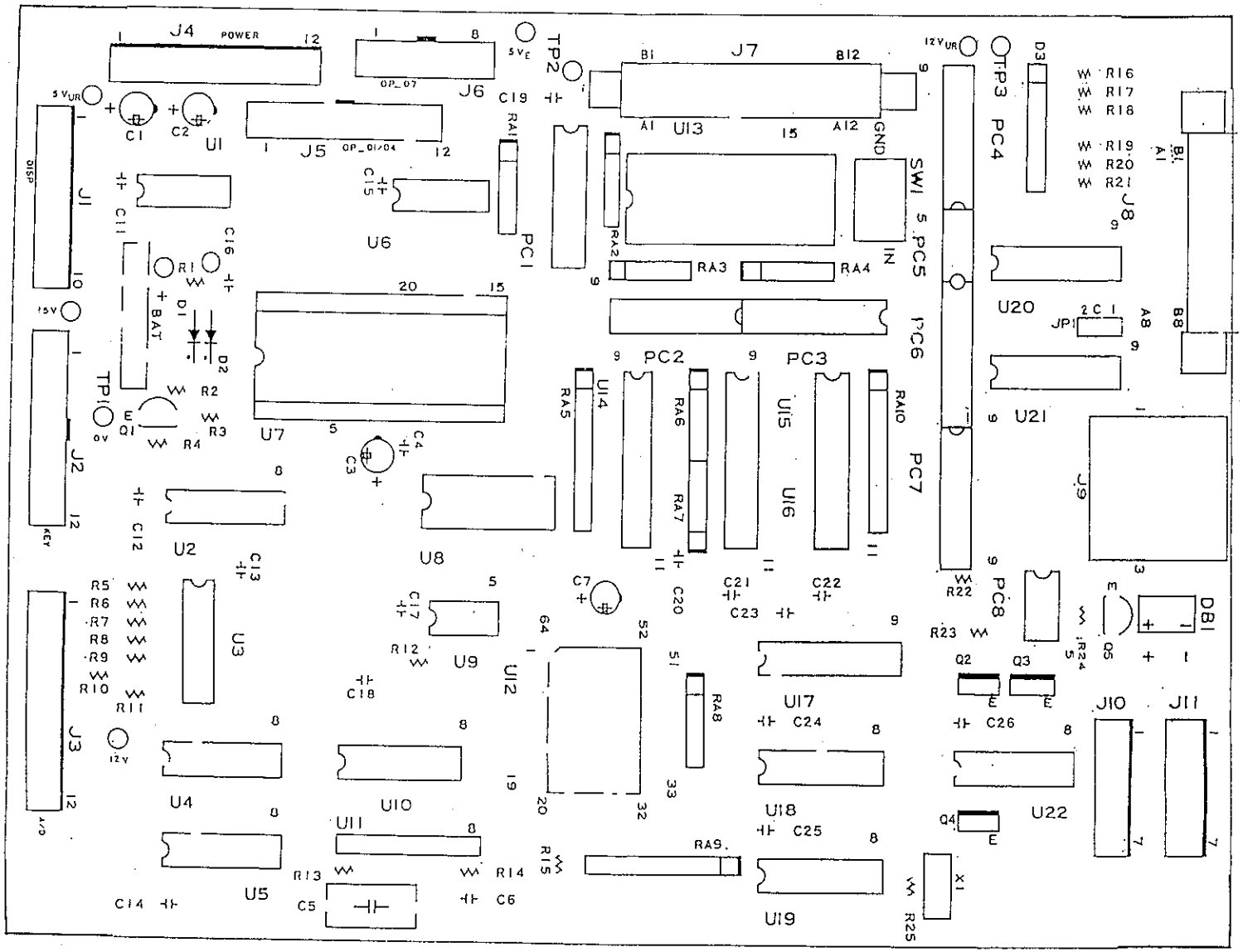

				Model	AD4325A
Symbol	Date	By	Revision No.	Description	MAIN BOARD
				Stock No.	PZ:2323A
				Drwg.No.	

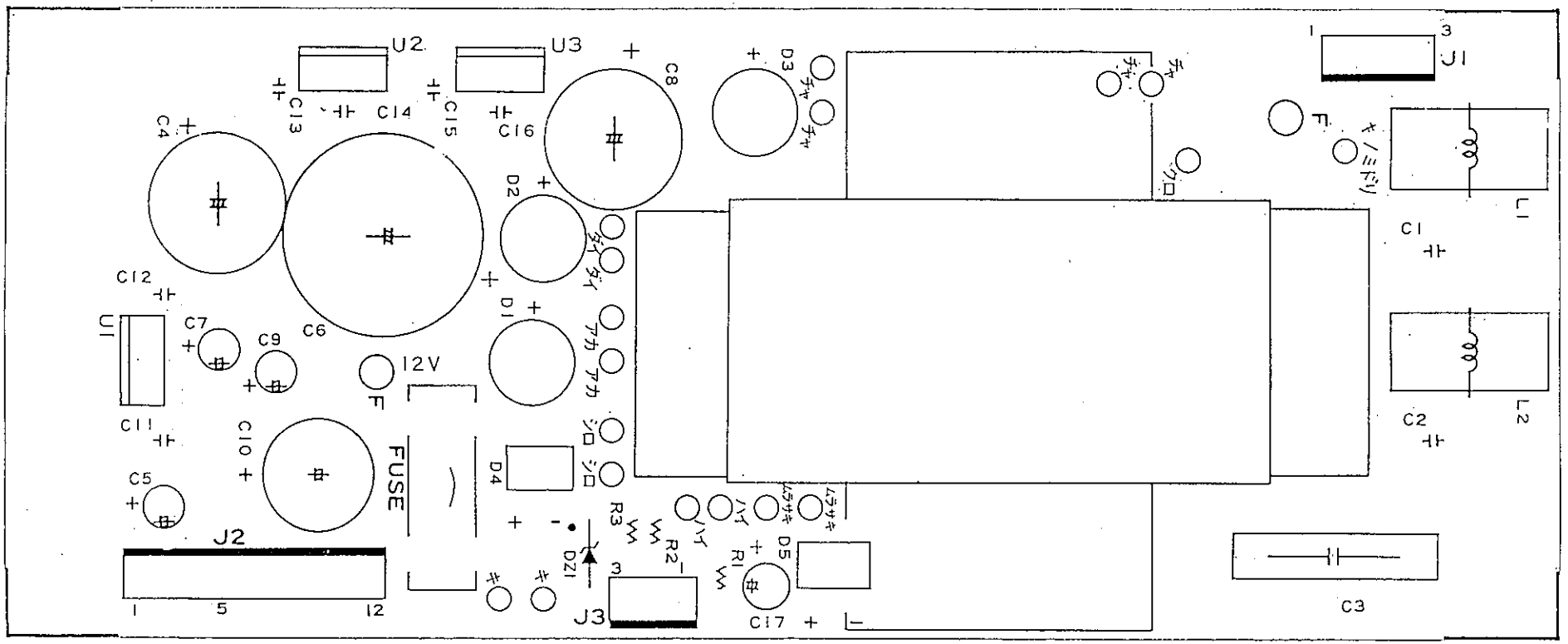

				Model	AD4325A
Symbol	Date	By	Revision No.	Description	POWER BOARD
				Stock No.	PZ:2324
				Drwg.No.	KZ3-00875

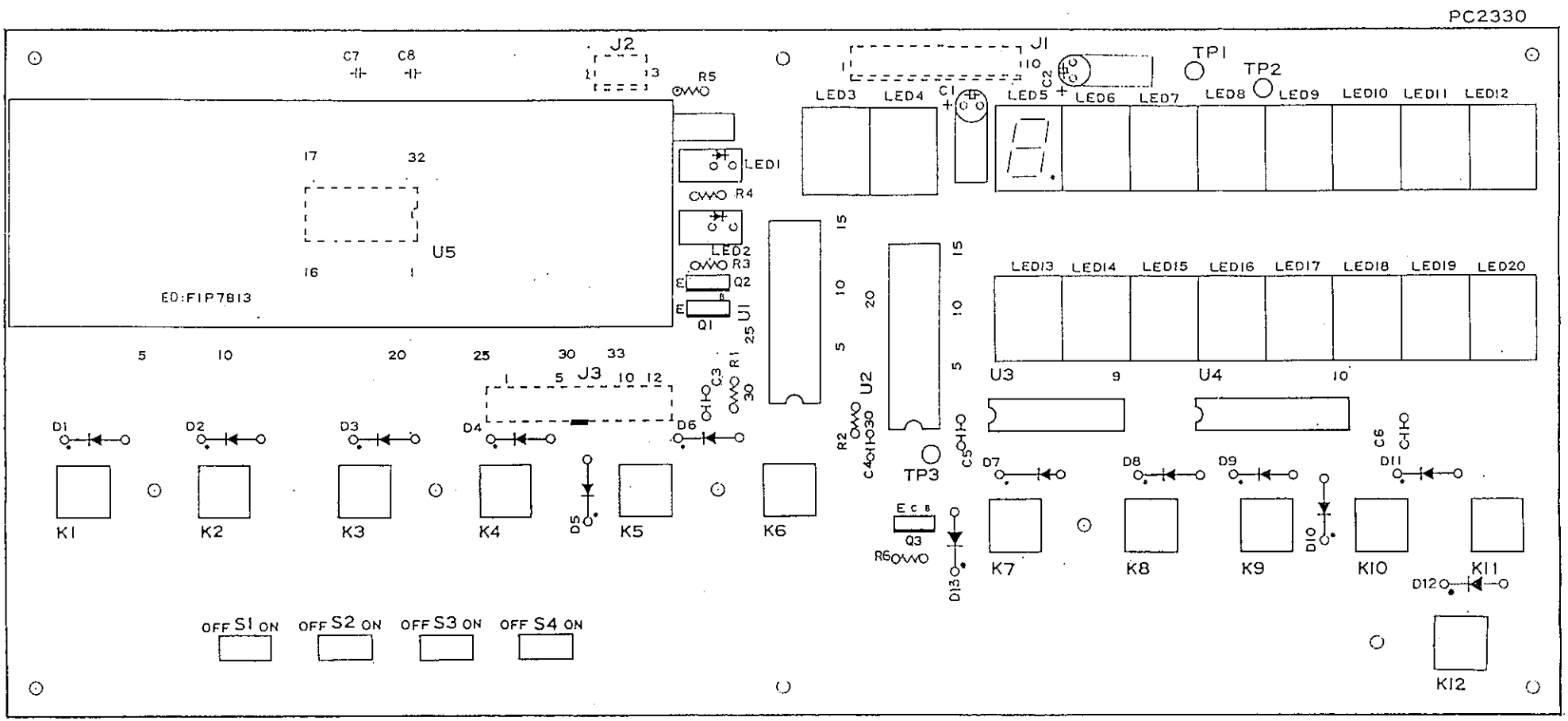

				Model	AD4325A
Symbol	Date	By	Revision No.	Description	Display Board
				Stock No.	PZ:2330
				Drwg.No.	

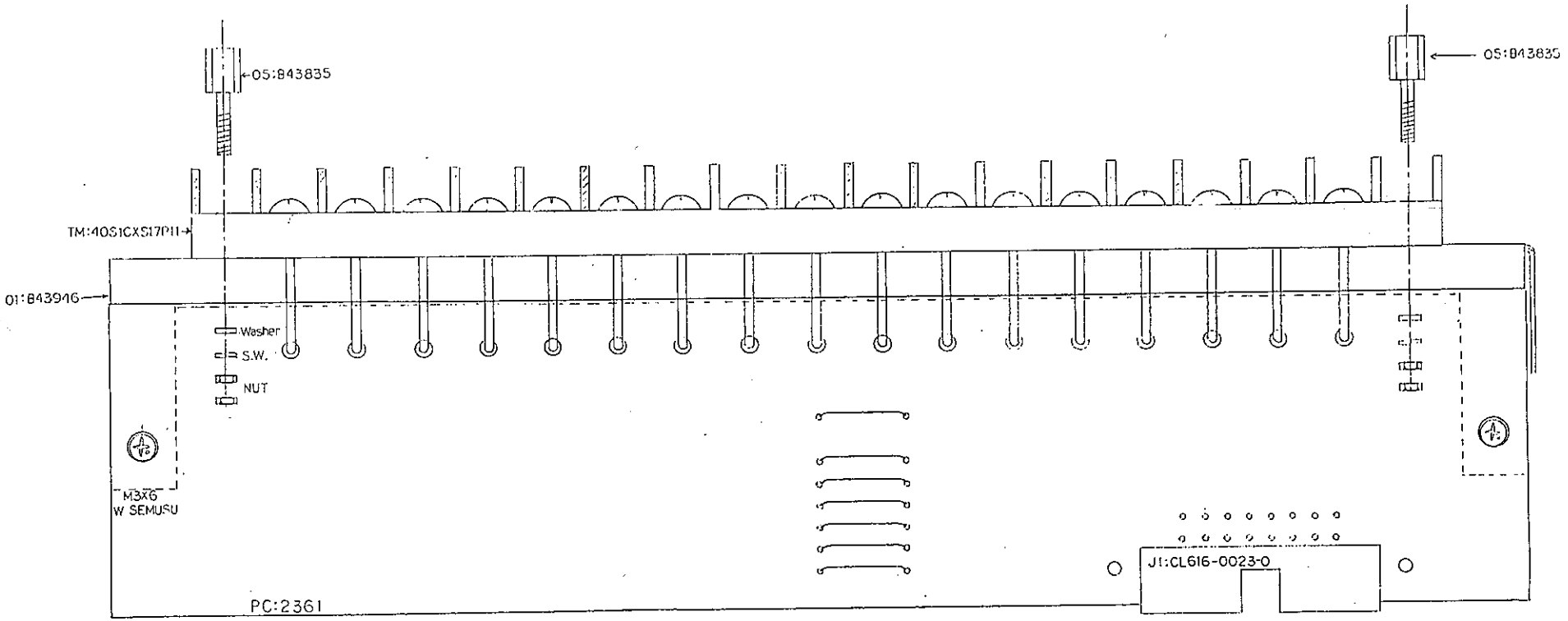

				Model	AD4325A
Symbol	Date	By	Revision No.	Description	Terminal Board
				Stock No.	PZ:2361
				Drwg.No.	

EXPLODED VIEW AD4325A

9. 4.1990

DRWG.NO.	PARTS NAME	DESCRIPTION	QTY
1	02:A37030	COVER	2
2	04:B43493	SLIDE RAIL	2
3	01:A37028	REAR PANEL	1
4	05:B43490	SIDE FRAME	2
5	02:A48921	ANALOG BLANK PANEL	1
6	04:A49263	BCD OUT BLANK PANEL	1
7	01:B43496	PANEL	1
8	04:B43492	SUB FRAME	1
9	04:B43491		2
10	07:A10144-1	FRONT FRAME	1
11	01:A37032	KEY SHEET A (JPN)	1
(11)	01:A37689	KEY SHEET A (INT'L)	1
12	07:B43495A	FILTER B	1
13	07:B43494	FILTER A	1
14	07:B43488-1	BLANK COVER	1
15	05:B44285	M3 SEALING BOLT	2
16	07:A45440	SEALING SCREW WITH HOLE	2
A		M3 WASHER	
B		M3X8 W SEMUSU	
C		M4X6 W SEMUSU	
D		M3X6 W SEMUSU	
E		M4 NYLON WASHER	
F		M4X10 TRUSS SCREW	
G		M3 NUT	
H		M4X8 W SEMUSU SCREW	
I		2.5 E RING	

EXPLODED VIEW

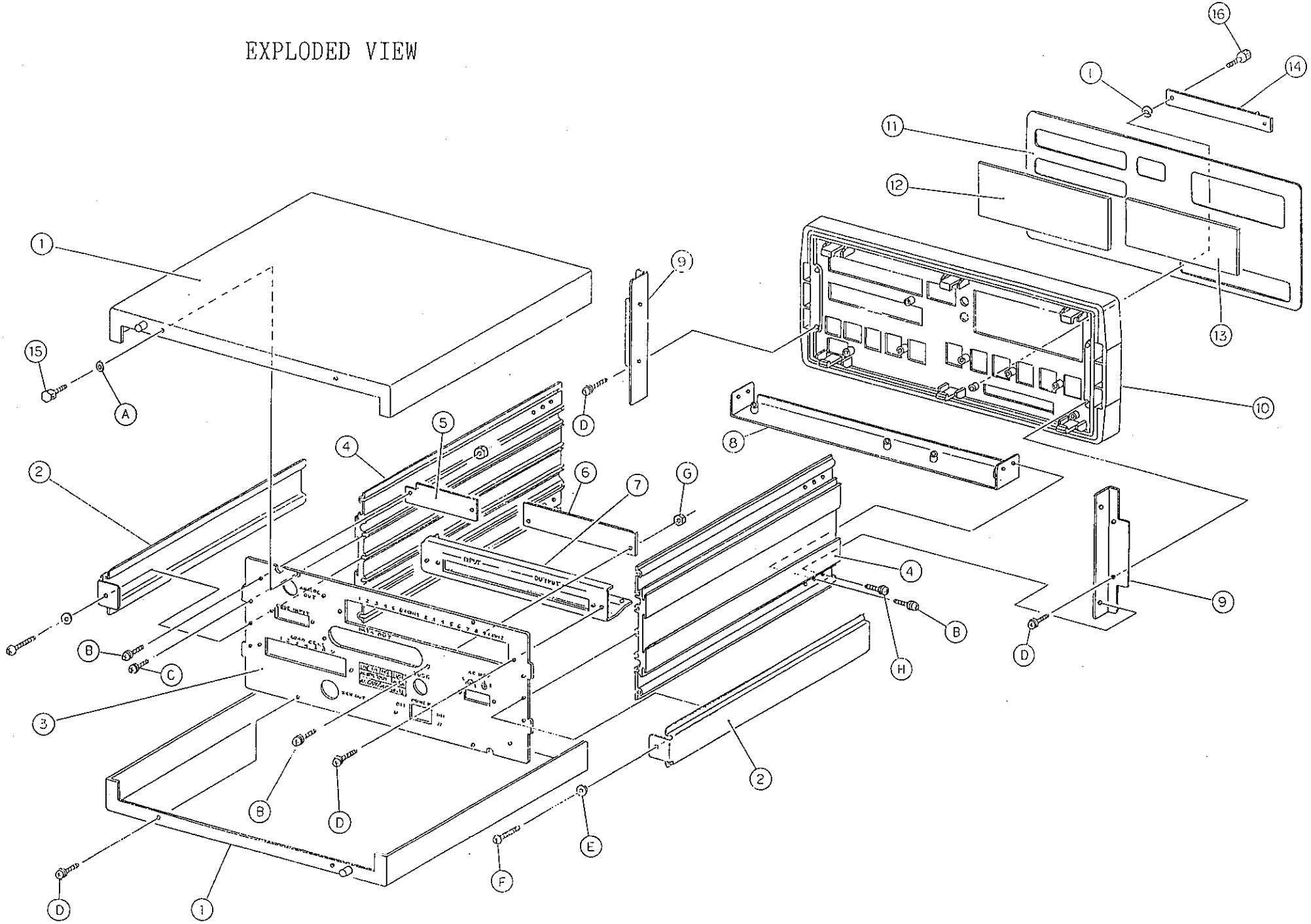

AD-4325V

7PZ:2323 PARTS LIST

CIRCUIT SYMBOL	PARTS NAME	DESCRIPTION	Q'TY
C4,11～26	CC:0.022U	CAPACITOR 0.01μF 500V	17
C6	CC:100P	CAPACITOR 100PF 50V	1
C5	CM:V1H474JZ	CAPACITOR 0.47μF	1
C1,7	CT:1A4R7	CAPACITOR 4.7uF 10V	2
C2,3	CT:1D2R2	CAPACITOR 2.2μF 20V	2
PC5,8	DF:PS-2403-2	PHOTO COUPLER	2
PC1～4,6,7	DF:PS-2403-4	PHOTO COUPLER	6
DB1	DI:1B4B42	BRIDGE DIODE	1
D1,2	DI:1SS97	DOIDE	2
D3	DI:A54H	DIODE ARRAY	1
BAT	EB:CR2032-WT12	LITHIUM BATTERY	1
J9	JA:4470-01-1111	DIN CONNECTOR	1
J8	JI:16PA-2.54DSA	CONNECTOR	1
J7	JI:364P024-AG	CONNECTOR	1
U7	JS:10328-01-445	IC SOCKET	1
JP1	JS:14120-01	IC SOCKET	1
J1	JT:1-171825-0	POST HEADER	1
J3,4	JT:1-171825-2	POST HEADER	2
J2,5	JT:1-172429-2	POST HEADER	2
J10,11	JT:171825-7	POST HEADER	2
J6	JT:172429-8	POST HEADER	1
	PC:2323	PRITED CIRCUIT BOARD	1
Q2,3,4	QT:BA1A4P	TRANSISTOR	3
Q1,5	QT:C1815Y	TRANSISTOR	2
R1,4	RC:NAT10K	RESISTOR 10KΩ 1/4W	2
R5～9,11,23	RC:NAT1K	RESISTOR 1KΩ 1/4W	7
R25	RC:NAT1M	RESISTOR 1MΩ 1/4W	1
R3,12	RC:NAT22K	RESISTOR 22KΩ 1/4W	2
R14	RC:NAT27R	RESISTOR 27Ω 1/4W	2
R22,16～21	RC:NAT3.9K	RESISTOR 3.9KΩ 1/4W	7
R24	RC:NAT330R	RESISTOR 330Ω 1/4W	1
R2,15	RC:NAT4.7K	RESISTOR 4.7KΩ 1/4W	2
R13	RC:NAT470R	RESISTOR 470Ω 1/4W	1
R10	RC:NAT680R	RESISTOR 680Ω 1/4W	1
RA3,4	RN:IHR-4-102MA	RESISTOR NETWORK 1K×4, 1/8W	2
RA1	RN:IHR-4-182KA	RESISTOR NETWORK	1
RA8	RN:IHR-4-223MA	RESISTOR NETWORK 22K x 4, 1/8W	1
RA2,6,7	RN:IHR-4-472MA	RESISTOR NETWORK 4.7 x 4, 1/8W	3
RA5,9	RN:IHR-8-223MA	RESISTOR NETWORK 22KΩ×8	2
RA10	RN:IHR-8-392JA	RESISTOR NETWORK 3.9KΩ×8	1
SW1	SS:SSS022	SLIDE SWITCH	1
TP1,2,3	TM:CP-10	TEST PIN	3
U11	UA:MB3773PS-G	VOLTAGE COMPARATOR	1
U20,21	UA:TD62503BP	TRANSISTOR ARRAY	2
U8	UC:5564AFL-15	RAM	1
U12	UC:D78C10G-1B	CPU	1
U10,18	UC:HC00	CMOS IC	2
U2	UC:HC02	CMOS IC	1
U4	UC:HC08	CMOS IC	1
U5,22	UC:HC32	CMOS IC	2
U17	UC:HC4520	CMOS IC	1
U15	UC:HC540	CMOS IC	1
U14,16	UC:HC573	CMOS IC	2
U19	UC:HCU04	CMOS IC	1
U9	UC:RP93C46	EEPROM	1
U1,6	UN:M66300FP	DATA BUFFER IC	2

7PZ:2323 PARTS LIST

CIRCUIT SYMBOL	PARTS NAME	DESCRIPTION	Q'TY
U13	UT:159	TTL	1
U3	UT:LS06	TTL	1
X1	XT:C4SB-12M-K02	RESONATOR 12MHz	1

7PZ:2324 PARTS LIST

CIRCUIT SYMBOL	PARTS NAME	DESCRIPTION	Q'TY
	04:B42955	HEAT SINK	1
C1,2	CC:0.01U500V	CAPACITOR 0.01uF 500V	2
C11～16	CC:0.1U25V	CAPACITOR 0.1μF 25V	6
C6	CK:9117	CAPACITOR 4700μF 35V	1
C17	CK:SM50VB10	CAPACITOR 10μF 50V	1
C5,7,9	CK:SME25VB22	CAPACITOR 22μF 25V	3
C8	CK:SME25VB2200	CAPACITOR 2200μF 25V	1
C4	CK:SMG25VB4700	CAPACITOR 4700μF 25V	1
C10	CK:SXE35VB1000	CAPACITOR 1000μF 25V	1
C3	CM:E6104KZ	FILM CAPACITOR	1
D4,5	DI:1B4B42	DIODE BRIDGE	2
D1,2,3	DI:W02	DIODE BRIDGE	3
DZ1	DZ:05Z5.6	ZENER DIODE	1
	FH:85PN0819	FUSE HOLDER	2
J2	JT:1-171825-2	CONNECTOR	1
J3	JT:171825-3	CONNECTOR	1
J1	JT:172369-3	CONNECTOR	1
	JT:61134-1	CONNECTOR	2
	KO:280A-08BR	CONNECTOR CABLE	2
L1,2	LL:SF-T8-40S	COIL	2
	PC:2324A	PRINTED CIRCUIT BOARD	1
R1	RC:NAT22K	RESISTOR 22KΩ 1/4W	1
R2,3	RC:NAT82R	RESISTOR 82Ω 1/4W	2
	TF:378	TRANSFORMER	1
U2	UR:7805HF	REGURATOR	2
U1,3	UR:78M12HF	REGURATOR	1

7PZ:2488 PARTS LIST

CIRCUIT SYMBOL	PARTS NAME	DESCRIPTION	Q'TY
C3～8	CC:FK16Y5V1H104	CAPACITOR 0.1μF	6
C2	CK:SXE25VB10	CAPACITOR 10uF/25V	1
C1	CT:1A4R7	CAPACITOR 4.7uF/10V	1
D1～12	DI:1S1588	DIODE	12
D13	DI:1SS97	DIODE	1
LED3～20	DL:TLS347T-AAD	LED	18
D1,2	DL:TLUG144	LED	2
	ED:FIP7B[illegible]	DISPLAY TUBE	1
J1	JT:1-171825-0	POST HEADER	1
J3	JT:1-172429-2	POST HEADER	1
J2	JT:171825-3	POST HEADER	1
	PC:2488A	PRINTED CIRCUIT BOARD	1
Q1,2,3	QT:BA1L4Z	TRANSISTOR	3
R2	RC:NAT1.2K	RESISTOR 1.2KΩ 1/4W	1
R5,6	RC:NAT22K	RESISTOR 22KΩ 1/4W	2
R1	RC:NAT4.7K	RESISTOR 4.7KΩ 1/4W	1
R3,4	RC:NAT470R	RESISTOR 470Ω 1/4W	2
K1～12	SK:TM1-01/0010	SWITCH	12
S1～4	SS:2NB2X2AG	KEY SWITCH	4
T1～3	TM:LC-2-G-0	TEST PIN	3
U3	UA:TD62783AP	TRANSISTOR ARRAY	1
U4	UC:HC595	CMOS IC	1
U1	UC:MSC1164GS	FLUORESCENCE DISPLAY DRIVER	1
U2,5	UC:TD62C850N	LATCH DRIVER	2

7PZ:2361 PARTS LIST

CIRCUIT SYMBOL	PARTS NAME	DESCRIPTION	Q'TY
	01:B43496	PANNEL	1
	05:B43835	TERMINAL SPACER	2
	J1:CL616-0023-0	CONNECTOR	1
	PC:2361	PRINTED CIRCUIT BOARD	1
	TM:40S1CXS17P11	TERMINAL BASE	1

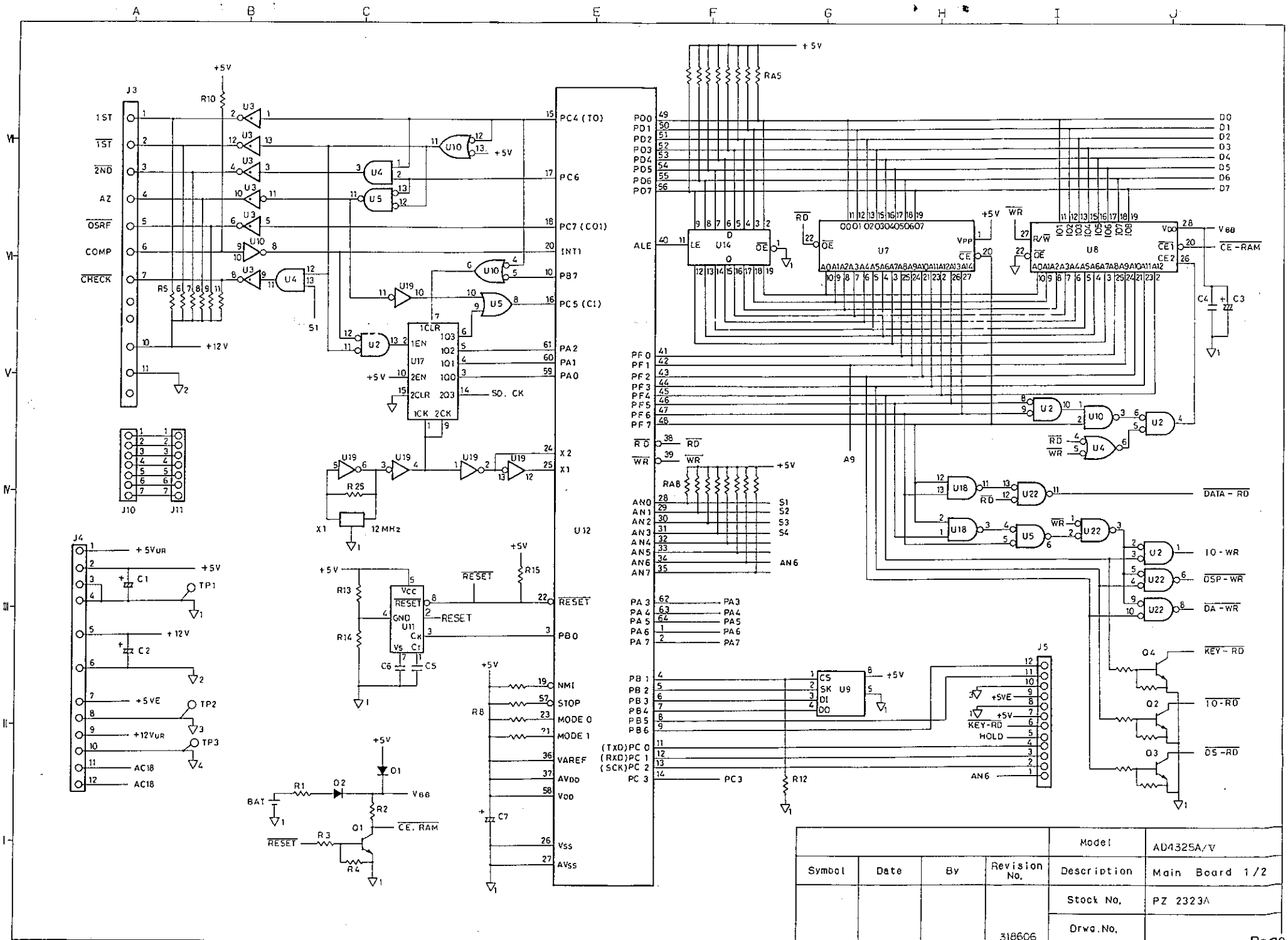

				Model	AD4325A/V
Symbol	Date	By	Revision No.	Description	Main Board 1/2
				Stock No.	PZ 2323A
			318606	Drwg.No.	

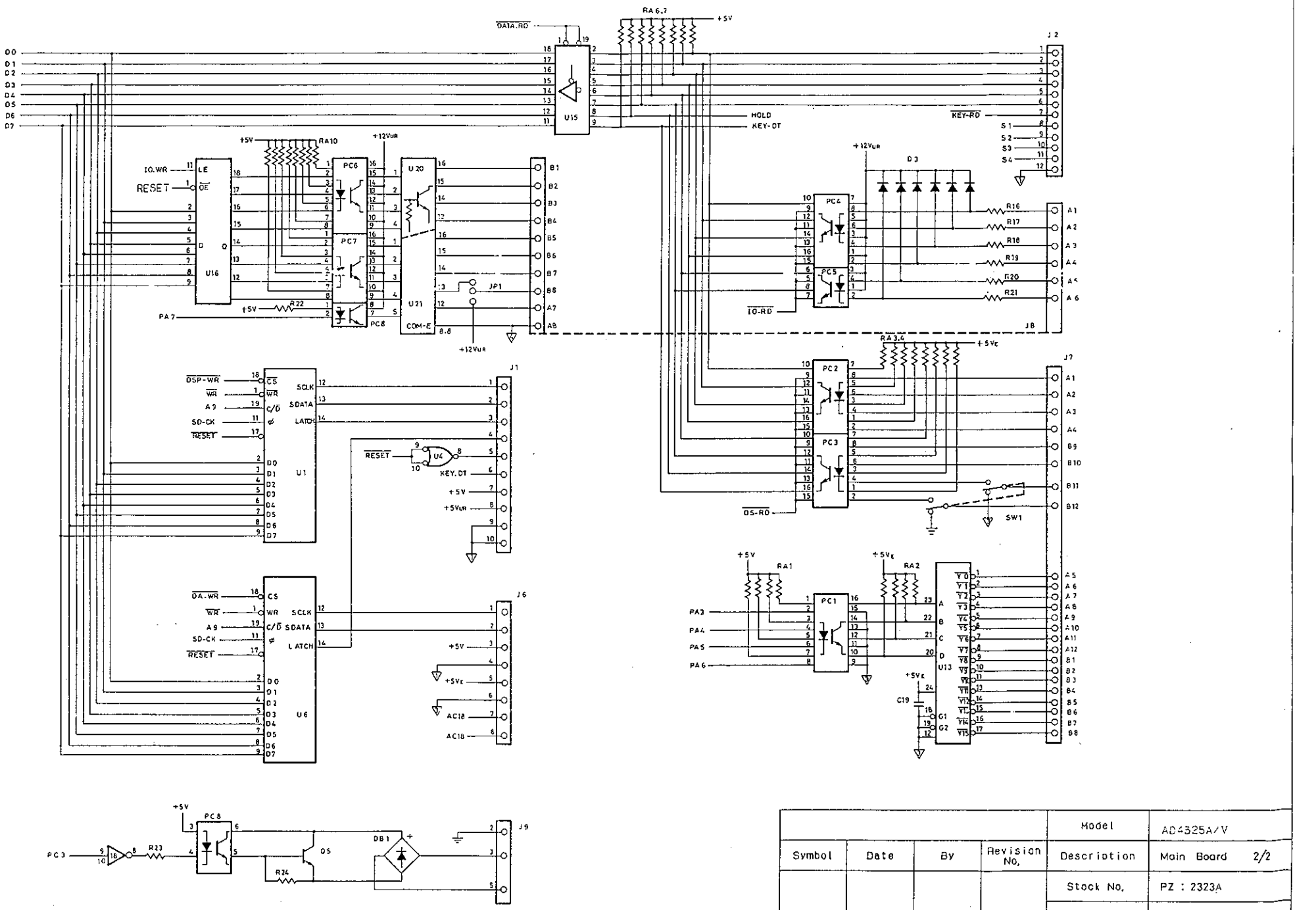

				Model	AD4325A/V
Symbol	Date	By	Revision No.	Description	Main Board 2/2
				Stock No.	PZ : 2323A
			318606	Drwg.No.	

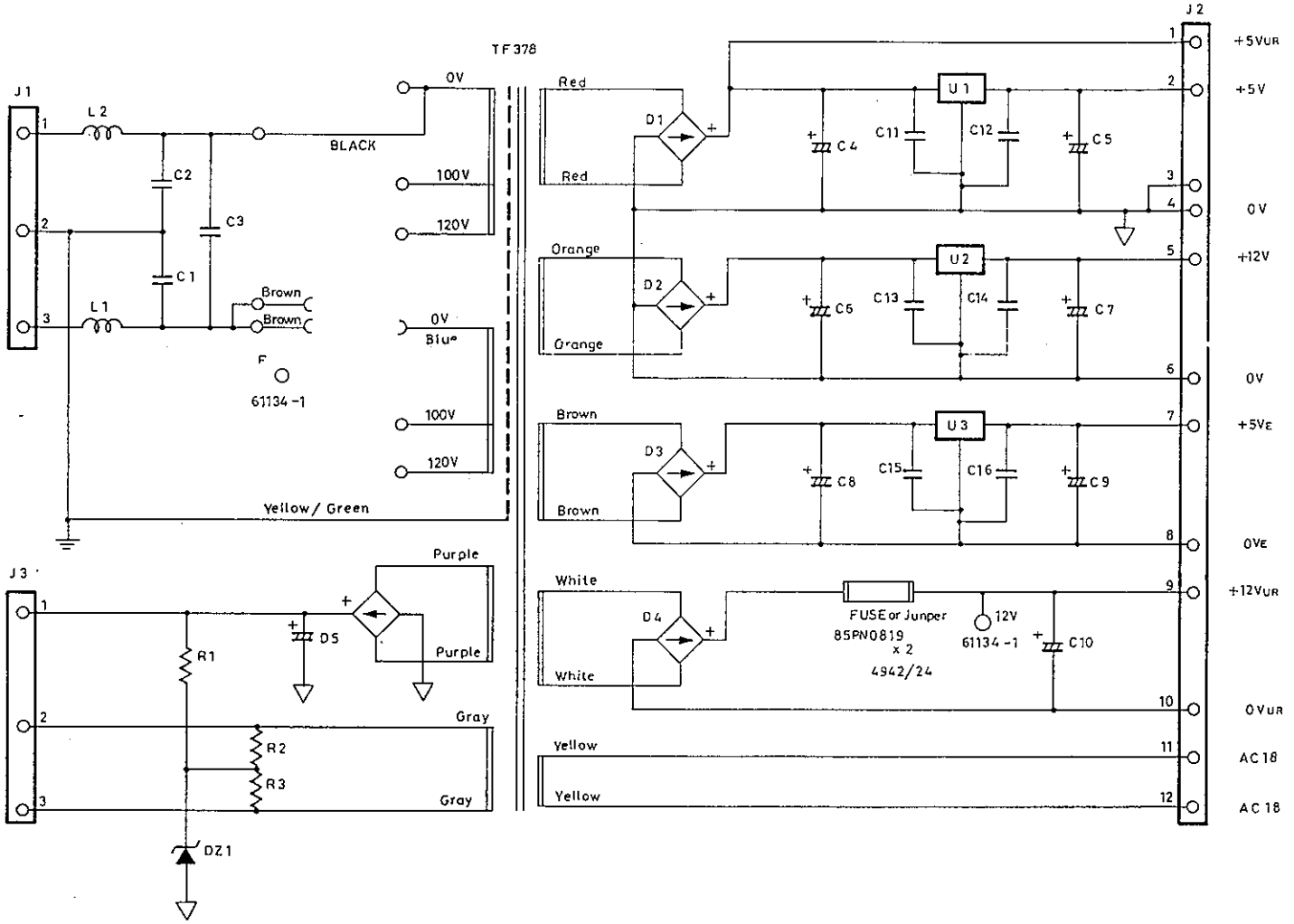

				Model	AD4325A/V
Symbol	Date	By	Revision No.	Description	Power Supply Board
				Stock No.	PZ : 2324
				Drwg.No.	EC3-01325

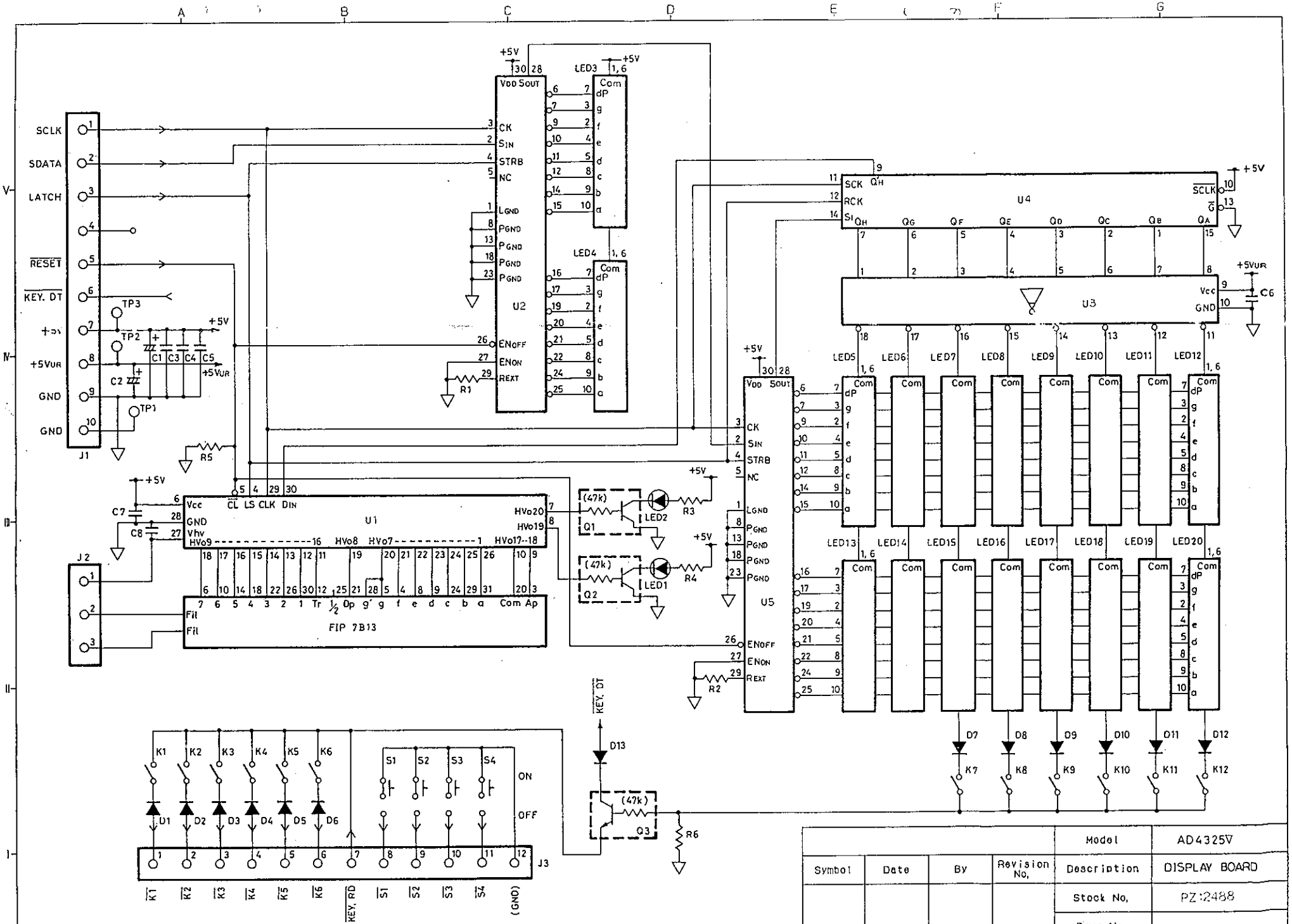

				Model	AD4325V
Symbol	Date	By	Revision No,	Description	DISPLAY BOARD
				Stock No,	PZ:2488
				Drwg.No,	

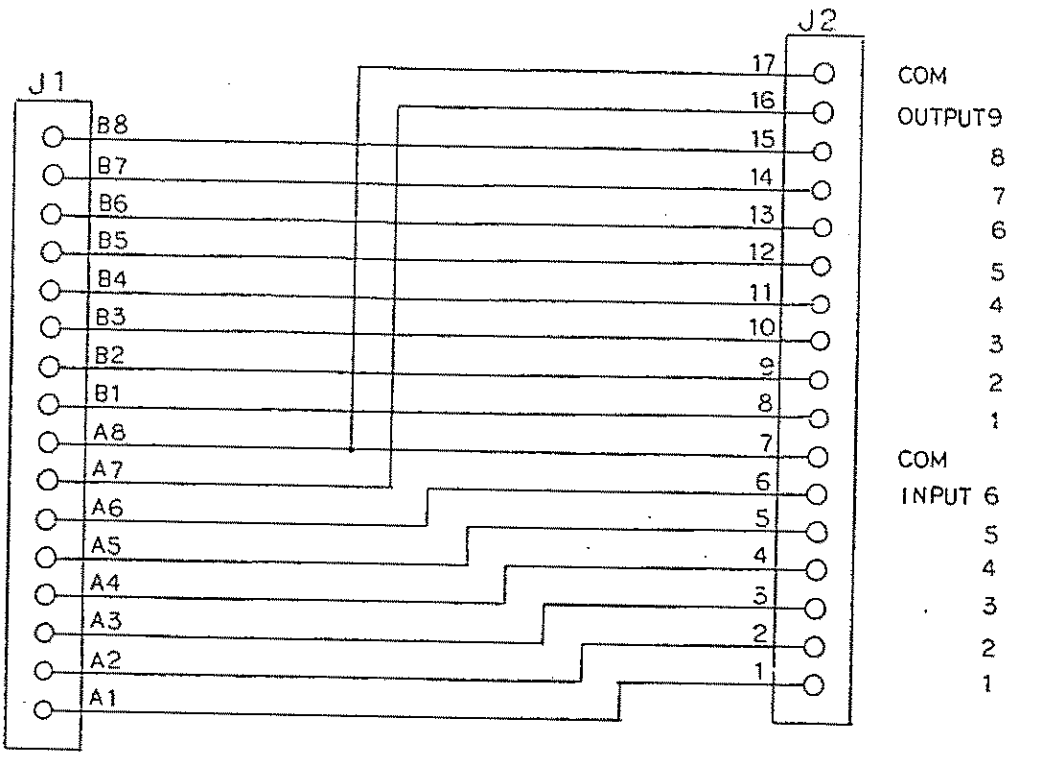

				Model	AD4325A/V
Symbol	Date	By	Revision No.	Description	TERMINAL BOARD
				Stock No.	PZ:2361
				Drwo.No.	

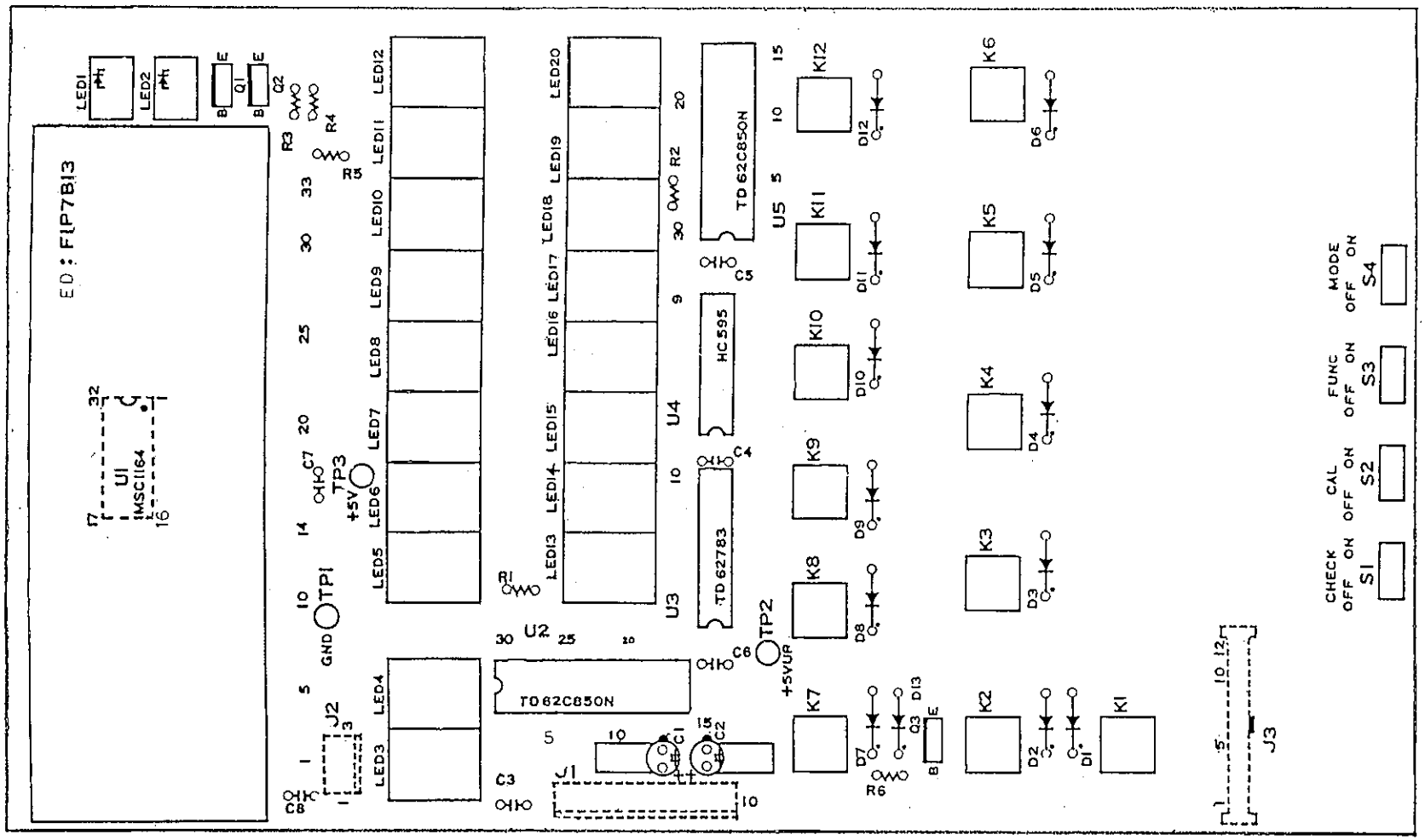

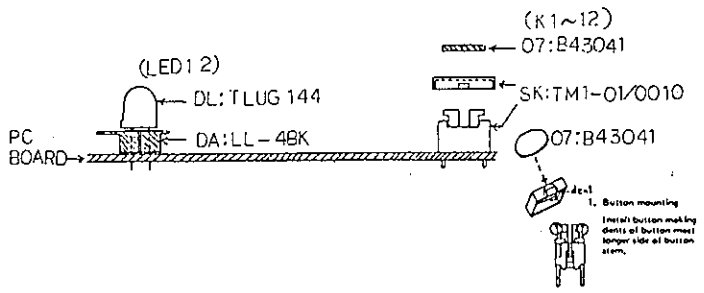

				Model	AD4325V
Symbol	Date	By	Revision No.	Description	DISPLAY BOARD
				Stock No.	PZ:2488
				Drwg.No.	KZ3-01000

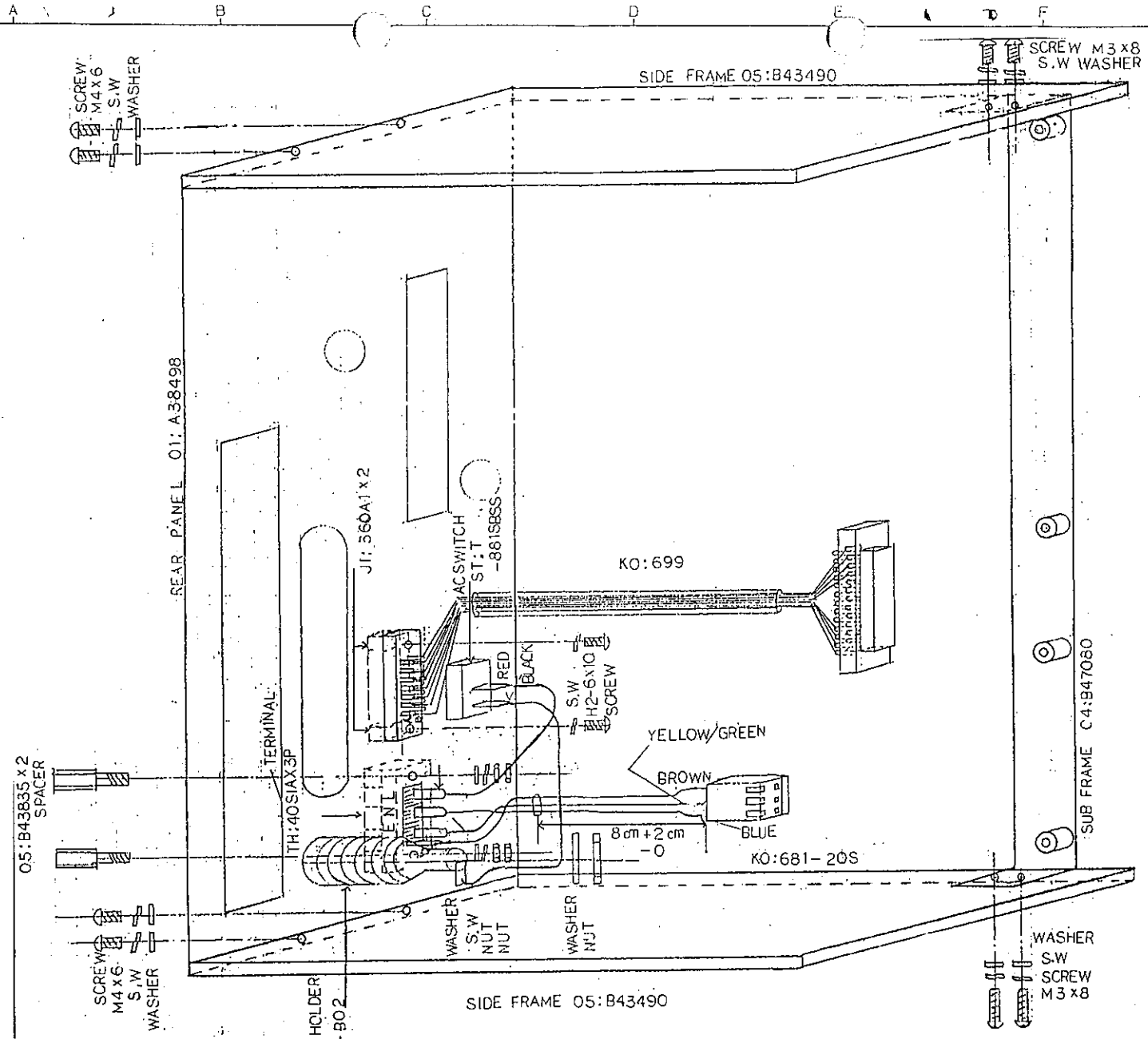

				Model	AD 4325V
Symbol	Date	By	Revision No.	Description	
				Stock No.	REAR PANEL
				Drwg.No.	KZ3-01001

E X P L O D E D V I E W

DRWG. NO.	PARTS NAME	DESCRIPTION	Q'TY
1	01:A38510A	KEY SHEET (ENGLISH)	1
(1)	01:A39292	KEY SHEET (MARCURY)	1
(1)	01:A38502	KEY SHEET (JAPANESE)	1
2	07:A45440	CAL LOCK SCREW	1
3	07:B47081-1A	BLANK PANEL	1
4	07:B42936	FILTER	1
5	07:B47082	FILTER B	1
6	07:A10171-1	FRONT FRAME	1
7	04:B47626	FRONT SETTER	1
8	04:B47080	SUB FRAME	2
9	05:B43490	SIDE FRAME	2
10	02:A38500	SIDE COVER	2
11	05:B44285	HEXAGON SCREW	2
12	04:A49263	BCD BLANK PANEL	1
13	02:A48921	ANALOG BLANK PANEL	1
14	04:A38498	REAR PANAL	1
15	04:B43493A	SLIDE RAIL	2
16	PZ:2488	DISPLAY BOARD	1
17	PZ:2323	MAIN BOARD	1
18	PZ:2077	ANALOG BOARD	1
19	PZ:2324	POWER SOURCE BOARD	1
20	PZ:2361	TERMINAL BOARD	1
21	JI:360A1	CONNECTER	1
22		M2.6 NUT	2
23	ST:T-881SBSS	POWER SWITCH	1
24	TM:40S1AX3P	TERMINAL BASE	1
25	05:43835	TERMINAL SPACE SCREW	2
26	FH:FH-B02	FUSE FOLDER	1
a		M3×6 PAN HEAD SCREW	4
b		M3×8 PAN HEAD SCREW	8
c		M4×8 PAN HEAD SCREW	8
d		M2.6×10 PAN HEAD SCREW	2
e		M4×10 TRUSS HEAD SCREW	1
f		M3×6 PAN HEAD SCREW	1
g		M2.6 E TYPE STOPPER	1
h		M3 WASHER	2
i		M3 CLAW WASHER	2
j		M2.6 WASHER	2
k		M3 NUT	8
l		M4 CLAW WASHER	4
m		M4 NYLON WASHER	1

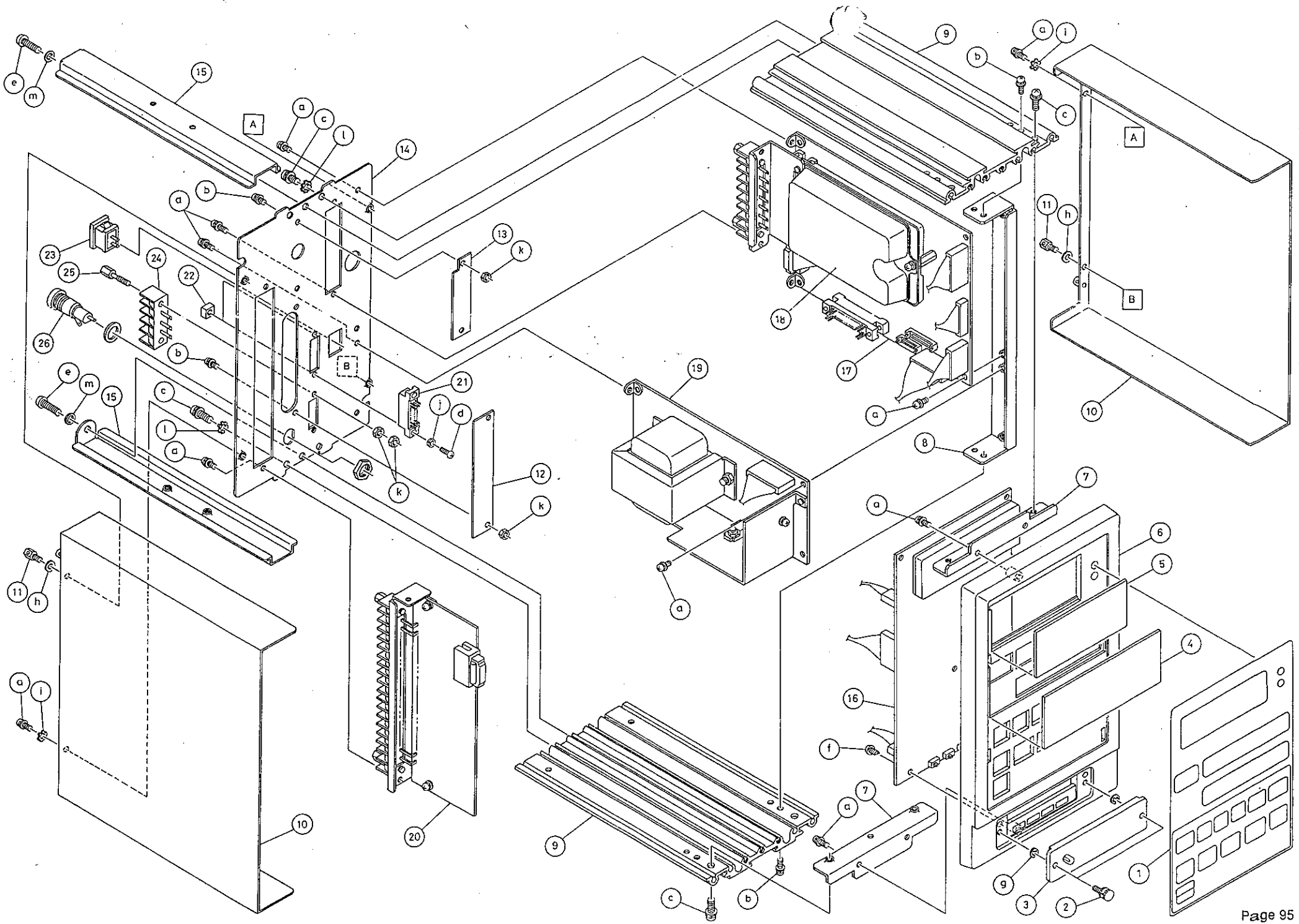

MEMORANDA

We hope that you have found this Instruction Manual useful and informative. If you have any suggestions for product improvement, found an error in this manual, or if you would like more information concerning this product, please don't hesitate to contact your nearest A&D office, or:

A&D Company, Limited
Daihatsu-Nissay Ikebukuro Bldg. 5F,3-23-14 Higashi-Ikebukuro,Toshima-ku,
Tokyo 170 Japan
TEL: (03) 5391-6123 FAX: (03) 5391-6129 Telex: 02422816AANDDJ

A&D Engineering, INC.
1555 McCandless Drive / Milpitas, CA 95035 U.S.A.
TEL: (408) 263-5333 FAX: (408) 263-0119

A&D Instruments GmbH
Lyoner Straße 36, D-6000 Frankfurt/Main 71, F.R. Germany
TEL: (069) 666-7006 FAX: (069) 666-6831

A&D Mercury PTY. LTD.
32 Dew Street, Thebarton, South Australia 5031 Australia
TEL: (08) 352-3033 FAX: (08) 352-7409

A&D KOREA LIMITED
3rd Floor Hanam Bldg 44-27 Yoido-dong Yungdeungpo-ku Seoul, Korea
TEL: (02) 784-4264 FAX: (02) 784-6557