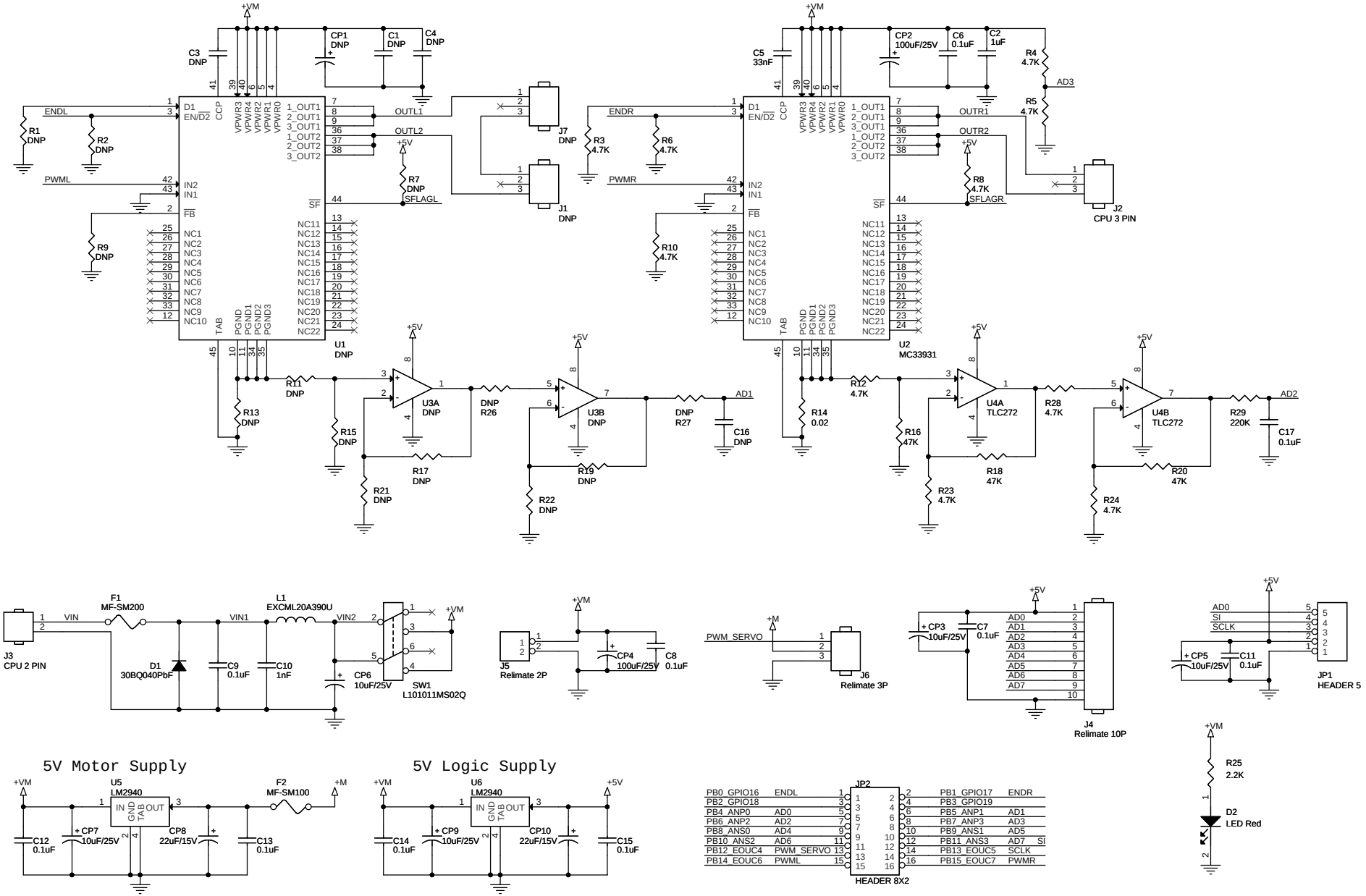

Title	MOTOR DRIVE		
Size A3	Document Number <Doc>		Rev A
Date: Saturday, May 21, 2011	Sheet 1 of 1		