Entry

Premium

Short Description

ARS 404-21 (Entry)

+

ARS 408-21 (Premium)

Long Range Radar Sensor

77 GHz

Technical Data

Version 1.04 en

Author:	**Roland Liebske**
Document no.:	**2016_10_19-04**
Draft date:	**16.02.2016**
Amendment date:	**15.05.2017**
Drafted at:	**D-88131 Lindau**
	Peter-Dornier-Straße 10

Table of Contents

1. OVERVIEW 4

1.1 IMPORTANT INFORMATION 4
1.2 FEATURE OVERVIEW 5
1.3 APPLICATION EXAMPLES 6
1.4 RADAR PRINCIPLE 6
1.5 ANTENNA PRINCIPLE 7
1.6 DEVICE DATA 8
1.7 TECHNICAL DATA 9
1.8 PRODUCT IDENTIFICATION 9

2. DEVICE SETTINGS 10

2.1 CONNECTION 10
2.2 CONFIGURATION AND STARTUP/SHUTDOWN/FAILURE BEHAVIOR 10

3. INSTALLATION AND MOUNTING SPECIFICATION 11

3.1 SENSOR COORDINATE SYSTEM 11
3.2 LOCATION MOUNTING EXAMPLE 11
3.3 ANGULAR MOUNTING TOLERANCES 12
3.4 SECONDARY SURFACE (RADOME) 12
3.5 SECONDARY SURFACE – DISTANCE AND ANGLE 13
3.6 SECONDARY SURFACE – MATERIAL PROPERTIES 13
3.7 SECONDARY SURFACE – THICKNESS AND CURVATURE 14
3.8 SECONDARY SURFACE – PAINTING 16
3.9 SECONDARY SURFACE – ATTENUATION 17
3.10 SENSOR VEHICLE FIXATION 17
3.11 SENSOR RADIATION CONE 17
3.12 ADDITIONAL REQUIREMENTS FOR THE RADIATION CONE 19
3.13 VEHICLE ENVIRONMENT 20
3.13.1 OPERATION TEMPERATURE RANGE 20
3.13.2 MECHANICAL VIBRATIONS 21
3.14 ALIGNMENT 22
3.14.1 MANUAL ALIGNMENT METHOD 22

4. ELECTRICAL CONDITIONS 25

4.1 CABLE CONNECTION AND FUSE PROTECTION 25
4.1.1 CAN bus 25

5. MUTUAL INTERFERENCE 26

6. INFLUENCE ON HUMAN HEALTH 27

7. TECHNICAL DATA 28

7.1 FIELD OF VIEW (FOV) - BEAM PATTERN 30

8. CONNECTIONS 34

8.1 CONNECTION CONFIGURATION 34
8.2 CABLE CONFIGURATION ARS 404-21 38
8.3 CABLE CONFIGURATION ARS 408-21 39

9. INTERFACES 40

9.1 CAN INTERFACE (ARS 404-21 AND ARS 408-21) 40
9.2 INPUT SIGNALS 41
9.2.1 Possible Dynamic Parameters 41

10. DEVICE DIMENSIONS 42

10.1 DIMENSIONS ARS 404-21 42
10.2 DIMENSIONS ARS 408-21 43

11. LABEL / MARKING 44

12. NOTES ON SAFETY AND RISKS 46

12.1 AREAS OF RESPONSIBILITY 46
12.2 OPERATING RISKS 47
12.3 ELECTROMAGNETIC COMPATIBILITY 49
12.4 MAINTENANCE AND CARE 49
12.5 SERVICE 49
12.6 APPROVAL 49
12.7 ADDITIONAL INFORMATION 50

ARS 404-21 Entry and ARS 408-21 Premium - Short Description

1. Overview

1.1 Important information

Please Note! Power Limitation for South-Korea and Japan!
For South-Korea and Japan the transmitting power could have a special limitation with 3 dB less transmitting power, which we will reduce for all ARS 408-21 radars in our plant only for deliveries to South-Korea and Japan. All customers in other countries are not allowed to buy the radars with standard transmitting power and sell it to South-Korea or Japan. Please ask us to modify radars ARS 408-21 for South-Korea or Japan before you will order and resell it to South-Korea or Japan.

Contact:
Mr. Peter Schmok, phone +49-8382-9699-101,
mail to: peter.schmok@continental-corporation.com

This short description must be read thoroughly before the device is connected up or put into operation. Dangerous situations may arise otherwise.

This short description is a standard description of most important technical data of the 77 GHz Long Range Radar Sensors manufactured by A.D.C. GmbH, referred to hereafter as the ARS 404 and ARS 408.
Although plant and customer-specific deviations are possible, this documentation does not go into any further details.

All rights reserved by A.D.C. GmbH. No part of this short description may be reproduced and / or processed, copied or distributed using electronic systems, in any form whatsoever, without the express written permission of A.D.C. GmbH.
All due care was taken when preparing this short description. A.D.C. GmbH shall assume no liability whatsoever for any mistakes or omissions.

A.D.C. GmbH shall assume no liability for injury to persons or damage to property caused by failure to comply with this short description or through improper usage of the device. All warranty claims shall also become void.

Arbitrary reconstruction and/or modification of the device is not permitted for warranty, safety and CE approval-related reasons. In such cases, dangerous situations could arise and all guarantee claims shall become void.

In this description solely it is a matter to devices of generation 4 (G4).

We reserve the right to make technical modifications or to amend the delivery specifications.

Please contact your supplier if it should become necessary to check the technical functions or to repair the device.

Please retain the original packaging in order to protect the ARS 404 and ARS 408 against transport damage.

ARS 404-21 Entry and ARS 408-21 Premium - Short Description

This document describes, in accordance with latest development status, the 77 GHz Long Range Radar Sensors ARS 404 and ARS 408 manufactured by A.D.C. GmbH. The document does not claim to cover all the possible applications or deployment areas for these devices. It is amended, corrected and enhanced as approved editions in keeping with development progress. Ensuing new versions are assigned an incremental index number (as underlined in the example below):

Example: 2016_10_19-04 (04 = index number)

The contents of the latest released version are binding and make all preceding versions obsolete.

1.2 Feature overview

The ARS 404 and ARS 408 is a 77 GHz radar sensor with digital beam-forming scanning antenna which offers two independent scans for far and short range.

ARS 404 and ARS 408 radar systems provides following features:

- Simultaneous detection of multiple stationary and moving objects with relative speed of -400 to 200 km/h
  - Determination of advanced object attributes like RCS, geometry and orientation (RCS = Radar Cross Section – value for reflectivity)
  - Classification of moving objects as vehicle, motorbike, bicycle or pedestrian
- Dual scan provides detections in far range (up to 170 resp. 250 m) and extended field of view (FoV) in short range with high range resolution
- Configurable output of up to 250 raw detections (untracked clusters) or 100 tracked objects (tracks) via CAN bus
  - Optional filtering and sorting of object list based on object attributes
- Collision warnings with up to eight regions of interest that can be defined via CAN bus
- Usage both on stationary and moving platform with optional input of sensor speed and yaw rate
- Scalable family approach with different control interface options
- Internal processing unit for additional software functionality on customer request
  - Sensors designed to host sensor fusion (RAM, ROM, runtime) with other sensors (e.g. camera)
- Reduced cost and size to 3rd generation radar sensor ARS 30X
  - Higher level of integration
  - No moving parts
- ARS404 and ARS 408 will be comply with the applicable frequency regulation standards in the following regions/countries:
  - European Union
  - USA
  - Canada
  - Russia
  - South Korea
  - Australia
  - Japan and further countries

- Compliant with UN/ECE electromagnetic compatibility regulations R 10 (2) External

1.3 Application examples

ARS 404 and ARS 408 are suitable for various industrial and automotive applications that are realized on beam-based sensor concepts.

- Distance Monitoring/Warning
  Distance monitoring with warning message if the distance to the preceding object is too close.
- Detection and tracking of people, vehicles, animals and equipment for collision avoidance in industrial, construction, agricultural and mining applications
- Monitoring of automated manufacturing processes
- Condition monitoring of industrial plants
- Traffic monitoring for traffic management and safety applications with ability to distinguish objects on different lanes
- Monitoring and protection of vehicle and pedestrians on railway and passenger crossing

The High Sensitivity (HS resp. high SNR) and High Resolution of the sensor ensures a safe detection of preceding vehicles and also allows detection of targets in front of the preceding vehicle (by underbody reflections) even if the line of sight is covered.

Furthermore the scanning antenna of ARS 404 and ARS 408 with its relatively large aperture width allows estimation of object width and length by internal processing means applied to the measured data. Based on this functionality a classification of the measured targets is carried out.

1.4 Radar principle

The ARS 404 and ARS 408 uses a pulse compression radar modulation scheme as basic principle for its measurements. This technique avoids the drawbacks of both the classical Pulse-Doppler and the FMCW (Frequency Modulated Continuous Wave) approach. Compared with a Pulse-Doppler principle, due to a very large duty cycle the chirped radar works with significantly higher amplitude of RF energy, resulting in a better overall SNR (Signal to Noise Ratio).

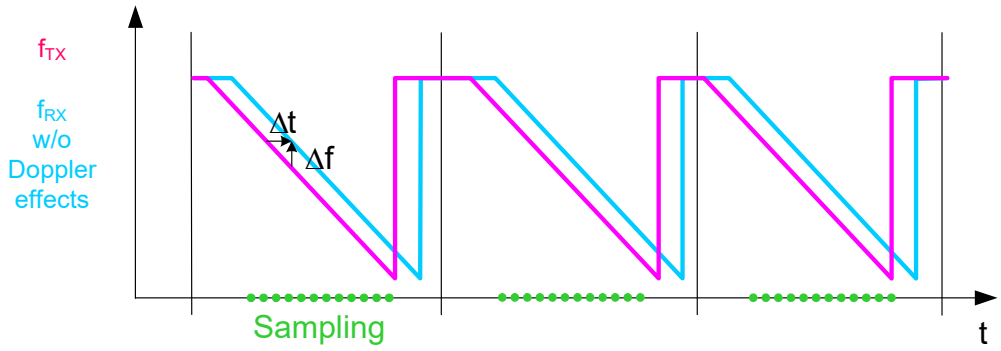

Figure 1: ARS 40X Radar Principle

Compared with FMCW, it is rather easy to separate range and velocity information in the received signals, because these are mapped to a 2-dimensional frequency range by three succeeding FFTs (Fast Fourier Transformation)-, that are calculated in the processing unit of the sensor.

Due to the applied processing procedure sampling out the individual chirps and processing accordingly, this radar principle is sometimes also referred to as pulse compression radar.

Another benefit of the radar principle is a software adjustable range resolution and maximum distance. The sensor is capable to setting its range resolution from 1m and more up to 0.25 m, which can be done externally via CAN interface. This functionality is achieved by varying the frequency sweep of the chirps. The distance can be configured via CAN interface once for one single system cycle.

1.5 Antenna principle

Figure 2 shows the antenna principle of digital beam forming used for ARS 404 and ARS 408. In the example one transmitting (TX) antenna and four receiving (RX) antennas are used. Two (TX) antennas and three (RX) antennas for ARS 404 and 2x6 (RX) antennas for ARS 408 are used. All (Rx) antennas receive reflections from the same target (ideally) not different in amplitude but in phase due to the slightly different distances to the target as a function of the azimuth angle α_{AZ}.

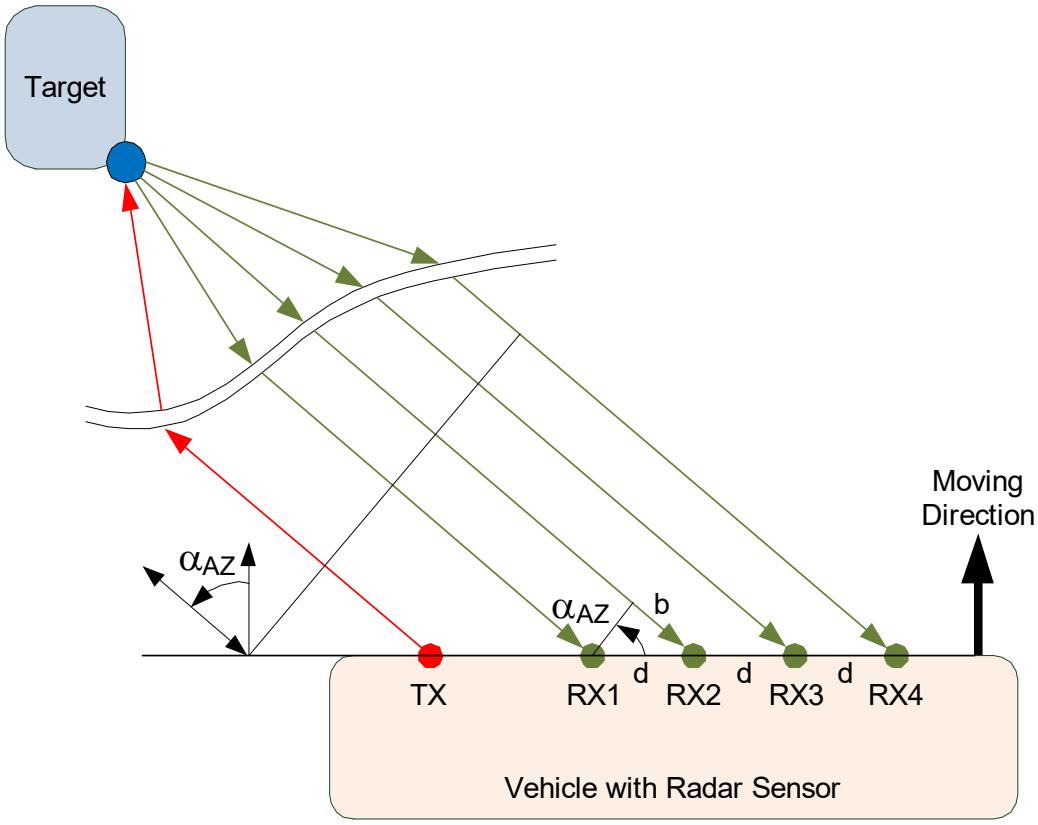

Figure 2: ARS 404 and ARS 408 Antenna Principle

ARS 404-21 Entry and ARS 408-21 Premium - Short Description

For ARS 404 the antennas 2 TX and 2 RX are used for a single range scan for near range and 2 TX and 1 RX*+2 RX** for far range object detection (*1 RX = double column = higher bundeling; **2 RX from near range). Selecting near range and far range scan is done via digital beam forming.

For ARS 408 the antenna patch contains 2 TX and 6 RX antennas for near range and 2 TX and 6 RX antennas for far range scan. Selecting near range and far range scan is done via selecting different frequency chirps and is done serially alternating between near and far range. During one measurement cycle one far range scan of ± 9° with a distance range of 0.25 - 250 m and one near range scan of ± 60° with a distance range of 0.25 - 70 m resp. max. 100 m is done.

1.6 Device data

The ARS 404 and ARS 408 are 77 GHz long range radar sensors that have been specially designed by A.D.C. GmbH for deployment in automotive applications. Its purpose is the contact-free measurement of distance, speed and position by using digital formed beams with a F.o.V. (Field of View) of up to ±45° in near range for ARS 404 and up to ±60° in near range for ARS 408 and up to ±9° in far range for ARS 404 and ARS 408. The ARS 404 and ARS 408 are typically mounted behind a secondary plastic surface (radome).

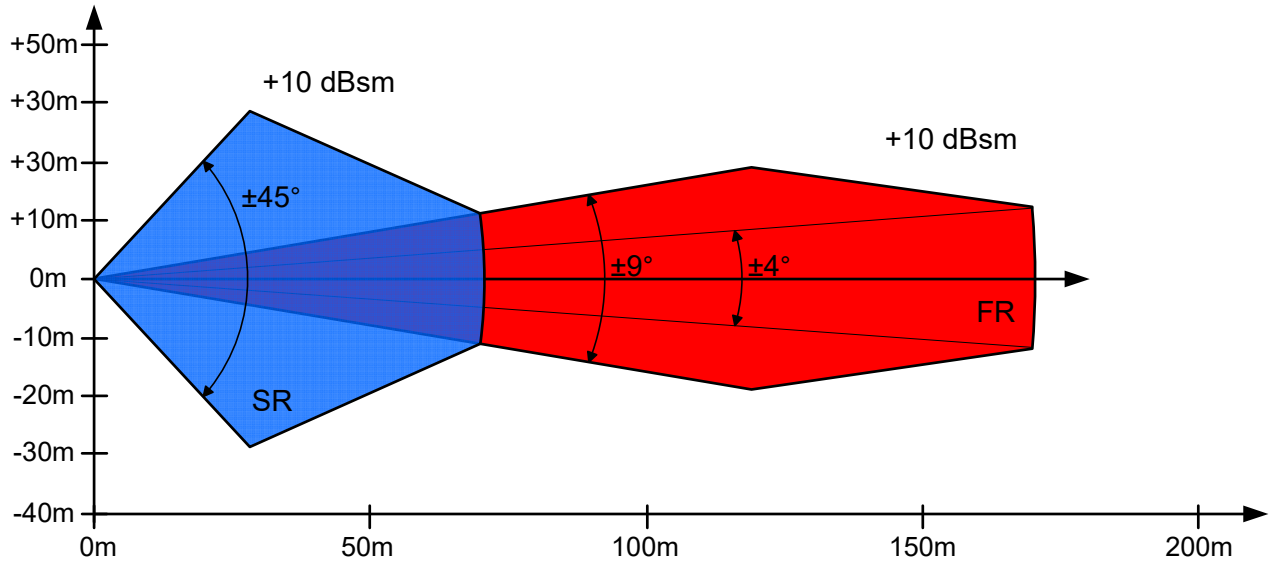

Figure 3: F.o.V. Field of View of ARS 404

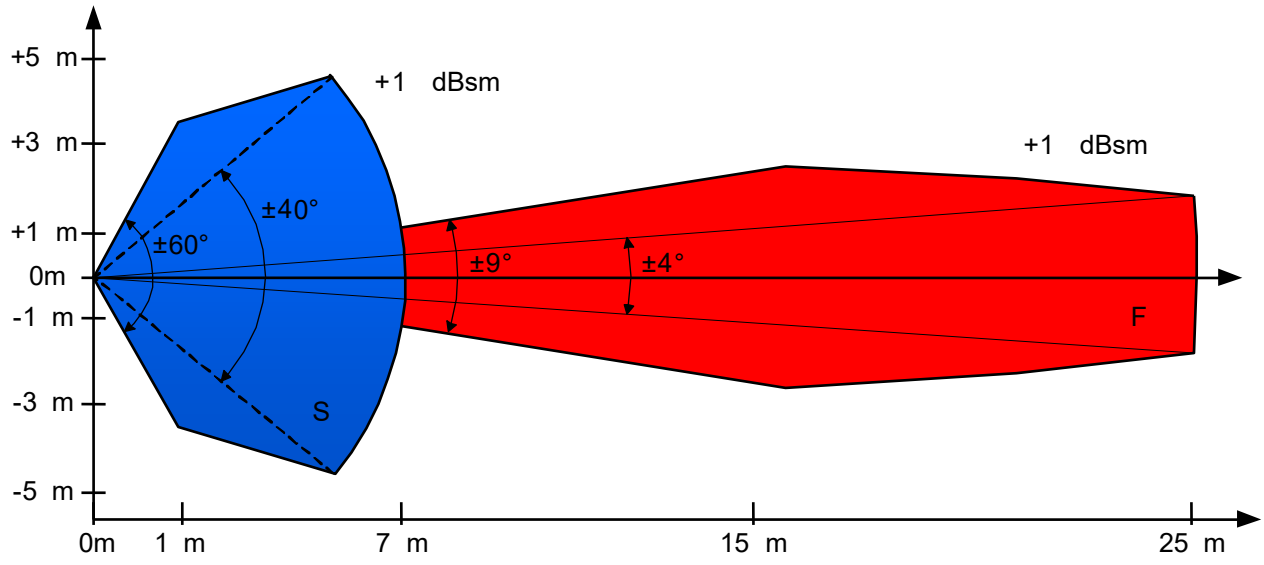

Figure 4: F.o.V. Field of View of ARS 408

1.7 Technical data

The necessary device data are described in chapter 4 and also in the ARS 404 and ARS 408 data sheets, which can be downloaded from www.continental-automotive.com/industrial-sensors

1.8 Product identification

Exact specifications for the product are given on the laser marking on the cover of the device:

Version (name to order)	Remarks	Device type and article no.:
ARS 404-21 Entry Combined functionality (8 ID's, 8 collision avoidance regions, sensitivity, 0 – 170 m)	Sensor ARS 404-21 special version Entry (setting of Sensitivity, Tracks, Cluster, ID's, Collision Avoidance Regions individually)	ARS 404-21 Article no.: 10.005.310-00
ARS 408-21 Premium Combined functionality (8 ID's, 8 collision avoidance regions, sensitivity, 0 – 250 m)	Sensor ARS 408-21 special version Premium (setting of Sensitivity, Tracks, Cluster, ID's, Collision Avoidance Regions individually)	ARS 408-21 Article no.: 10.005.300-00
Cable ARS 404 5 m Power Supply and CAN bus	5 m cable with connector for ARS 404 CAN bus and Power Supply	5 m cable ARS 404 Article no.:10.005.321-00

Connector ARS 404 (Power Supply, CAN bus)	6 pin connector for ARS 404 CAN bus and Power Supply without sealing, Würth WR-MPC3 black	Connector ARS 404 Article no.:10.005.331-00
Cable ARS 408 5 m Power Supply and CAN bus	5 m cable with connector for ARS 408 CAN bus and Power Supply	5 m cable ARS 408 Article no.:10.005.320-00
Connector ARS 408 (Power Supply, CAN bus)	8 pin connector for ARS 408 CAN bus and Power Supply AMP waterproof vehicle version, Tyco MQS BU-GEH KPL 8P	Connector ARS 408 Article no.:10.005.330-00

2. Device Settings

2.1 Connection

In order to check the ARS 404 or ARS 408 or put it into operation, the ARS 404 or ARS 408 must be connected to a power supply. The ARS 404 or ARS 408 must also be connected to a PC or notebook via CAN bus and a separate and suitable interface converter CAN/USB – by example PCAN from company Peak-Systems or CanAlyzer from company Vector or better by using the Continental Radar PLC.

2.2 Configuration and Startup/Shutdown/Failure Behavior

Having connected the ARS 404 or ARS 408, the device needs to be configured by taking the data protocol as described in the separate Technical Documentation ARS 404-21 and ARS 408-21 for the CAN protocol.

The time from physically powering up the device and ramping the power supply of the microcontroller shall be ≤ 20ms.

The time from physically powering up the device until output of default data (signal not available - SNA) on the communication interface shall be ≤ 400 ms.

The time from physically powering up the device until all output signals are available on the communication interface shall be ≤ 1000ms.

The sensor is hot unplugging capable.

All internally detected errors may lead to functional restriction. Critical error will lead to a sensor reset.

3. Installation and Mounting Specification

3.1 Sensor Coordinate System

The sensor coordinate system is defined according to Figure 5. The sensor shall be mounted with the plug pointing to the left, seen from behind (towards the positive y-axis). The output position of the untracked clusters is given in range and angle, while the output position of the tracked objects is given in x and y coordinates.

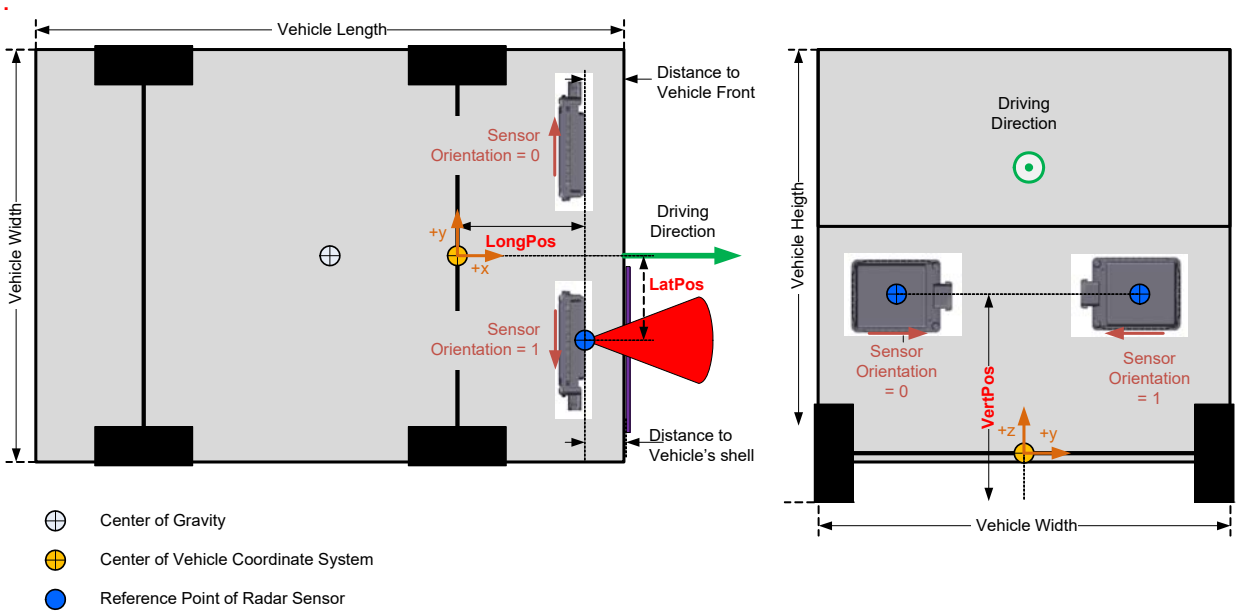

Figure 5: Sensor Coordinate System ARS 404 and ARS 408

3.2 Location Mounting Example

The location mounting example (here e.g. for a vehicle) includes a description of horizontal and vertical position of the sensor location (reference point) compared to the vehicle axis as summarized in Figure 6.

Limits of horizontal deviation based on vehicle axis (LatPos):

- Up to 600 mm out of vehicle center
- From 600 mm to 900 mm out of vehicle center

Limits of vertically deviation from road surface (VertCenter + VertPos):

- From 295 mm to 800 mm above road-surface level
- From 800 mm to 1000 mm above road-surface level

Notes:

- Values measured from sensor center

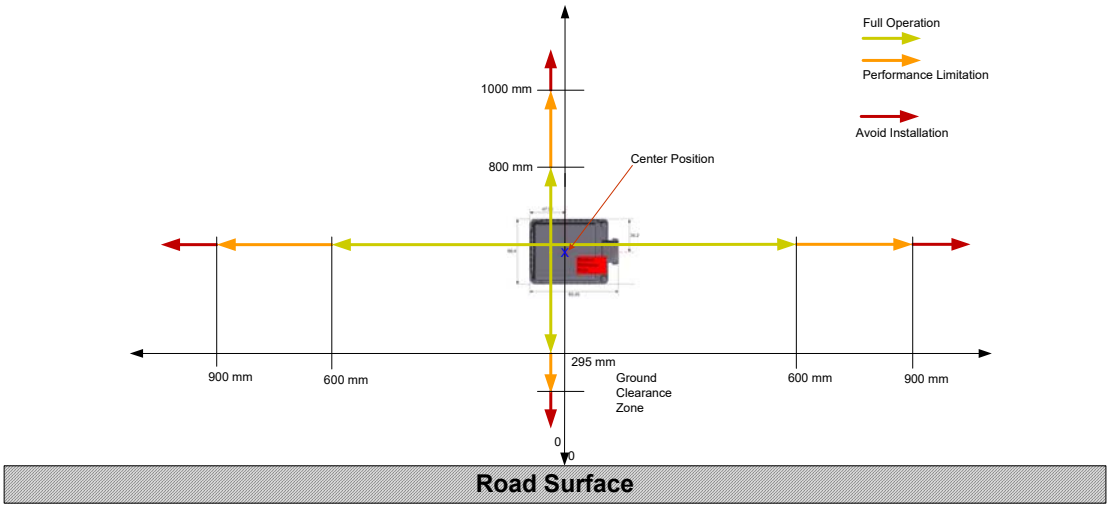

Figure 6: Mounting / Installation Location ARS 404 and ARS 408

3.3 Angular Mounting Tolerances

The mechanical mounting tolerances include the **sum** of the following contributions:

- Drive axis-vehicle body
- Possible mounting bracket sensor
- Change of loading condition (e.g. empty/full trunk)

The better the accuracy of drive axis-vehicle body the more mounting margin is available for the other contributions.

Misalignment consist of

- Misalignment by wrong or bad mounting
- Changes over lifetime
- Loading

3.4 Secondary Surface (Radome)

Between the sensor and the exterior e.g. of the vehicle, a secondary surface (radome) can be installed to protect the sensor from environment and direct visibility.

The position and orientation of the ARS404 and ARS 408 system in relation to the cover plate cannot generally be specified, but has to be evaluated individually.

Configuration for optimum system performance depends on:

- Thickness
- Material
- Form
- Distance
- Homogeneity
- Tilt of the secondary surface

3.5 Secondary Surface – Distance and Angle

According to the mounting position of the sensor for a specific platform, the distance between the sensor front cover and the secondary surface shall be designed large enough to avoid mechanical interferences, caused by thermal geometry changes or mechanical stress (e.g. vibrations).

In addition to that, the distance to the secondary surface shall be large enough to avoid development of a constant water film or snow or mud cover. Because of a small antenna aperture the ARS404 variant Continental recommends a minimum distance of 20 mm and the ARS 408 variant Continental recommends a minimum distance of 10 mm to the secondary surface, if the sensor is accessible by rain, snow, mud etc. indirectly.

The angle between sensor and secondary surface is designated as tilt angle.

Small tilt angle could introduce multipath reflection between sensor and secondary surface and might increase noise level, reduce non-ambiguous angle area and might cause ghost object issues.

Higher tilt angle increases the effective thickness and therefore increases damping due to material losses, reduces non-ambiguous angle area and might cause ghost object issues.

For maximum performance the tilt angle shall be $10° < x < 30°$.

Generally the nominal thickness of cover material should be selected according to the minimum loss for the tilt angle.

The combination of large tilt angles and large distance to the secondary surface has to be considered with special attention.

- Multipath propagation e.g. between a possible mounting bracket of the radar and the secondary surface or between structures behind the radar and the secondary surface, can result in ghost targets, higher sidelobes or inaccurate angular measurement.

3.6 Secondary Surface – Material Properties

Material properties given by manufacturer normally refer to frequencies in MHz-range and below. For higher frequencies the material properties differ intensely from data sheets.

The roughness of the material should be below lambda/10 (~400 um).

Materials used as structure for the bumper/ secondary surface shall have following properties:

- Synthetic materials with low dielectric loss factors at the specific radar frequency shall be used in order to achieve low transition damping.
- Synthetic materials with low dielectric constants (ε_r) shall be used in order to obtain low surface reflection.

A possible synthetic material that has been approved for usage which is commonly used is ABS, among others. Other possible materials are shown in the Table 1.

ARS 404-21 Entry and ARS 408-21 Premium - Short Description

Material	Dielectric Constant (ε_r) @ 77 GHz
Polypropylene	2.35
Polyamide	2.75
Polycarbonate	2.8
PC-PBT(Polycarbonate Type)	2.9
ABS (Acrylnitril-Butadien-Styrol)	3.12
ASA (Acrylonitrile Styrene Acrylate)	~3.8
PMMA (Poly Methyl Methacrylate)	~3-4 TBC

Table 1: Dielectric Constant and optimal thickness of common bumper materials @ 77 GHz

Material	thickness of 1.optimum (mm)**	thickness of 2.optimum (mm)**	thickness of 3.optimum (mm)**	thickness of 4.optimum (mm)**	attenuation(dB) for 2. Optimum at 77 GHz	real permittivity Er*	applicability	Lambda/2 free air for 77 GHz	
Polypropylene	1,28	2,55	3,83	5,10	0,10	2,33	best	1,948051948	mm
ABS	1,19	2,39	3,58	4,77	0,30	2,7	ok		
Polyamide	1,18	2,36	3,54	4,72	0,30	2,73	ok		
Polycarbonate	1,16	2,33	3,49	4,66	0,17	2,8	ok		
SMC	0,88	1,77	2,65	3,54	1,10	4,85	no		

*Numbers for permittivity might vary depending on manufacturer and chemical composition. Therefore calculated numbers for thickness have to be verified by measurement

**Calculated numbers for thickness only apply for incident angle of secondary surface of 0 degree.

Table 2: Thickness, Attenuation, Permittivity of possible radome materials

Based on experience it is important to note, that the actual properties of a certain material may also differ from supplier to supplier according to the used composition or density. Therefore, all values for the dielectric constant given in the paragraph can only be used as a guideline.

3.7 Secondary Surface – Thickness and Curvature

To achieve high permeability, the overall thickness of the secondary surface has to be carefully selected. A multiple of half of the effective wavelength within the material would be appropriate. E.g. for the case of ABS material (εr = 3.12) any value of n* 1.1 mm (@77 GHz, n=1,2,..) is favorable. Whereby with raising thickness the attenuation is increasing.

The given formula given above is only applicable for small to medium tilt angles (approx. up to 30°) of the secondary surface against the sensor front.

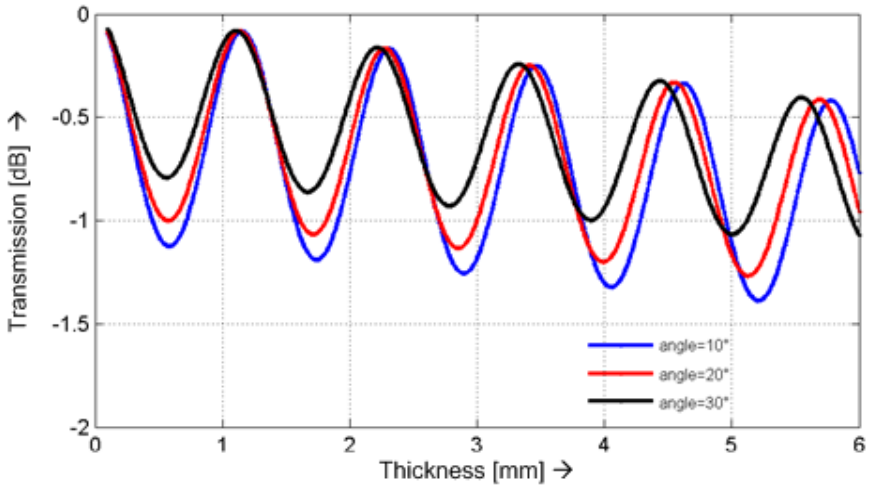

Figure 7: Attenuation in dependency of material thickness and tilt angles

To prevent distortion of the radar beams, the secondary surface shall be as planar as possible while providing constant thickness. Smaller curvature radius results in higher effects to the radar beam.

To prevent distortions of the radar beam, the curvature of the secondary surface shall not contain ribbed profiles, sharp edges or abrupt thickness changes.

The following Figure 8 provide a general impression of favorable boundary conditions.

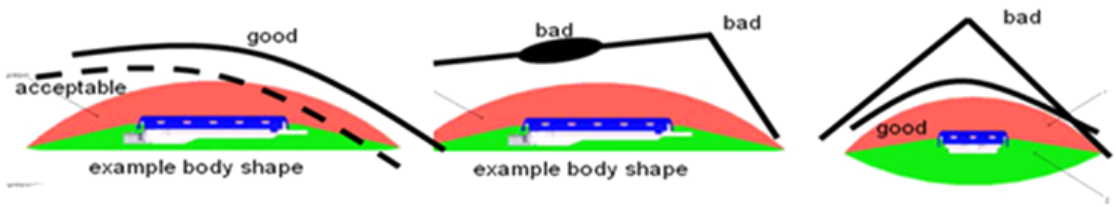

Figure 8: Boundary Conditions

Any specific geometry of the secondary surface including the mounting structure of the radar sensor shall be provided from an expert in order to evaluate impact on functionality and performance of the sensor. Worst case, radar measurements needs to be performed.

3.8 Secondary Surface – Painting

The secondary surface (radome) can in principle be painted but a dedicated analysis and control of the different possible categories of paintings is mandatory to avoid significant performance degradation.

In general the secondary surface will carry several layers of primer, paint and varnishes. These layers in combination with the structure material will influence both surface reflection properties and the transmission damping. All kinds of metallic materials prevent respectively degrade sensor radiation and shall not be used as a second surface.

Elements containing metallic particles must be verified. The applicability of metallic paintings is dependent on

- The metal content (percentage) in the painting
- The size and shape of the metal particles in the painting
- Number and thicknesses of different layers of paintings and primers

The number of painting layers shall not exceed four, considering the maximum one-way attenuation.

A summary of all known mechanical design guidelines for painting and structure of the secondary surface is shown in Table 3.

Factor	GO	NO GO	Performance Degradation
Area	No interference within illuminated FoV (no clips, screws, metal parts	Metalic parts inside the FoV	Minor interferences in the outer border of the desired area; dielectric interferences within border of FoV; interferences have to be agreed by Continental
Material	Approved material	All other materials needs to be confirmed by Continental	Non approved materials has to be confirmed by Continental
Thickness	Constant thickness over whole structure as specified	Thickness deviations which leads in combination with material constants to higher attenuations than specified	Minor deviations for desired thickness leeds to reduced reach.
Paint/Color radome	No paint/color	Non-approved paint or varnish	If approved color is used, must specify one layer A side only and Charater Line requirements fully met.
Paint/Color bumber Function EBA	Up to 4 layers if attenuation is within spec	Violation of max. attenuation	
Holes		X	
Characterlines - Vertical	<= 1.0mm if w/o paint	Limits to be clarified	Characterlines are possible if overall thickness is constant. E.g if characterline is extruded to front, inner side of radome has to be intruded to keep thickness constant. Limit of size has to be approved.
Characterlines - Horizontal	<= 1.0mm if w/o paint	Limits to be clarified	Characterlines are possible if overall thickness is constant. E.g if characterline is extruded to front, inner side of radome has to be intruded to keep thickness constant. Limit of size has to be approved.
Characterlines - Curvature	> 320mm based on Continental experience from many application projects	Limits to be clarified	Limits to be clarified
Overall Surface Structure	See specification	Major deviations from specification	Minor deviations from specification
Angle between Sensor/Radome	10°<x<30°	>30°	<10°; the better the radome the smaller possible tilt angle
Distance	>=20mm (exposed environment)	to small distance or violation of radarcone	depends on radarcone and radome performance

Table 3: Requirement for Secondary Surface

3.9 Secondary Surface – Attenuation

The maximum attenuation of the combined secondary surface (cover plate including paint) depends on required function:

- To provide special automotive functionality:
  - One-way attenuation shall not exceed 4.0 dB
  - Max. reflection coefficient shall not exceed -2.2 dB
- To provide special automotive functionality (ARS 404-21 up to 170km/h; ARS 408-21 up to 200km/h):
  - One-way attenuation shall not exceed 2dB

3.10 Sensor Vehicle Fixation

The customer shall fulfill a set of requirements with regard to assembly and secondary surface structure properties to ensure maximum sensor performance.

The ARS404 and ARS 408 sensor provides fixed screwing points for mounting to a metal frame.

Sensor unit fixation to the vehicle shall not create deformation of housing. The locking torque shall not exceed 7 Nm.

The sensor mounting interface elements (e.g. screws) shall be released to fulfill mechanical and electro-chemical (e.g. contact voltage) matching.

3.11 Sensor Radiation Cone

For a proper sensor performance the area in front of the sensor antenna radiation cone needs to be kept free of any materials or objects that may disturb the radar function.

The radiation cone will be supplied to the customer by A.D.C. GmbH. The radiation cone shall not be violated of any metallic parts.

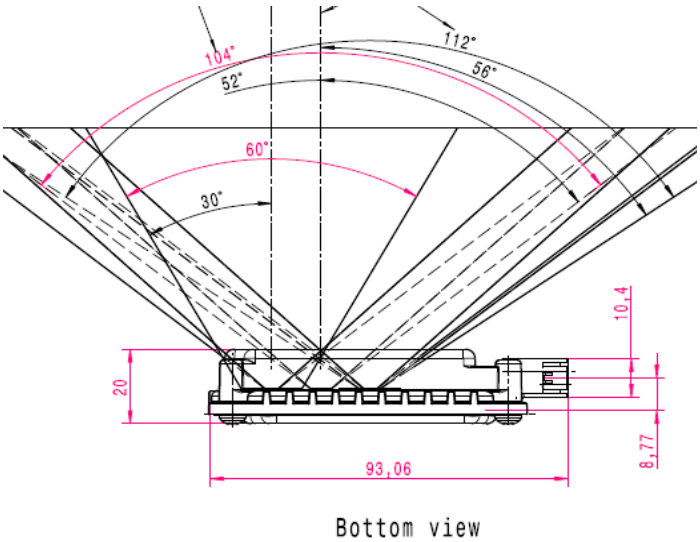

Figure 9: Radarcone ARS 404 – Azimuth FoV

ARS 404-21 Entry and ARS 408-21 Premium - Short Description

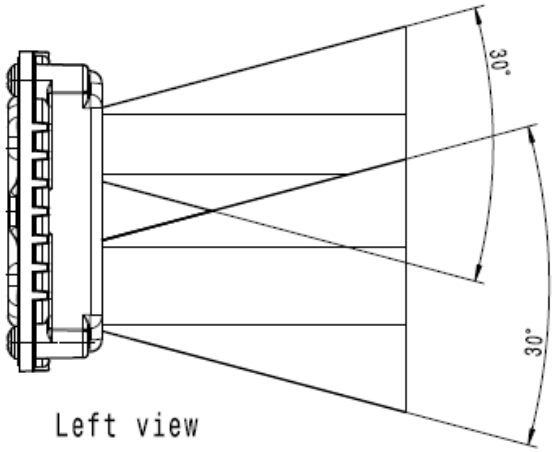

Figure 10: Radarcone ARS 404 – Elevation FoV

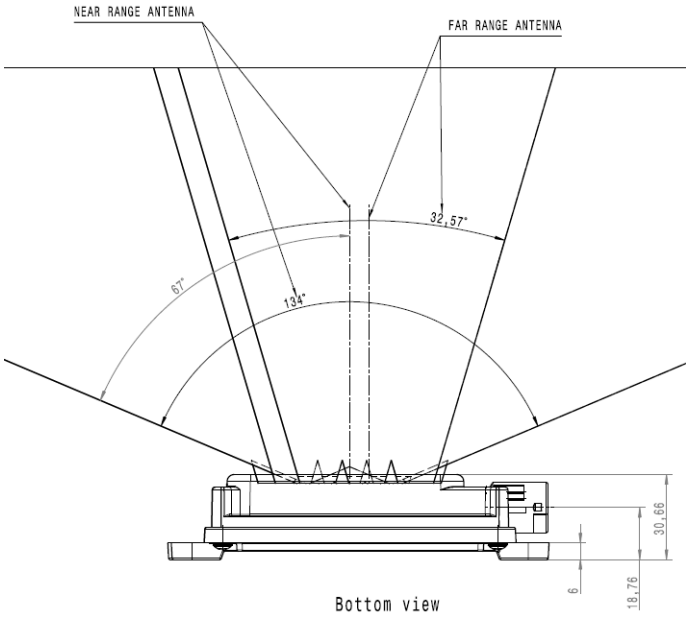

Figure 11: Radarcone ARS 408 – Azimuth FoV

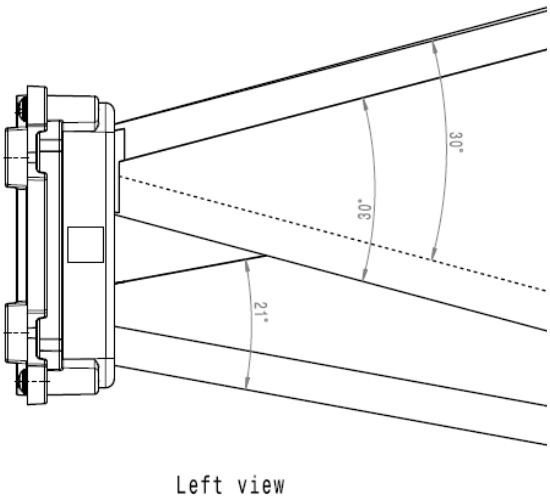

Figure 12: Radarcone ARS 408 – Elevation FoV

3.12 Additional Requirements for the Radiation Cone

In addition, areas around the sensor radiation cone have to be taken into account according to the following Figure 13.

Figure 13: Keep-Out Zone

Legend for details of the keep-out zone:

- Red zone: "MUST" Keep Out Zone
- Yellow zone: Verification Zone (verification necessary)

Additional explanations for Yellow Zone requirements:

- Yellow Zone has to be considered due to unwanted propagations paths. Unwanted incident paths are reflections from positions aside the sensor direct into the sensor or from aside the sensor to the secondary surface and back to the sensor.

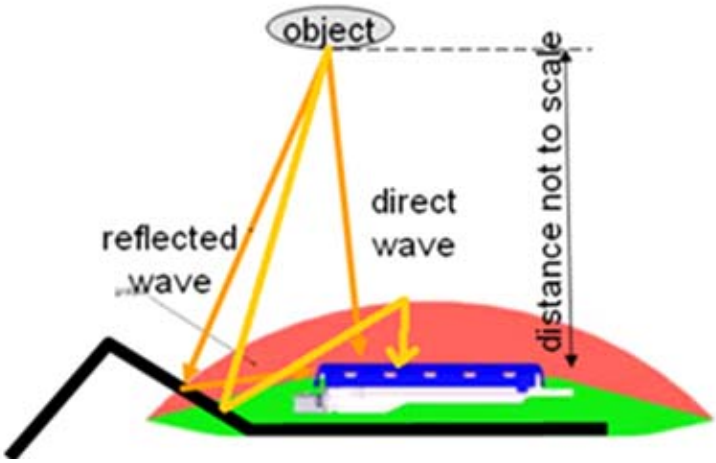

Figure 14: Influences of reflections from close-by surfaces

The Radar Cone impinges the Radom/Secondary Surface. Due to the opening angle of the cone, the area which is impinged increases with increasing distance to the radar sensor.

3.13 Vehicle Environment

The qualification of the ARS404 and ARS 408 sensor is done according to LV124 specification.

3.13.1 Operation Temperature Range

The sensor shall provide full operation at an ambient operating temperature range between -40°C to +85° C.

The sensor shall provide a storage temperature range between -50°C to +105°C.

In case that the maximum internal temperature is exceeded, the sensor switches to self-protection mode.

The aluminum back cover of the sensor is the main element for heat transfer.

- Cooling air must have sufficient access to the back cover of the sensor.
- The back cover of the sensor shall be in direct contact with thermal conductive materials.

For ARS404 the sensor unit environment shall perform cooling performance of 6 W during stillstand and driving (@1.9 m/s air speed from the front).

For ARS408 the sensor unit environment shall perform cooling performance of 8 W during stillstand and driving (@1.9 m/s air speed from the front).

Furthermore, the cooling shall not be deteriorated by radiant heat from other hot parts.

It is urgently recommended to check by own tests whether cooling is sufficient (even under extreme conditions) for every intended mounting position.

For automotive applications, the sensor shall be in off-state during repainting and the maximum vehicle painting temperature shall not exceed +130°C for more than 15 minutes.

In addition to that, the vehicle painting temperature shall not exceed +110°C for more than 60 minutes.

Attention: During operation in high temperature conditions the sensor can become hot. If the mounting position does not exclude contact of human beings, a warning sticker might be appropriate.

3.13.2 Mechanical Vibrations

The sensor is designed to withstand mechanical vibrations according to LV124 with the following profile:

Excitation	Broadband random vibration	
Test duration for each dimensional axis	8 h	
Acceleration rms value	30,8 m/s²	
Vibration profile Figure 25	Frequency in Hz	Power spectral density in (m/s²)²/Hz
	5	0,884
	10	20
	55	6,5
	180	0,25
	300	0,25
	360	0,14
	1 000	0,14
	2000	0,14

Table 4: Test parameter, broadband random vibration for equipment mounted on sprung masses (vehicle body)

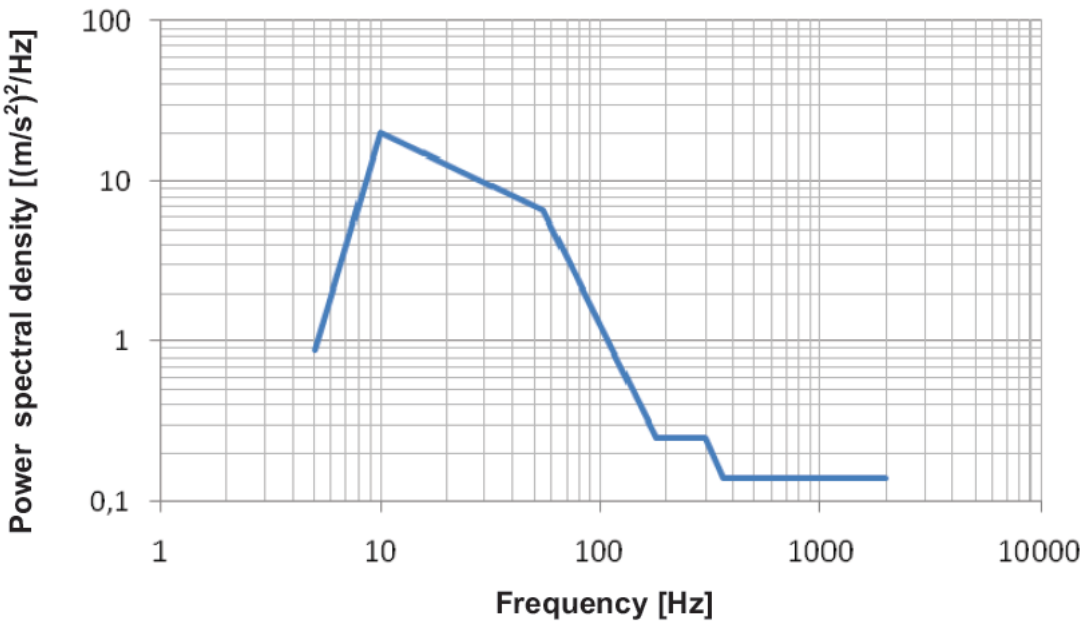

Figure 15: Vibration profile, broadband random vibration for equipment mounted on sprung masses (vehicle body)

3.14 Alignment

3.14.1 Manual Alignment Method

ARS404 and ARS 408 has to be adjust manually in both directions azimuth (alpha - horizontally) and elevation (beta - vertically).

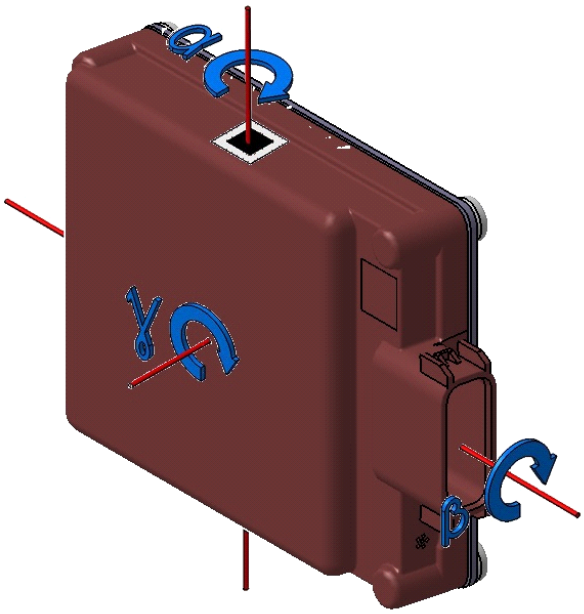

Figure 16: Naming convention for alignment angles

Misalignment include static deviations due to sensor and mechanical fixture tolerance between sensor reference plane and the measuring direction of the sensor and dynamic deviations caused by changes in loading and suspension.

The static misalignment should be determined by the customer via tolerance chain analysis from measuring direction to sensor mounting reference plane. Temperature variations and mechanical changes over lifetime of the sensor fixture shall be taken into account.

The user / customer shall determine the maximum misalignment via simulation or measurement.

A metal plate reflector is a possibility to use for the alignment procedure, which needs to be precisely adjusted perpendicularly to the vehicle driving vector or in measuring direction. Proper alignment of the metal plate has to be ensured in both, horizontal and vertical direction. Any misalignment between the vehicle driving vector or measuring direction and the metal plate will lead to a failure of object detection.

Instead of a metal plate reflector it would also be possible to use a corner reflector.

The properties of an appropriate corner reflector and related placement requirements has to be tested by the customer / user.

ARS 404-21 Entry and ARS 408-21 Premium - Short Description

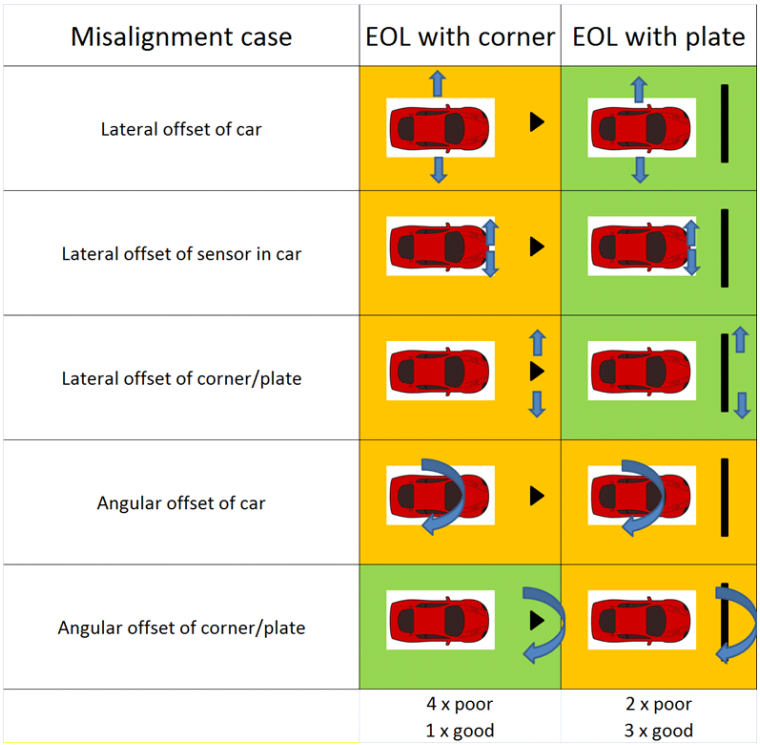

Figure 17: Advantage of plate compared to corner reflector – here example for a vehicle

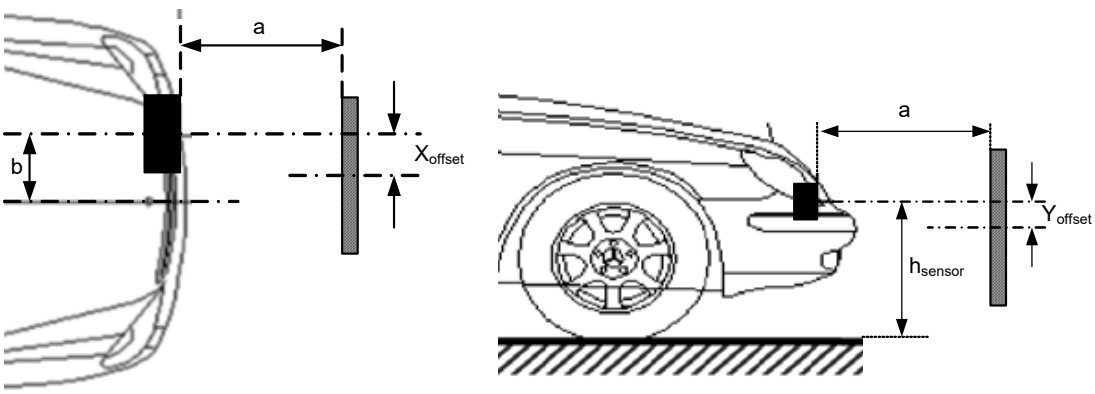

Figure 18: Setup example vehicle, top (left) and side view (right)

The distance a between sensor device and the metal plate shall be within the range 0.8m < a < 2 m.

The tolerances in X and Y-direction have only impact on the required size of the reflector plate.

All objects of any material within the area in front of the sensor device as specified by the attached diagram (except the floor) shall be covered with absorber material.

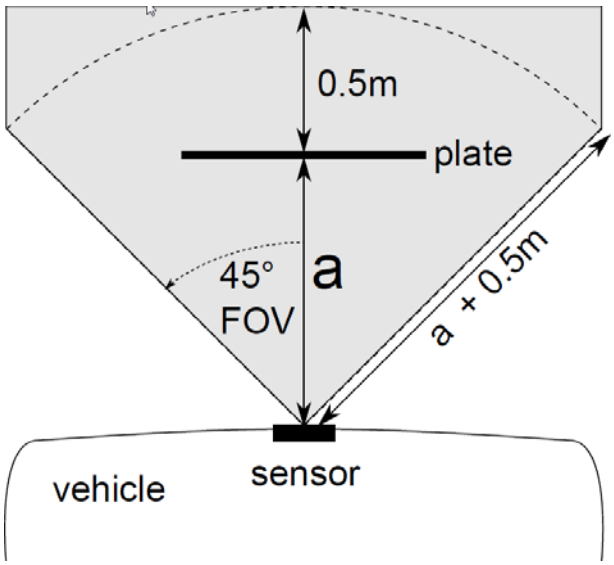

Figure 19: Keep-Out Area for Alignment

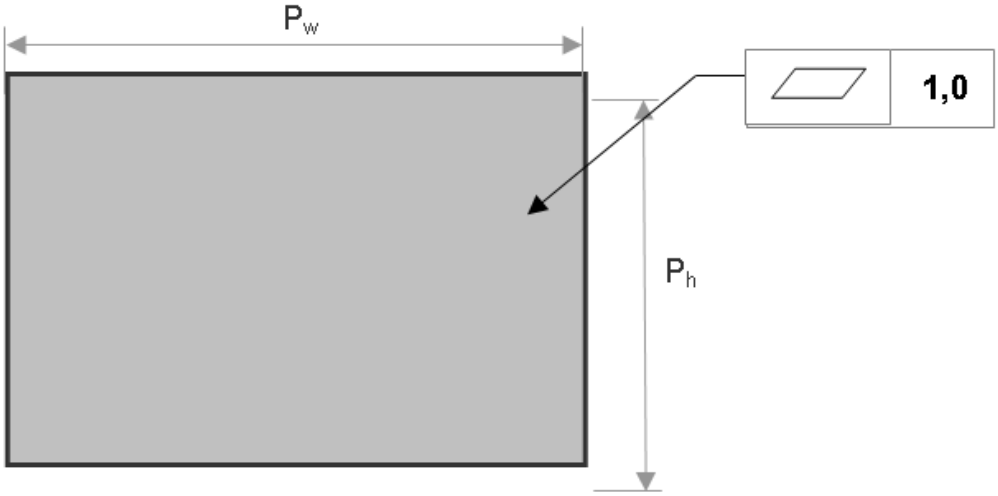

Figure 20: Alignment reflector plate

Requirements for the material of reflector plate:

- Aluminum
- Iron
- Steel
- Other materials like a mirror are possible, but have to be specified in more detail and have to be investigated by specialised customer tests to use.

Requirements for the surface finish of the plate:

- Flatness of surface shall be at least f=0.1 mm in each subarea of 80 mm x 80 mm
- Roughness RZ < 50 (is equal to <50 µm)

The reflector plate does not need to be centered and the edges of the reflector plate do not have to be in the FoV. There is no upper limit for the size of the reflector plate.

4. Electrical Conditions

The design is focused to meet standard specifications of automotive industry. Interface circuits are well known from former products. Electrical design and mechanical design will be focused to achieve high attenuation of interferences from the environment and low radiation to the environment.

E.g. the PCB is encapsulated and the connector pins are in a separate chamber built by two metallic plates. The PCB will have separate plains for ground and common voltage supplies.

4.1 Cable Connection and Fuse Protection

The connecting cables for the ARS 40X can be ordered separately with cable plug connector (without termination) in a standard cable length of 5 m. It is also possible to order only a connector with pins. The cable has a pre-assembled cable plug connector (female) for plugging into the device or via adapter, with a 9 pin SUB-D connector (female) for CAN and two pin plugs (banana plugs) for Power Supply at the other end.

The power supply for the ARS 40X radar system is provided by vehicle UBATT via permanent battery supply or ignition and ground.

The supply line has to be secured by a 10 A fuse.

To avoid electro-magnetic interferences through the supply lines to the control unit, the connections to UBATT and ground are to be kept as short as possible.

A longitudinal diode is used to protect the ARS 40X from reverse-polarity.

The protection circuit disconnects the sensor from the battery supply voltage if the voltage level is rising above 60 V and re-starts the sensor if the voltage level drops below 60 V.

The device has to be protected externally without fail at the mains power supply using a cut-out fuse.

4.1.1 CAN bus

The CAN interface allows the communication between a Notebook or PC and the device via separately converter CAN to USB. The CAN bus must have a terminal resistance of respectively 120 Ω between CAN H and CAN L at the first and last subscriber to avoid reflections. Further details about the CAN interface can be found in Chapter 9 “Interfaces”.

5. Mutual Interference

ARS 404 and ARS 408 uses several internal mechanisms to suppress or at least recognize interference from other radar sources. If the received interferences are too high, ARS 404 and ARS 408 detects just a higher noise level which prevents the sensor to detect targets with small RCS values. If this condition is detected and at the same time there is no stable relevant object (target) the sensor stops normal operation. When the interference is not detected anymore, the sensor switches back to normal operation automatically.

To achieve a sufficient use case for the sensor several suppression mechanism are implemented internally to avoid a frequent switch off.

1. Bandwidth limitation

   The radar modulation scheme itself guarantees that any interference which has a bandwidth broader than about 1 kHz will be filtered out by the different FFT algorithm for distance and relative speed.
   - IF-Path bandwidth: 40 MHz
   - Bandwidth after 1st FFT: 150 kHz
   - Bandwidth after 2nd FFT: 1 kHz

2. FMCW interference suppression

   The modulation scheme “Pulse Compression” uses two FFTs to determine range and Doppler shift as two independent signals. Any signal from FMCW (“slow chirps”) radar will cause an implausible value (noise) in the second FFT.

3. Non linear filters

   Signals coming from similar radar or even from a Continental / A.D.C. radar itself can be filtered out by non linear filter algorithm implemented in signal pre-processing chain.

   The filter work as ordered statistic or median filters based on the idea, that a signal from another sensor is much stronger than then own signal reflected by a target in same distance. A radar signal is attenuated by r^2 therefore the own signal is attenuated by r^4 due to double propagation way (way to target and back). The signal of another radar received on the direct way is just attenuated by r^2 which generates a much bigger amplitude.

4. Pseudo noise coding

   Pseudo noise coding at different points of the micro timing of a single chirp guarantees that only the own signal reflected by targets increases over the integration time over 128 chirps for every beam. The signals from non-coherent sources will create just noise.

   The ARS 40X radar concept reduces the occurrences of ghost targets caused by external interferer. The sensor performance is according to industry standard with physical limitations of the radar technology, Continental / A.D.C. is not liable for a 100% object detection performance and related claims.

6. Influence on Human Health

ARS 404 and ARS 408 are compliant with international regulatory requirements (e.g. FCC – Federal Communications Commission - and ETSI – European Telecommunications Standards Institute) and accordingly should not be hazardous to human health. In addition studies by independent experts have proven that automotive radars have no negative influence on persons (e.g. 'Forschungsbericht von der Forschungsgemeinschaft Funk e.V. - Newsletter 4-00').

7. Technical Data

ARS 404-21

Measuring performance		***to natural targets (non-reflector targets)***
Distance range		0.20..170m@0..±4° & 0.20..120m@±9° far range scan 0.20..70m@0..±9° & 0.20..40m@±45° near range scan
Resolution distance measuring	point targets, no tracking	0.40 m (0.75 m @ large v_ego for 170 m range, ability to separate targets and objects 1.5…2 x resolution
Accuracy distance measuring		±0.10 m (0.20 m @ large v_ego for 170 m range)
Azimuth angle augmentation	(field of view FoV)	-9.0°...+9.0° far range, -45°...+45° near range
Elevation angle augmentation	(field of view FoV)	18° at 6 dB two way for far and near range
Azimuth beam width (3 dB)	6 dB values 1.4 x larger	4.6° @0° far range, 9.2°@0°…13.0°@±45° near range
Elevation beam width	6 dB two way	18° at 6 dB two way for far and near range
Resolution azimuth angle	point targets, no tracking	3.3° far range, 6.6° @0°…9.3°@±45° near range ability to separate targets and objects 1.5…2 x resolution
Accuracy azimuth angle	point targets, no tracking	0.1°@±6°…0.2°@±9° far range 0.6°@0°…2.0°@±45° near range
Velocity range		-400 km/h...+200 km/h (- leaving objects... +approxim.)
Velocity resolution	target separation ability	0.28 km/h
Velocity accuracy	point targets	±0.1 km/h
Cycle time		app. 60 ms near and far measurement
Antenna channels / -principle	planar	6 channels = 2TX/2RX near + 2TX/1RX*+2RX far - *1RX - double column = higher bundling / Digital Beam Forming
Operating conditions		
Radar operating frequency band	compliant ETSI & FCC	76...77 GHz
Transmission capacity	average / peak EIRP	<12.0 dBm@77GHz / <35.5 dBm – sweep bandwidth 500 MHz
Mains power supply	at 12 V DC / 24 V DC	+8,0 V...32 V DC – for truck & passenger cars
Power consumption	at 12 V DC / 10 A fuse at 24 V DC / 10 A fuse	4.5 W/375 mA typ. & 12 W/1.0 A peak – sleep <100µA 200 mA typ. – sleep <200 µA
Load dump protection internal		disconnection >60 V and re-start returning to <60 V
Operat.-/storage temperature		-40°C...+85°C / -40°C...+90°C
Life time	acc. LV124 part 2 - v1.3	10000 h or 10 years (for passenger cars)
Shock	mechanical	500 m/s^2@6 ms half-sine (10xshock each in +/-X/Y/Z direction)
Vibration	mechanical, profile D acc.LV124 specification	20 [(m/s^2)^2/Hz]@10 Hz / 0,14[(m/s^2)^2/Hz]@1000Hz peak
Protection rating	ISO 16750 Classification (Trucks)	IP 6k 9k (dust, high-pressure cleaning) IP 6k7 (10 cm under water), ice-water shock test, salt fog resistant, mixed gas EN 60068-2-60
Connections		
Monitoring function		self monitoring (fail-safe designed)
Interface	up to 8 ID	1 x CAN - high-speed 500 kbit/s
Housing		
Dimensions / weight	L * W * H (mm) / (mass)	136.25 * 68.4 * 33.75 / app. 172 g – screw mounted
Material	housing front / rear side	PBT GF 30 black (BASF-Ultradur B4300G6 LS sw 15073) / AC-47100 (AlSi12Cu1(FE)) die cast aluminium or EN AW 5754 (3.535) AlMg3 pressed-formed aluminium
Miscellaneous		
Measuring principle (Doppler's principle) in one measuring cycle due basis of FMCW with very fast ramps		independent measurement of distance and velocity
Version ARS 404-21	sensor for the industry	CAN protocol for free communication
		The version -21 allows to set maximum 8 ID's and maximum 8 collision avoidance regions and to change the sensitivity between low and high sensitivity by the user continuously

ARS 404-21 Entry and ARS 408-21 Premium - Short Description

ARS 408-21

Measuring performance		***to natural targets (non-reflector targets)***
Distance range		0.20 ...250 m far range, 0.20...70m/100m@0…±45° and 0.20…20m@±60° near range
Resolution distance measuring	point targets, no tracking	1.79 m far range, 0.39 m (0.20m@standstill) near range - ability to separate targets and objects 1.5…2 x resolut.
Accuracy distance measuring	point targets, no tracking	±0.40 m far range, ±0.10 m (±0.05m@standstill) near range
Azimuth angle augmentation	(field of view FoV)	-9.0°...+9.0° far field, -60°...+60° near range
Elevation angle augmentation	(field of view FoV)	14° far range, 20° near range at 6 dBm two way
Azimuth beam width (3 dB)	6 dB values 1.4 x larger	2.2° far range, 4.4°@0° / 6.2°@±45° / 17°@±60° near range
Elevation beam width	6 dB two way	14° far range, 20° near range
Resolution azimuth angle	point targets, no tracking	1.6° far range, 3.2°@0° / 4.5°@±45° / 12.3°@±60° near - ability to separate targets and objects 1.5…2 x resolution
Accuracy azimuth angle	point targets, no tracking	±0.1° far range, ±0.3°@0°/ ±1°@±45°/ ±5°@±60°near range
Velocity range		-400 km/h...+200 km/h (- leaving objects... +approxim.)
Velocity resolution	target separation ability	0.37 km/h far field, 0.43 km/h near range
Velocity accuracy	point targets	±0.1 km/h
Cycle time		app. 72 ms near and far measurement
Antenna channels / -principle	planar	4TX/2x6RX = 24 channels = 2TX/6RX far - 2TX/6RX near / Digital Beam Forming
Operating conditions		
Radar operating frequency band	acc. ETSI & FCC	76...77 GHz
Transmission capacity	average / peak EIRP	<14.1 dBm@77GHz / <35.1 dBm – sweep bandwidth 500 MHz
Mains power supply	at 12 V DC / 24 V DC	+8,0 V...32 V DC
Power consumption	at 12 V DC / 10 A fuse	6.6 W / 550 mA typ. and 12 W / 1.0 A @max. peak power
Load dump protection internal		disconnection >60 V and re-start returning to <60 V
Operating-/ storage temperature		-40°C...+85°C / -40°C...+90°C
Life time	acc. LV124 part 2 - v1.3	10000 h or 10 years (for passenger cars)
Shock	mechanical	500 m/s^2@6 ms half-sine (10 x shock each in +/-X/Y/Z direction)
Vibration	mechanical, profile D acc.LV124 specification	20 $[(m/s^2)^2/Hz]$@10 Hz / 0,14 $[(m/s^2)^2/Hz]$@1000Hz (peak)
Protection rating	ISO 16750 Classification (Trucks)	IP 6k 9k (dust, high-pressure cleaning) IP 6k7 (10 cm under water), ice-water shock test, salt fog resistant, mixed gas EN 60068-2-60
Connections		
Monitoring function		self monitoring (fail-safe designed)
Interface	up to 8 ID	1 x CAN - high-speed 500 kbit/s
Housing		
Dimensions / weight	W * L * H (mm) / mass	137.25 * 90.8 * 30.66 / app. 320 g
Material	housing front / backcover	PBT GF 30 black (BASF-Ultradur B4300G6 LS sw 15073) / AC-47100 (AlSi12Cu1(FE)) die cast aluminium or EN AW 5754 (3.535) AlMg3 pressed-formed aluminium
Miscellaneous		
Measuring principle (Doppler's principle) in one measuring cycle due basis of FMCW with very fast ramps		independent measurement of distance and velocity
Version ARS 408-21	sensor for the industry	CAN protocol for free communication
		The version -21 allows to set maximum 8 ID's and maximum 8 collision avoidance regions and to change the sensitivity between low and high sensitivity by the user continuously

All sensor components are confirmed against to GADSL (Global Automotive Declarable Substance List).

The version -21 can be set or changed by the customer for different functionality via CAN bus:

a. Sensitivity from low to high and back

b. Objects (OB) or Cluster (CL)

The OB version generates well tracked pre-defined automotive objects, max. 100 objects are pre-defined. Here it make sense to set filter externally or with the Continental Radar PLC, e.g. for use only first 10 objects, to reduce the quantity of objects and to reduce the bus load.

The CL version has some added peaks and has max. 250 cluster pre-defined, which are closer to the raw data and are not tracked (so called moment view). Here it make sense to set filter externally or with the Continental Radar PLC, e.g. for use only a limited quantity of cluster, to reduce the quantity of cluster and to reduce the bus load.

7.1 Field of View (FoV) - Beam pattern

The Field of View (FoV) is the function relevant part of the radar cone as described in the mounting guideline section.

Within the FoV object detection for the different object classes is guaranteed in the limit as depicted in the data sheet chapter 7.

Maximum detection range for the far range and near range scan				
Azimuth angle	Passenger car	Motorcycle	Moped	Pedestrian
	10 dBsm (10m²)	5 dBsm (3m²)	0 dBsm (1m²)	-7 dBsm (0.2m²)
0°	170m [1] 160m [2,3,4,5]	150m	110m	75m
±9°	140m	110m	80m	55m
±20°	70m	60m	45m	30m
±45°	55m	40m	30m	20m

Note: The table was generated based on the following worst case considerations:
1.) Max. 3dB radome attenuation and no rain
2.) Maximum misalignment
3.) Sensor component with minimal valid S/N (as defined for production limit)
4.) Radom and rain attenuation of 4dB (radome only generated typically 2-3 dB attenuation, thus without including rain attenuation the values are about 12%higher)
5.) For the effective RCS no typical values are set, but values of the range bottom for Radar Cross Section (RCS) scatter of the related types was used.

Table 5: Radar Sensor Detection Ranges Design Targets ARS 404 Entry

ARS 404-21 Entry and ARS 408-21 Premium - Short Description

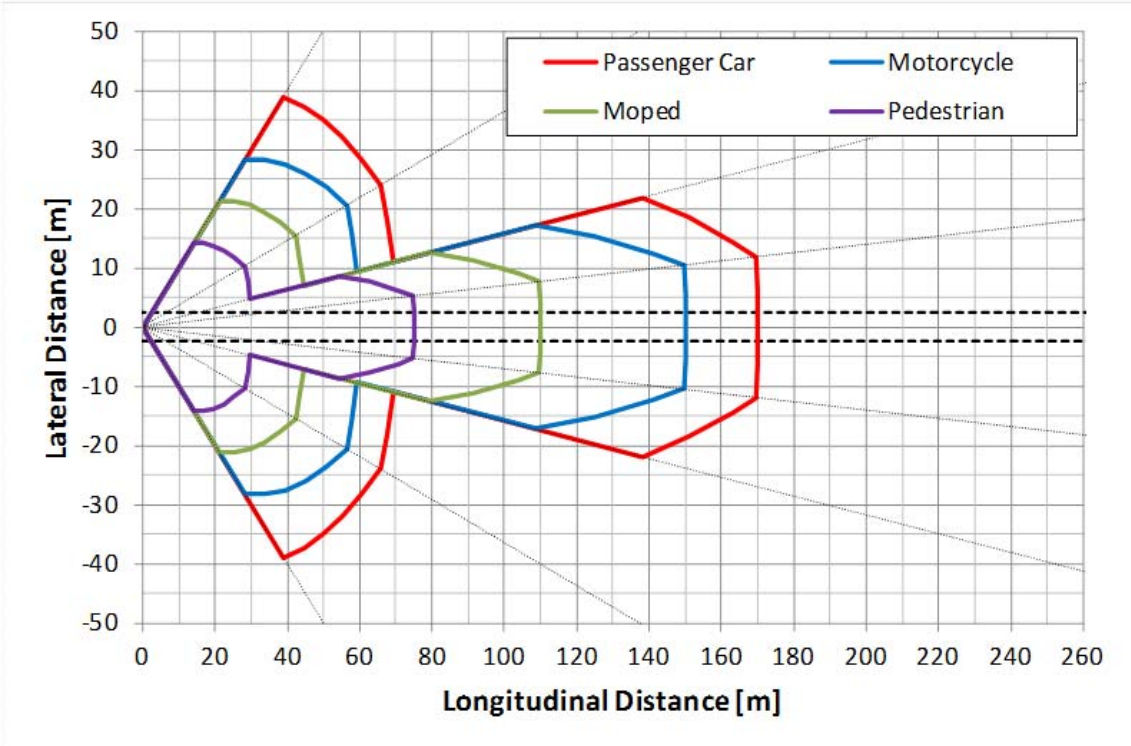

Figure 21: Field of View (FoV) for different object classes ARS 404 Entry

Maximum detection range for the far range and near range scan					
Range	**Azimuth angle**	**Passenger car**	**Motorcycle**	**Moped**	**Pedestrian**
		10 dBsm (10m²)	5 dBsm (3m²)	0 dBsm (1m²)	-7 dBsm (0.2m²)
Far Range Scan	0°	250m	220m	170m	110m
	±4°	250m	190m	140m	90m
	±6°	210m	160m	120m	80m
	±9°	150m	110m	80m	55m
Near Range Scan	0°	70m	70m	70m	50m
	±9°	70m	70m	70m	50m
	±20°	70m	70m	60m	40m
	±40°	70m	55m	40m	30m
	±60°	40m	30m	25m	15m

Note: The table was generated based on the following worst case considerations:
1.) Maximum misalignment
2.) Sensor component with minimal valid S/N (as defined for production limit)
3.) Radom and rain attenuation of 5dB (radome only generated typically 2-3 dB attenuation, thus without including rain attenuation the values are about 12%higher)
4.) For the effective RCS no typical values are set, but values of the range bottom for Radar Cross Section (RCS) scatter of the related types was used.

Table 6: Radar Sensor Detection Ranges Design Targets ARS 408 Premium

ARS 404-21 Entry and ARS 408-21 Premium - Short Description

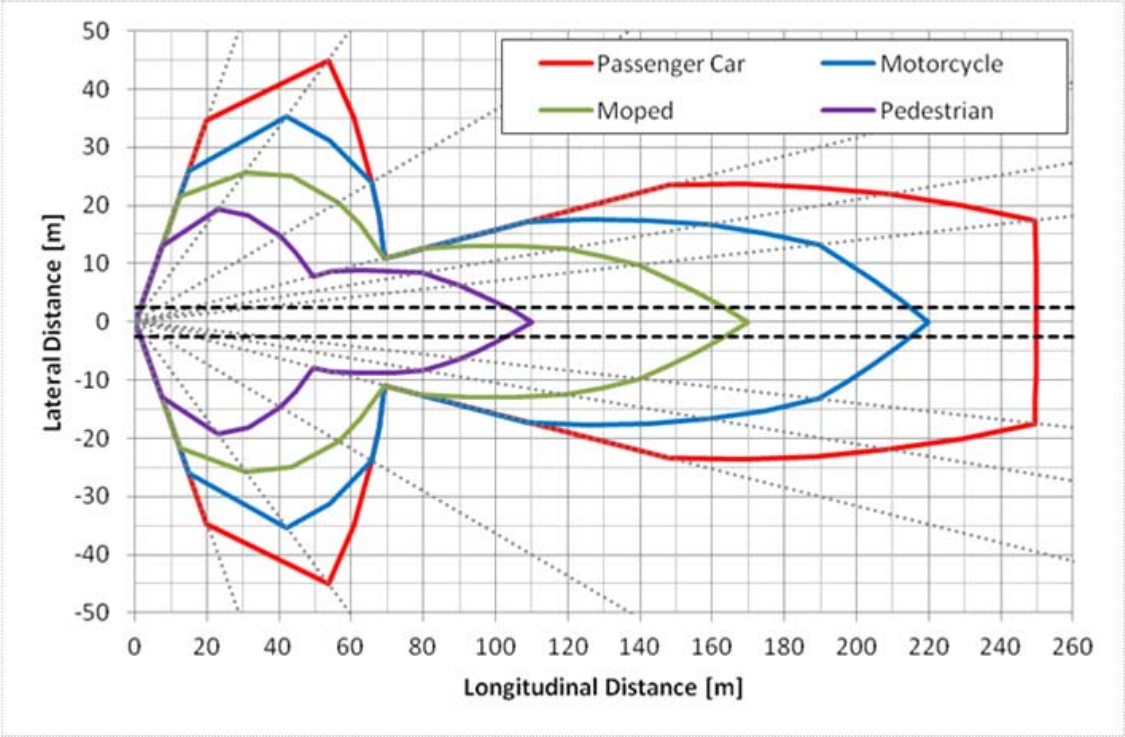

Figure 22: Field of View (FoV) for different object classes ARS 408 Premium

The areas of the field of view from the ARS 40X does not have exactly the limits for the angles as exposured in the drawing below, but the accuracy of the areas is changing app. at these values.

<u>ARS 404-21:</u>

The so-called flare angle or Field of View (FoV) of the short (near) range scanning beams is max. 90° horizontal (azimuth) and of the far range scanning beams it is max. 18° horizontal (azimuth) and in general 18° vertical (elevation).

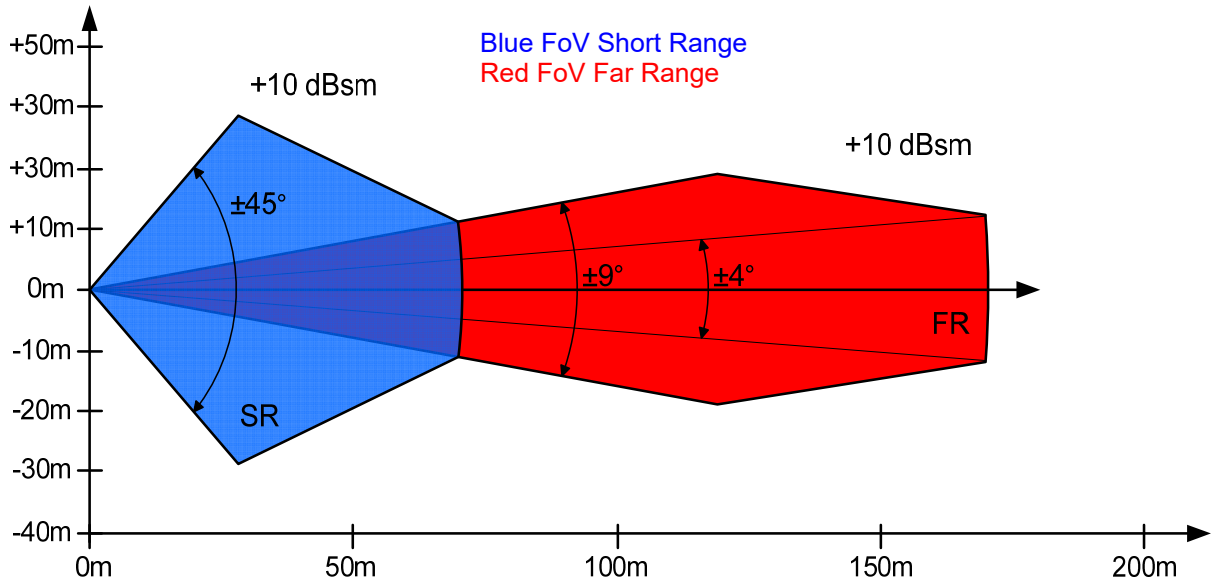

Figure 23: F.o.V. Field of View ARS 404-21 with azimuth exposure

<u>ARS 408-21:</u>

ARS 404-21 Entry and ARS 408-21 Premium - Short Description

The so-called flare angle or Field of View (FoV) of the short (near) range scanning beams is max. 120° and 80° horizontal (azimuth) and of the far range scanning beams it is max. 18° and 8° horizontal (azimuth) and 14° far vertical and 20° near vertical (elevation).

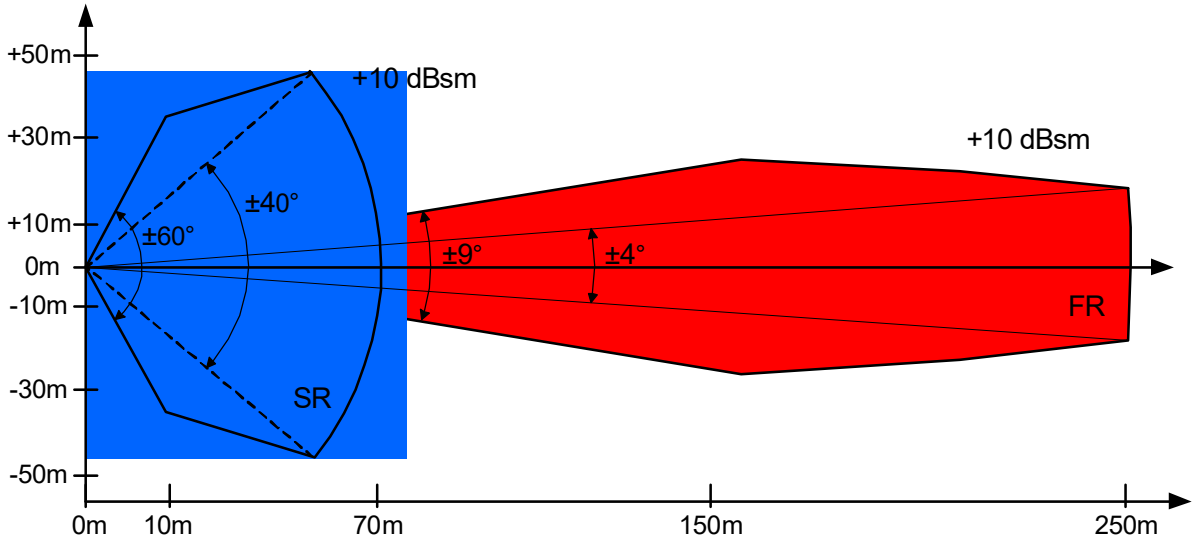

Figure 24: F.o.V. Field of View ARS 408-21 with azimuth exposure

8. Connections

8.1 Connection configuration

Only plug connectors enabled and offered from A.D.C. GmbH are used for the ARS 404-21 and ARS 408-21. The pin configuration and the pin assignment in the connecting cable are described below.

The default mounting orientation shall be in a way that the vehicle connector is facing leftwards, from a view in driving direction.

Mounting orientation affects the position of the TX- and RX-antennas. TX- and RX-antennas have different apertures; therefore they are differently influenced from secondary surfaces structure. To apply best performance the connector orientation shall be evaluated depending on mounting location by testing through the customer.

<u>ARS 404-21:</u>

ARS 404-21 Entry uses following 6 pin standard connector (Figure 25):

- 6 pin AMP waterproof vehicle connector
- Type: Hirschmann 6-pol. CAS
  (872-665-01 - Coding: A = 1)

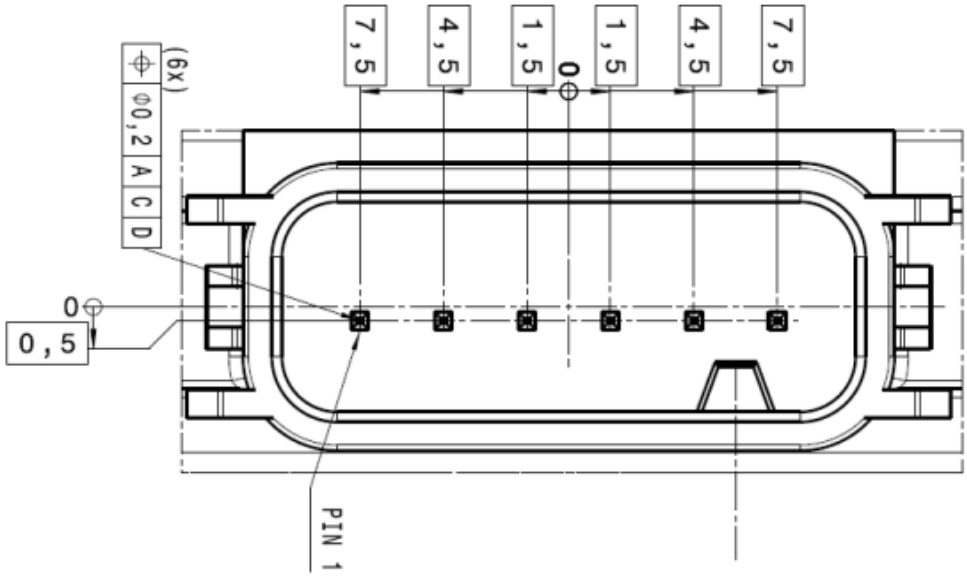

Figure 25: Drawing frontal view of the vehicle connector ARS 404-21

Pin Out of the Vehicle Connector ARS 404-21

Variant		C-B
Connector Type		6 Pin Hirschmann
Connector Pin out	**1**	KL. 31 (GND)
	2	CAN_H
	3	CAN_L
	4	KL.15 (UBATT)
	5	CAN_GND1
	6	CAN_GND2

Table 7: Pin Out of the Vehicle Connector ARS 404-21

The current ratings of the connector pins are maximum 5 A each.

The power supply for the ARS 404-21 Entry system is provided via pin 4 (UBATT) and pin 1 (GND). For automotive applications, the sensor can be powered by the vehicle power supply via ignition (KL. 15) and ground (KL. 31).

The supply line has to be secured by a 10 A fuse.

A longitudinal diode is used to protect the ARS 404-21 Entry from reverse-polarity.

ARS 404-21 Entry configuration variant B and C has an internal load dump protection for customer vehicles without central load dump protection. The protection circuit disconnects the sensor from the battery supply voltage if the voltage level is rising above 60 V and re-starts the sensor if the voltage level drops below 60 V. The sensor is designed to withstand the test requirements according to ISO 16750-2 for 12 V systems without centralized load dump suppression.

ARS 404-21 Entry and ARS 408-21 Premium - Short Description

ARS 408-21:

ARS 408-21 Premium uses following 8 pin standard connector (Figure 26):

- 8 pin AMP waterproof vehicle connector
  Type: Tyco MQS BU-GEH KPL 8P
  (C-114-18063-128 - Coding A)

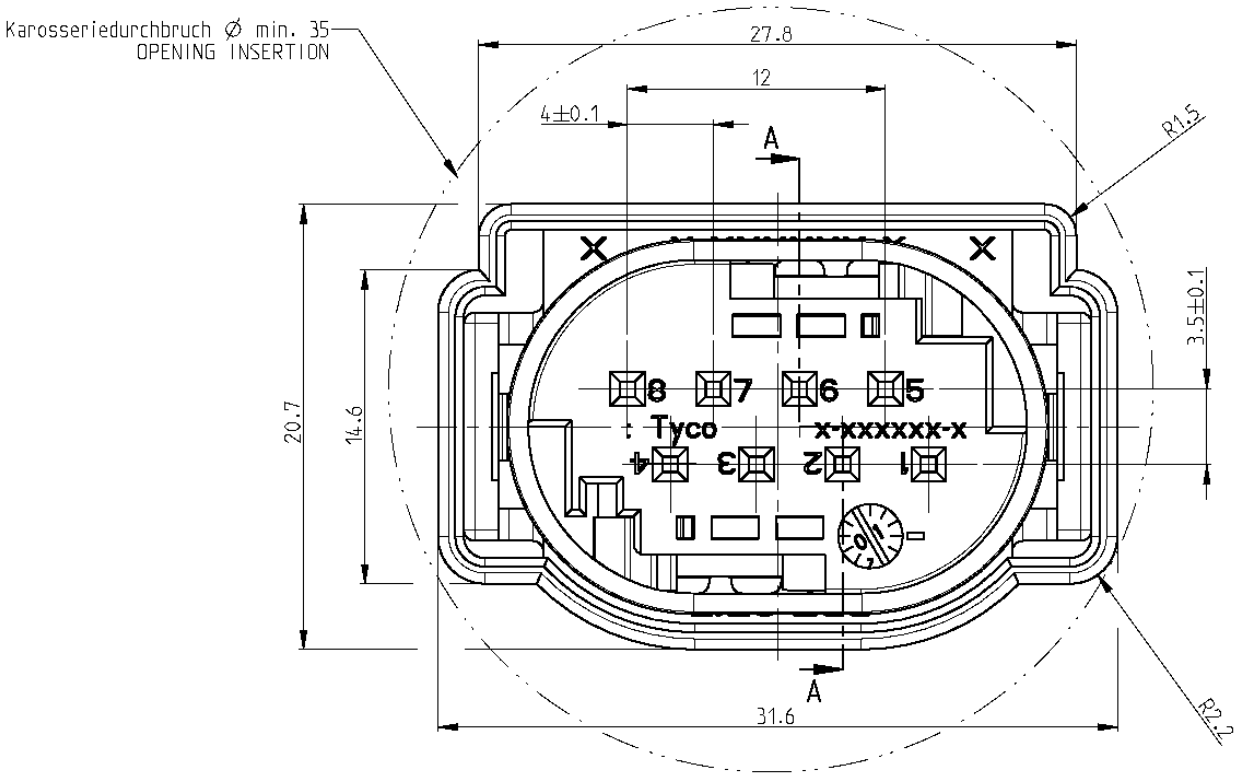

Figure 26: Drawing frontal view of the vehicle connector ARS 408-21

Pin Out of the Vehicle Connector ARS 408-21

Variant		C-C
Connector Type		8 Pin Tyco / AMP
Connector Pin out	**1**	KL.15 (UBATT)
	2	NC
	3	CAN_GND1
	4	CAN_L
	5	NC
	6	CAN_GND2
	7	CAN_H
	8	KL.31 (GND)

Table 8: Pin Out of the Vehicle Connector ARS 408-21

The current ratings of the connector pins are maximum 5 A each.

The power supply for the ARS 408-21 radar system is provided via pin 1 (UBATT) and pin 8 (GND). For automotive applications, the sensor can be powered by the vehicle power supply via ignition (KL. 15) and ground (KL. 31).

The supply line has to be secured by a 10 A fuse.

To avoid electro-magnetic interferences through the supply lines to the control unit, the connections to UBATT and ground are to be kept as short as possible.

A longitudinal diode is used to protect the ARS 408-21 from reverse-polarity.

The protection circuit disconnects the sensor from the battery supply voltage if the voltage level is rising above 60 V and re-starts the sensor if the voltage level drops below 60 V.

The sensor is designed to withstand the test requirements according to ISO 16750-2 for 12 V systems without centralized load dump suppression.

ARS 404-21 Entry and ARS 408-21 Premium - Short Description

8.2 Cable configuration ARS 404-21

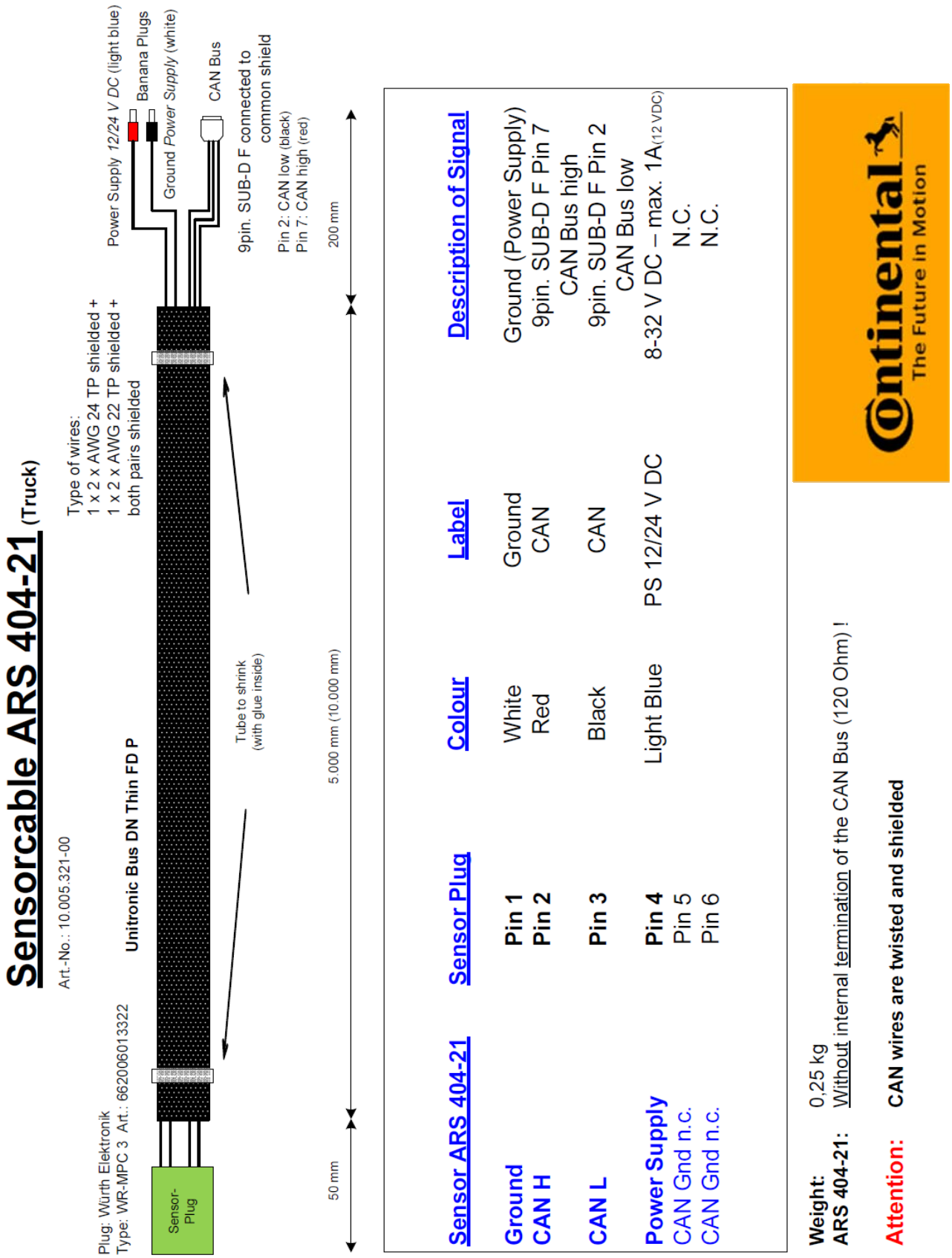

Figure 27: Drawing Cable Configuration ARS 404-21

ARS 404-21 Entry and ARS 408-21 Premium - Short Description

8.3 Cable configuration ARS 408-21

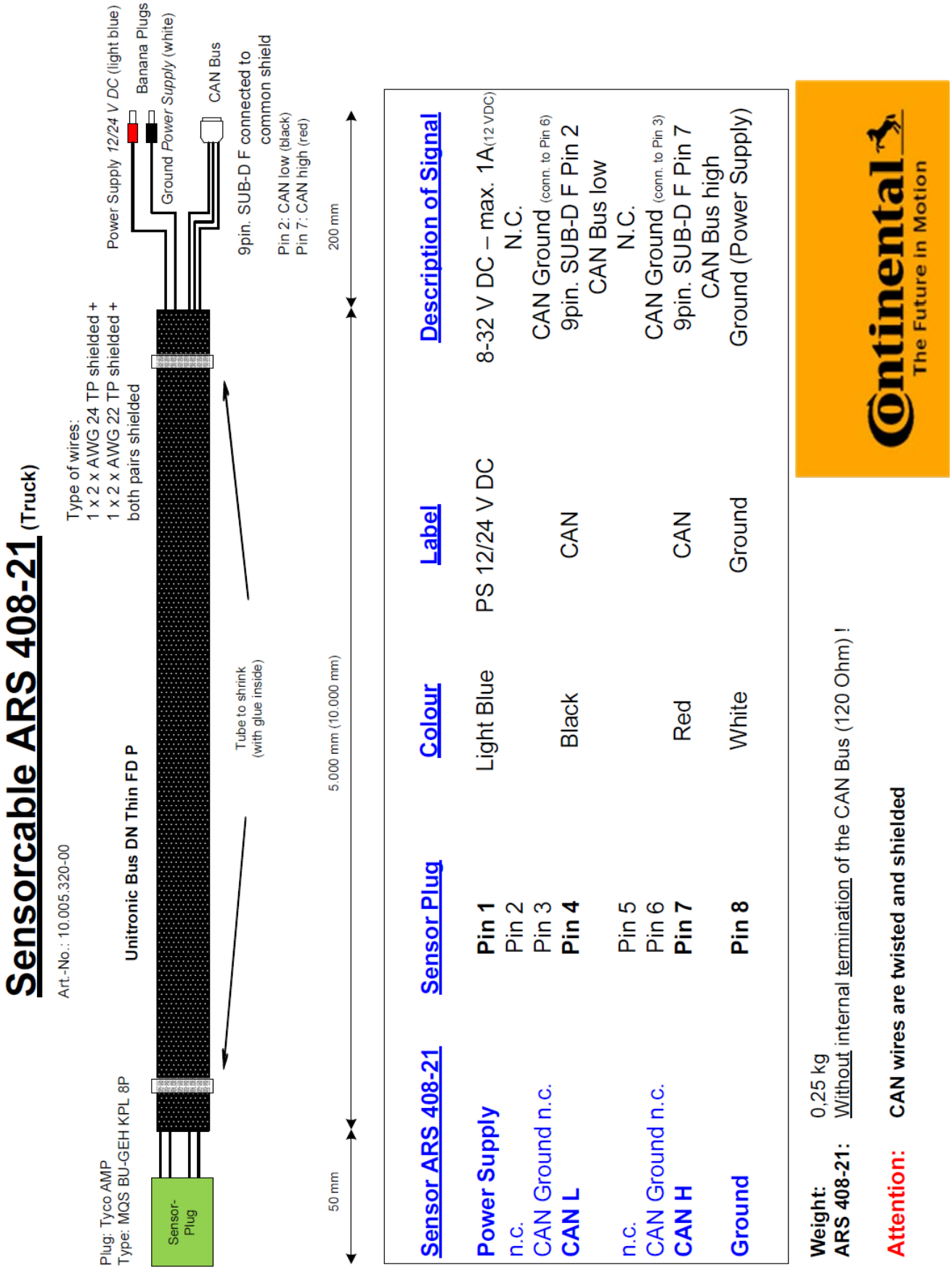

Figure 28: Drawing Cable Configuration ARS 408-21

9. Interfaces

9.1 CAN interface (ARS 404-21 and ARS 408-21)

The CAN interface uses a special protocol as mentioned before, and is designed for free communication directly via CAN or with converter e.g. from CAN to USB.

ARS400 could support CAN physical interface as specified in ISO-11898.

The device provides a vehicle communication interface via High Speed CAN with 500 Kbit/s

Generally shielded wiring with twisted pair (TP) conductors should be used to connect the ARS 404 and ARS 408.

General information about the CAN interface:
OSI is an open layer model and serves as the basis for manufacturer-neutral network protocols. The model has 7 layers, whereby 7 is the highest layer. Layer 1 is the bit transfer layer and physical level in which, for example, mechanical plug connectors, electrical level, pulse form, wavelength, cable, glass-fiber and radio are defined. Layer 2 is the packet level, which governs how data packets are to be forwarded to the next nodes (subscribers) and defines the security status of the connection. A maximum of 255 nodes can be connected to a CAN interface. The identifier (ID number) defines the priority of a message. Each subscriber (station) can determine whether a message is relevant or not using this ID. It can then be processed by the subscriber or ignored accordingly. When a message is sent, all the other subscribers in the CAN bus system (network) become recipients.

Line length	Max. transfer rate	Specific line resistance	Cable cross section
0 – 40 m	1 Mbit/s	70 mΩ/m	0.25 – 0.34 mm^2
40 – 300 m	200 Kbit/s	< 60 mΩ/m	0.34 – 0.60 mm^2
300 – 600 m	100 Kbit/s	< 40 mΩ/m	0.50 – 0.75 mm^2
600 – 1000 m	50 Kbit/s	< 26 mΩ/m	0.75 – 0.80 mm^2

Table 9: Examples for cable lengths and cross sections for different CAN transfer rates

Condition	Protection
Inverse-polarity protection	Implemented in the transceiver
Over voltage protection of bus pins	(-27 V ... +40 V) -40 V … +40 V (implemented in the transceiver)
Input resistance (differential)	>19 kOhm (Termination not populated)
CAN pin short-circuit current limiter	200 mA (Implemented in the transceiver)

Table 10: Protection of CAN Interface

9.2 Input Signals

9.2.1 Possible Dynamic Parameters

Following dynamic parameters are possible. Required signal quality depends on expected sensor performance and need to be tested by the customer.

- Yaw Rate
- Vehicle Speed

10. Device Dimensions

For automotive applications the device needs to be integrated in the front end of the vehicle.

10.1 Dimensions ARS 404-21

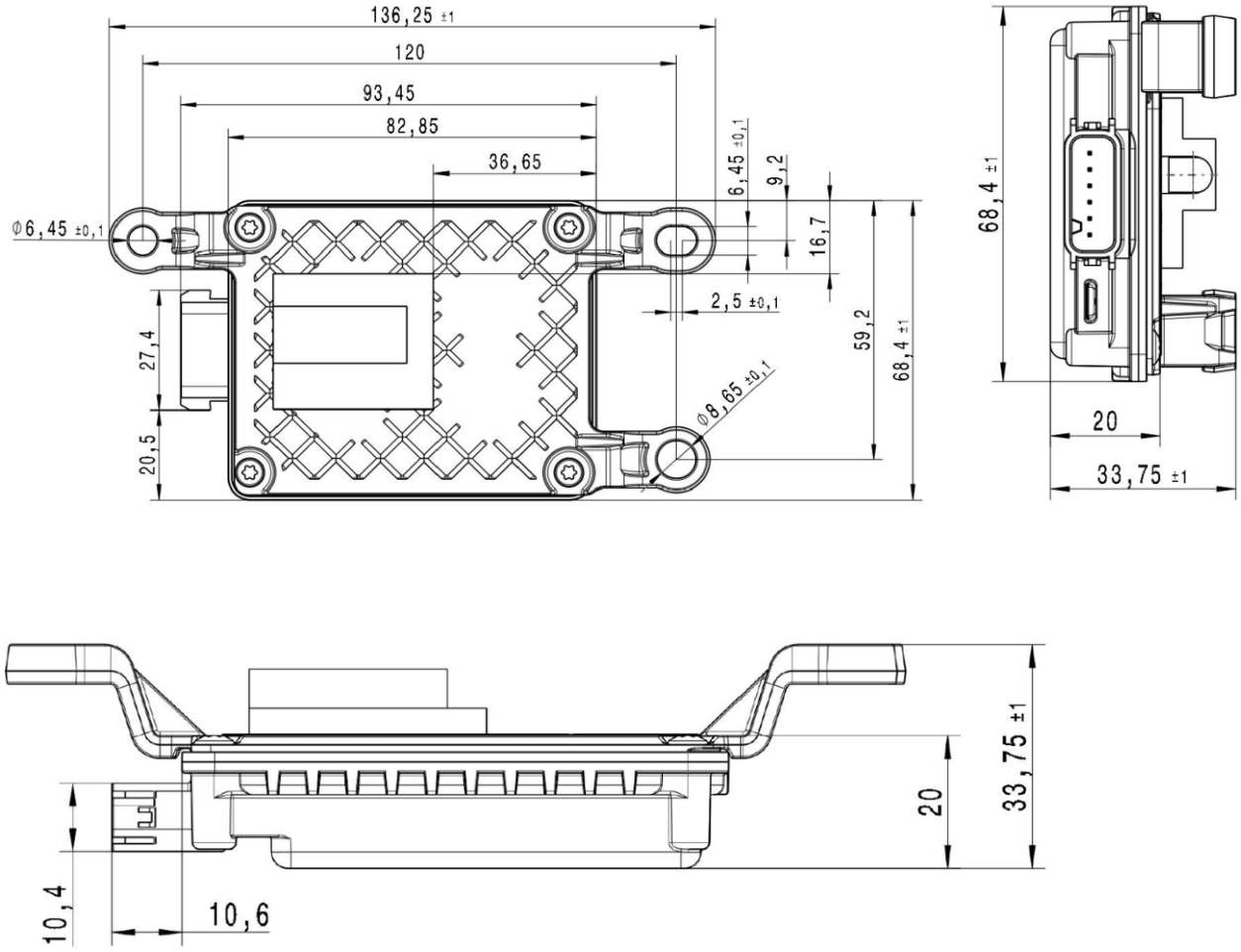

Figure 29: Dimensions of ARS 404-21 device
(rear (upper left), connector and side (upper right) and bottom and side (lower) view including MTA (only included in development parts))
MTA = Measurement Technique Adapter for direct access to raw data in A.D.C. development environment

10.2 Dimensions ARS 408-21

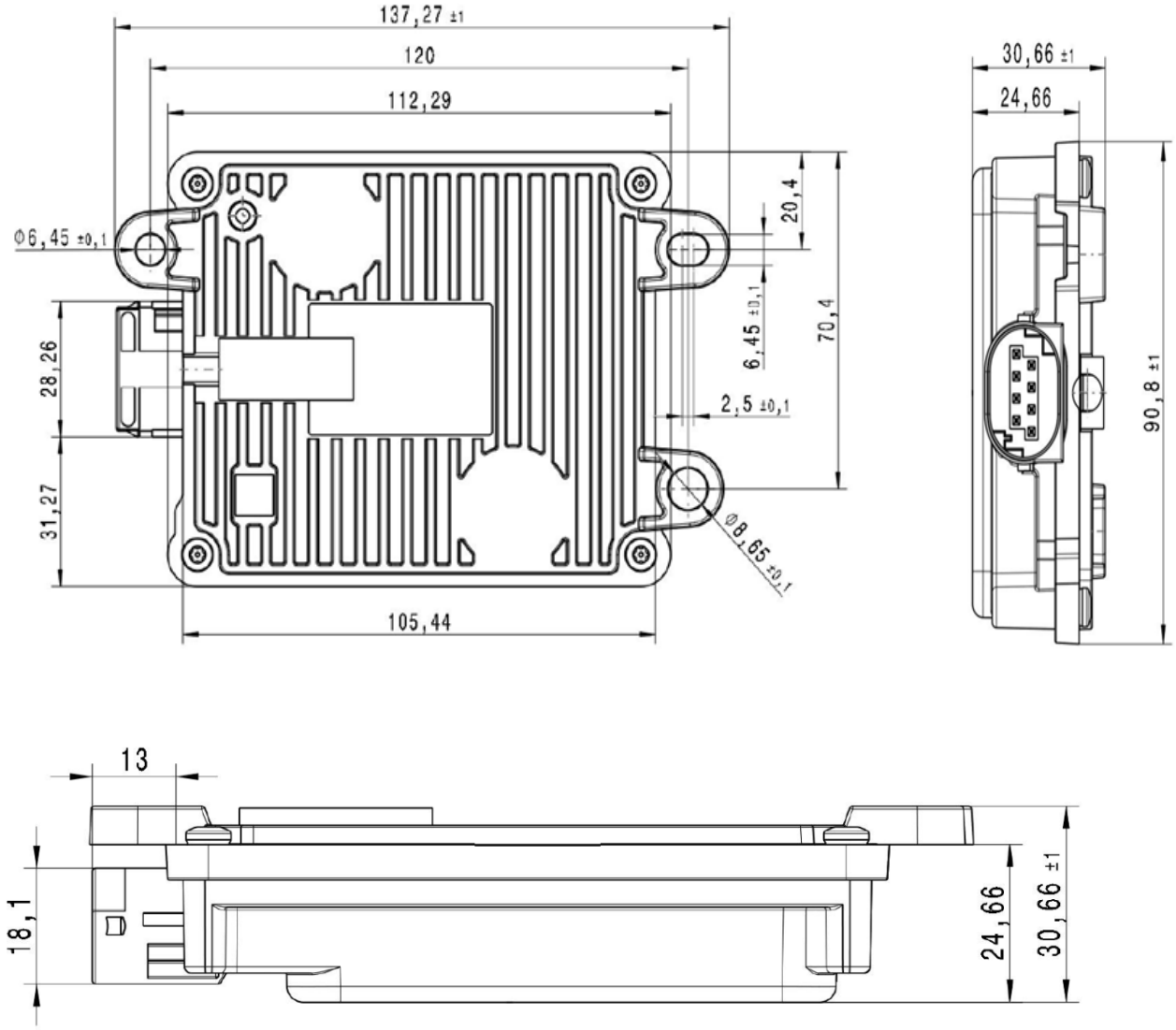

Figure 30: Dimensions of ARS 408-21 device

(rear (upper left), connector and side (upper right) and bottom and side (lower) view including MTA (only included in development parts))

MTA = Measurement Technique Adapter for direct access to raw data in A.D.C. development environment

11. Label / Marking

The ARS 40X sensors contains in standard case one laser marked label incl. data-matrix code on the front of the housing. In case of a special case software (customized or power reduction) one additional label is situated on the side as a glued type label. In Figure 31 the standard laser marked label is shown and contain areas reserved for A.D.C. / Continental and for the customer information.

Investigations have shown a negligible effect on radar performance.

For queries and request the serial-ID (Identification Document) shall be stated.

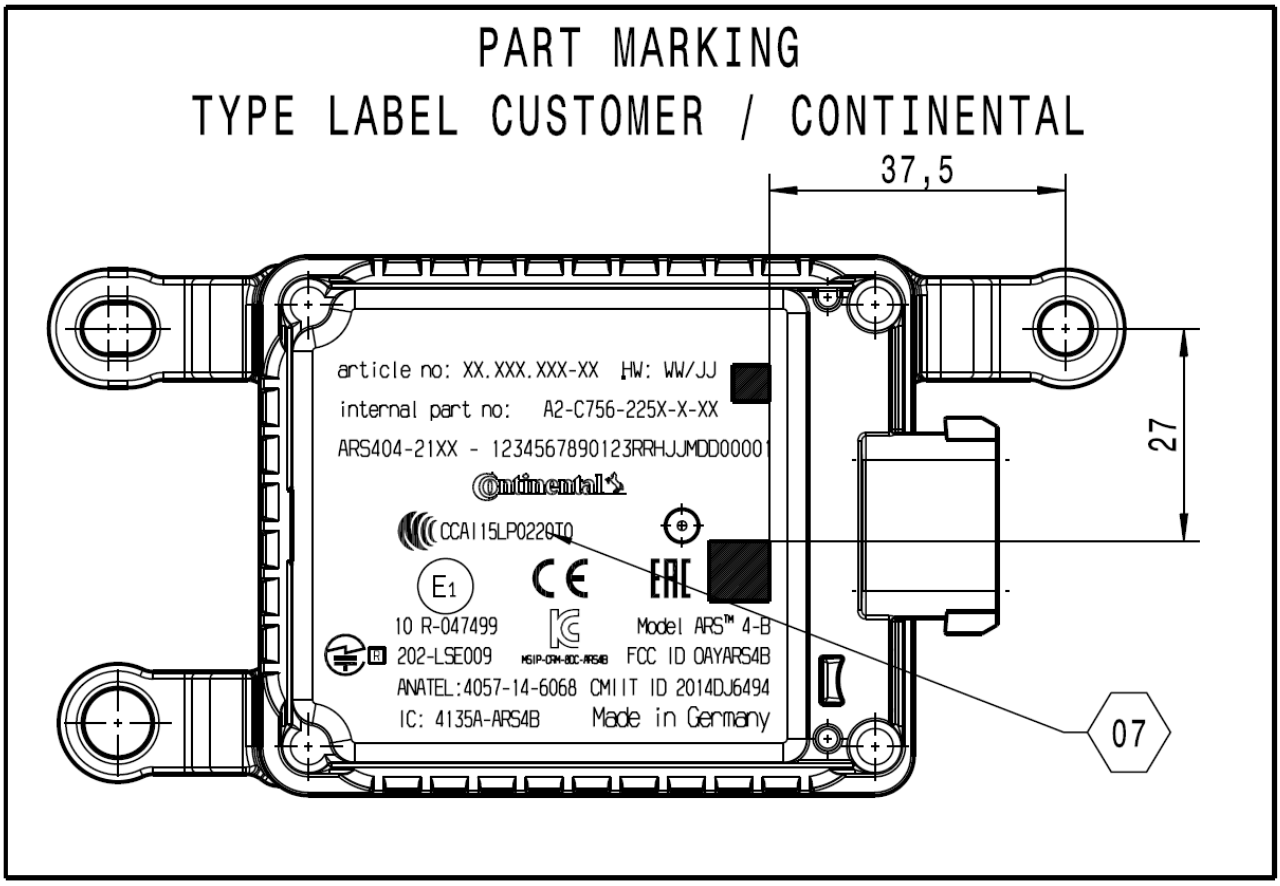

Figure 31: ARS 404-21 label with area for Continental and the customer info

ARS 404-21 Entry and ARS 408-21 Premium - Short Description

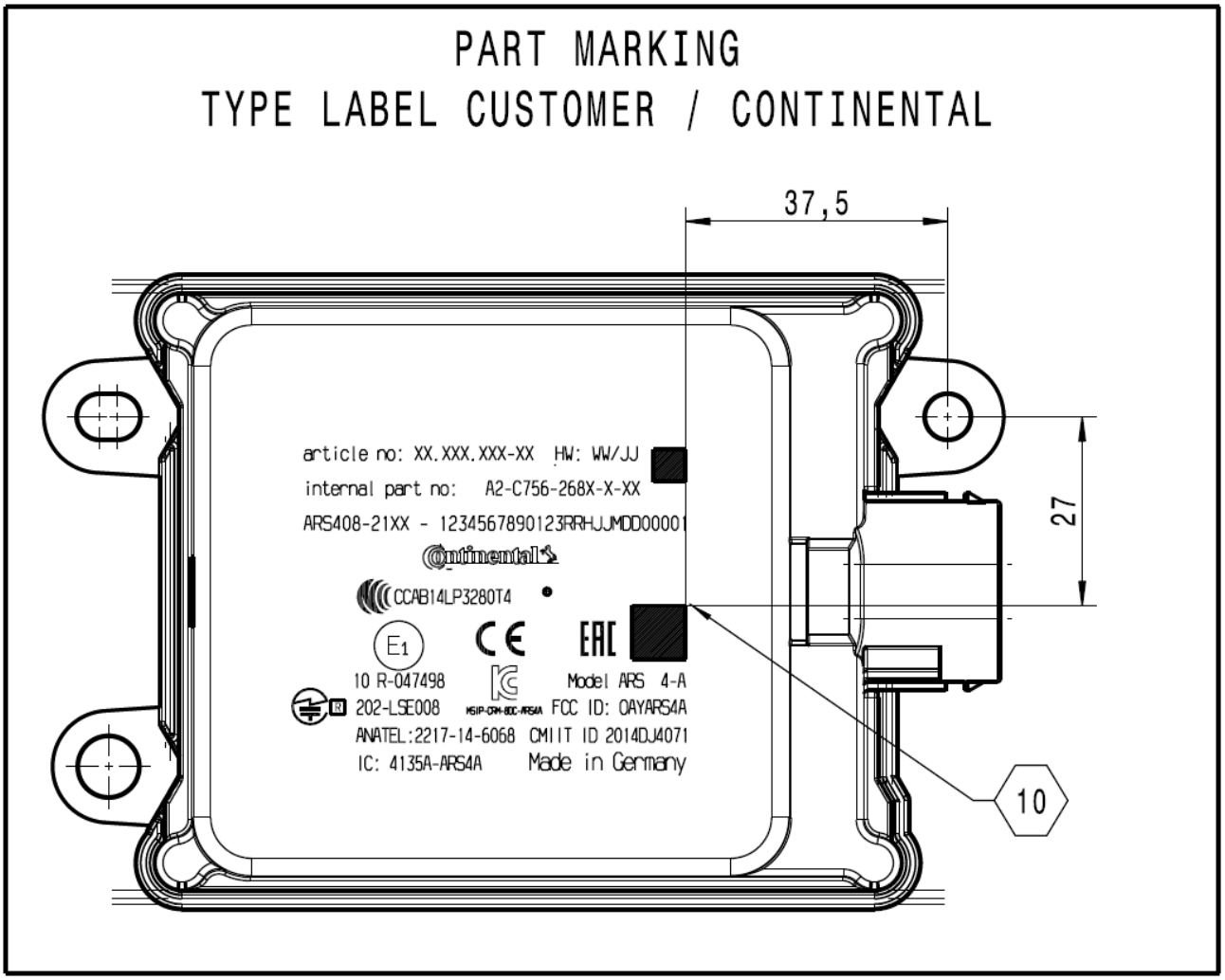

Figure 32: ARS 408-21 label with area for Continental and the customer info

12. Notes on Safety and Risks

This chapter is intended to enable owners and operators of the ARS 40X to recognize all usage-related risks in good time, i.e. in advance wherever possible.

The ARS 40X was developed for use in automobiles. Users must be in possession of basic technical knowledge, and it is assumed that this is the case. The device should only be used by trained operators.

The person or owner responsible for the device must ensure that all operators understand and observe these safety notes.

If the ARS 40X is part of a system, the system manufacturer is responsible for ensuring that the safety-related aspects are heeded, e.g. the operating manual, labeling and instructions.

12.1 Areas of responsibility

Scope of responsibility of the manufacturer regarding the original device or equipment:

A.D.C. Automotive Distance Control Systems GmbH
Segment Surround View - Industrial Sensors
A Company of the Continental Corporation
Peter-Dornier-Straße 10
D-88131 Lindau
Germany

A.D.C. GmbH is responsible for supplying the device, including the short description and the original accessories, in a technically safe and sound condition.

Scope of responsibility of the manufacturer of third-party accessories:

Manufacturers of third-party accessories are responsible for the development, implementation and communication of safety concepts for their products, and their effects in conjunction with the ARS 40X device from A.D.C. GmbH.

Scope of responsibility of the owner:

The owner is responsible for ensuring that the device (and equipment) are used for their intended purpose, for the actions of his employees, for giving instruction to the employees, and for the operational safety of the equipment.

The owner is subject to the following obligations:

- He must understand the safety information on the device and the instructions given in the operating manual.
- He must be familiar with the locally applicable accident prevention regulations.
- He is to notify A.D.C. GmbH, or one of its authorized dealers, as soon as a device or the equipment displays any safety defects.

12.2 Operating risks

The implemented software is not defined for a free use in safety critical systems or in public.

Measures:

The user can generate an own complete system with this sensor, to fulfill safety relevant applications or systems.

Beware of falsified measurings when using a defective device after it has been dropped or subjected to any other prohibited stress or changes, which becomes an overstepping to the specified terms in this manual, e.g. after a lightning strike.

Measures:

Take control the correct measuring periodically, in particular following excessive usage of the device, as well as prior to and following important measuring jobs. May be it is necessary to replace the complete device. Also make sure that the cover or secondary surface are kept clean and pay attention to any possible mechanical damage.

Lacking or incomplete training can lead to incorrect operation or improper usage. This may result in accidents involving serious injury, or damage to property, assets or the environment.

Measures:

All operators are to observe the manufacturer's safety instructions and any instructions given by the owner.

No labeling or warning notices on the ARS 40X are to be concealed when installing the device. This can lead to dangerous situations.

Measures:

Make sure that all labels and signs are readily visible at all times. Additional information can or must be attached as required to ensure safe operation at all times.

When using the devices to measure the distance to, or positioning of mobile objects such as vehicles, cranes, platforms, wagons, machines, etc., falsified measurements may occur as the result of unforeseen events (interruption of the radar beams).

Measures:

Your system must be designed and operated so that in the event of a falsified measurement, device malfunction or a power failure, suitable safety fittings or equipment, e.g. a redundant design, safety switches, etc., ensure that no damage can occur.

When deploying multiple sensors, ensure that there is no mutual interference between them and the ARS 40X.

Measures:

1. Your system must be so designed, installed and operated so as to avoid any direct reception of signals from opposite-facing sensors.
2. Adjacently installed (i.e. parallel receiving) ARS 40X units must be situated an adequate distance apart so that they cannot be affected by data being transmitted from other sensors.

When installing the devices, it must be ensured that the cover or the secondary surface of the ARS 40X is not directly facing ice-particles or water films. Falsified measurements may be the result.

Measures:

Check in all directions and the immediate vicinity of the deployment site of the device, and if necessary mount a heater or other protection at the device.

When welding activities close to the place of installation of the device ARS 40X the device could be to damaged or destroyed.

Measures:

The lines of the device have to be separated during the welding activities.

Corresponding to WEEE guideline about Electric and Electronic Old-Devices the old devices have to be professional disposed respectively recycled by the manufacturer or importer after ending the durability. Make sure, that these old devices in no case have to be loaded to the generic domestic waste – signed by the symbol (icon) in figure 14.

Measures:

Free of charge waste disposal of old devices after ending of the durability by the manufacturer or importer.

Figure 33: Icon for sign according to WEEE – prohibition for old devices into the domestic waste

The registration code of the A.D.C. GmbH: **WEEE-Reg.-No. DE 92447412**

Always make sure that the device or equipment is not operated, serviced or used by personnel who have not been properly trained to do so.

12.3 Electromagnetic compatibility

We regard electromagnetic capability to be the facility of the ARS 40X to function correctly in an environment with electromagnetic radiation and electrostatic discharges without causing electromagnetic interference in other devices.

Other devices may be disturbed by electromagnetic radiation. Although the ARS 40X fulfils the stringent requirements of the applicable guidelines and standards, A.D.C. GmbH cannot fully exclude the likelihood of interference from any other devices.

12.4 Maintenance and care

The ARS 40X is practically maintenance-free. The cover or secondary surface should be cleaned depending upon the prevalent environmental factors. Only use a damp, lint-free cloth to clean the cover or secondary surfaces. Under no circumstances should corrosive or aggressively reacting cleaning agents be used.

When cleaning the cover of the ARS 40X, it is absolutely imperative to avoid any scratches or damages of the housing.

When working with safety and components of anti-collision applications, you should proceed in accordance with the valid BGV D6 crane regulations (previously the UVV-VBG 9 crane) by conducting a daily check to ensure that all components and devices of the A.D.C. GmbH and other components of the system integrator of the anti-collision protective system are installed, adjusted and functioning correctly before putting the plant into operation, e.g. during the course of checking the track end thresholds. The functions can be checked by taking test measurements at a defined distance.

A daily check should be performed to ensure that the ARS 40X and system are functioning correctly before putting the plant into operation.

12.5 Service

A.D.C. GmbH must be contacted prior to manipulating the ARS 40X for deployment in a special application or for any other reasons.

You can contact your supplier or the Technical Support team at A.D.C. GmbH regarding the necessity for technical support when putting the device into operation, in the event of operating problems, errors or defects, or regarding any other maintenance-related issues affecting the device or equipment.

12.6 Approval

Safety certification in compliance with DIN EN 61508 (EN 954) Category 1, 2, 3 or 4 is always to be viewed by the owner or plant constructor in conjunction with all the relevant plant components, such as A.D.C. radar sensors, control units, drive and breaking systems, power supplies or tachometer generators, etc., and is to be fulfilled in its entirety. Any required redundancies are to be taken into account accordingly.

12.7 Additional information

Please contact your supplier if you are not sure how to correctly install or set up the ARS 40X during assembly with regard to aspects that are covered inadequately, or not all, in this operating manual.

A.D.C. Automotive Distance Control Systems GmbH
Segment Surround View - Industrial Sensors
A Company of the Continental Corporation
Peter-Dornier-Straße 10
D-88131 Lindau
Deutschland / Germany
Tel.: +49 8382 9699-114
Fax: +49 8382 969922-114
Email: Roland.Liebske@continental-corporation.com
www.continental-automotive.com/industrial-sensors

© Copyright by A.D.C. GmbH 2017