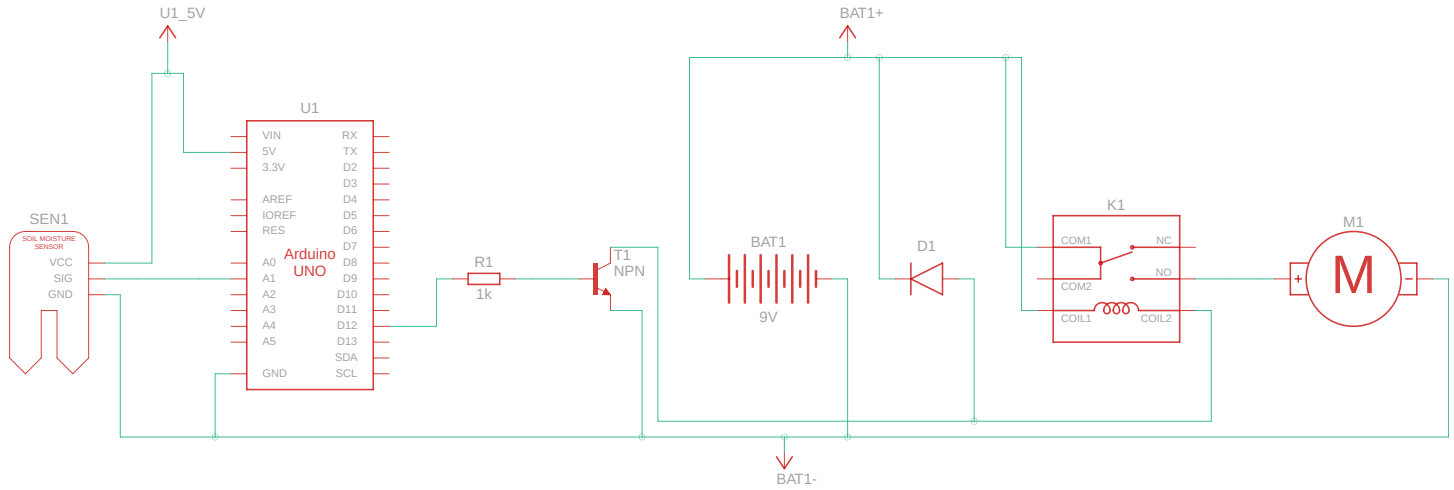

Made with Tinkercad®

Title: Copy of Irrigador

Date: 31/08/2025, 09:26:56

Sheet: 1/1