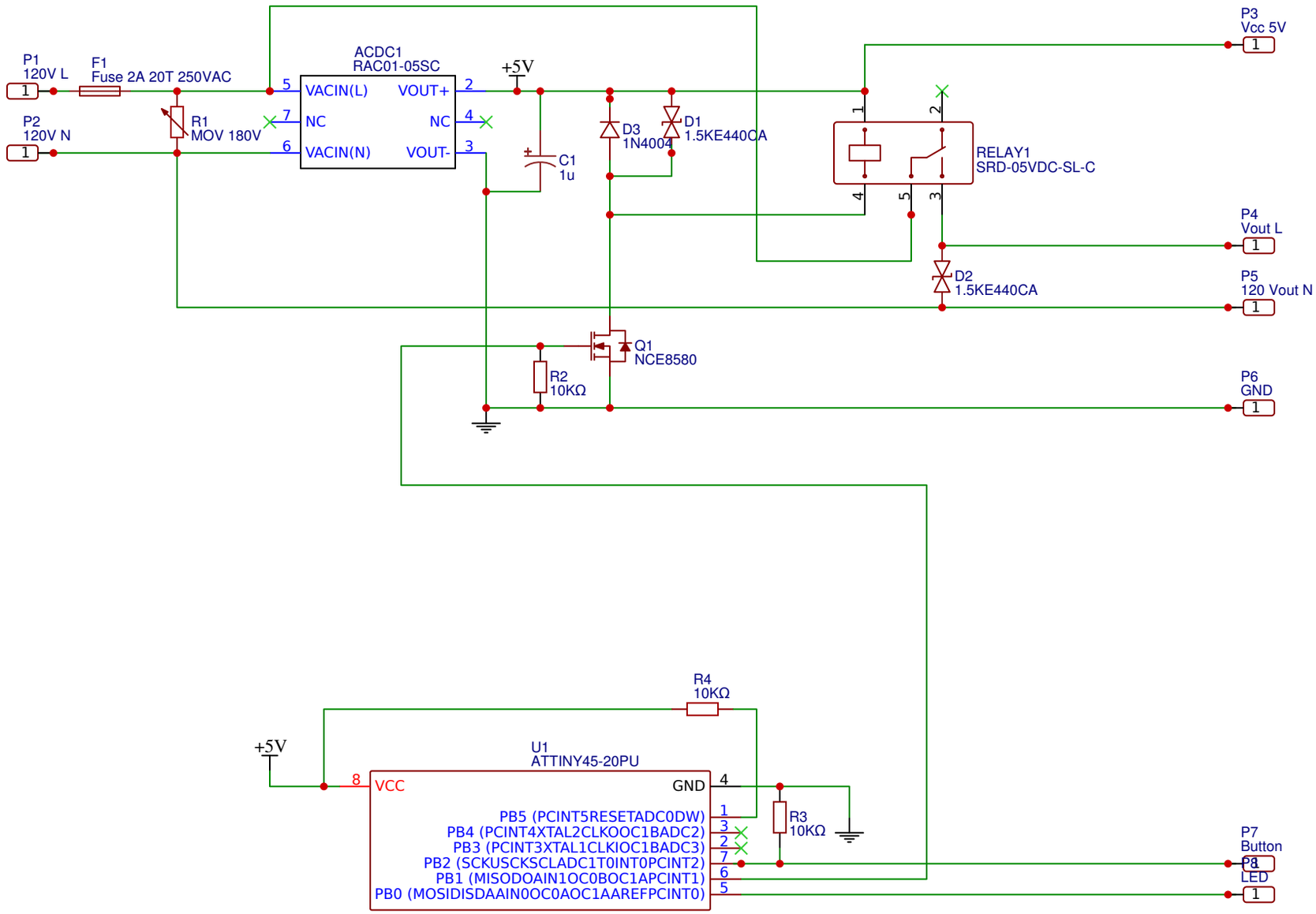

TITLE: Garbage Disposal Relay	REV: 1.0
Date: 2018-11-04	Sheet: 1/1
EasyEDA V5.8.20	Drawn By: Markus Gutschke