Math 8 — Functions and Modeling

Neil Donaldson

Spring 2026

Introduction

This course aims to help future teachers refresh and reinforce some of the conceptual foundations of grade-school mathematics. Teaching is often a matter of *selection*: choosing examples and explanations suited to the level of your students. To do this effectively, you must understand concepts at a higher level than you teach. The *mathematics* in this course shouldn't be difficult for math majors. Instead this is an opportunity to think about content you might one day *teach*. How would *you* explain the material? How does it connect to other ideas? Can you anticipate student questions, and how would you respond?

We start with two motivational problems.[1]

1. How can we travel across the surface of a cube between two opposite vertices so that the path is as short as possible?

   Should you follow the path indicated? If yes, explain why. If not, how should you find the shortest path?

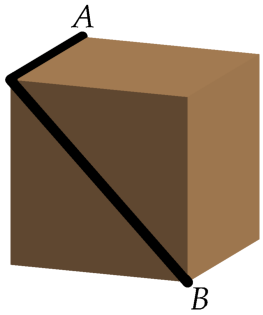

Problem 1

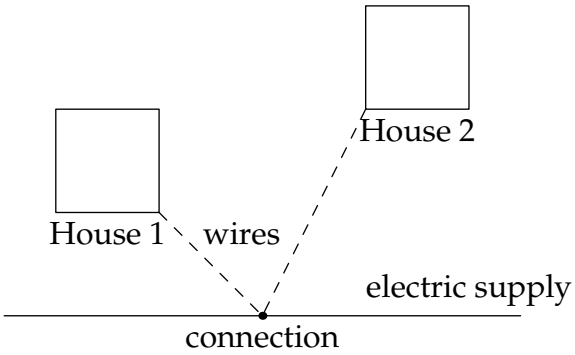

Problem 2

2. Two houses are to be connected to the electricity supply using a single connection.

   How should we determine where to place the connection so as to minimize the required length of wire? What information do you need in order to find the connection point?

Don't just think about the right answer! Consider how you might discuss these problems with students of different ability levels. Why might calculus *not* be a sensible approach? Are there any similarities between the two problems? Brainstorm some strategies...

[1]We are grateful to materials from UT Austin's UTeach program for suggesting several of the examples in this course including these motivational problems.

1 Sets & Functions

1.1 Basic Definitions

When did you first encounter a function? Middle-school? Elementary school? Earlier...How would you define *function* to someone with limited mathematical knowledge? Would you use words like *rule, assign, element, domain, vertical line test,* etc.? How helpful are these to your audience?

Examples 1.1. How would you explain the idea that the following do or do not represent functions?

1. $y = x^2$
2. Mon: fish, Tue: pork, Wed: fajitas, Thur: carbonara, Fri: pizza
3. $(3,5)$, $(2,6)$, $(4,2)$, $(3,1)$.
4. $x^2 = y^2$

After considering the examples, perhaps you settle on a semi-formal definition:

> A function f is rule assigning exactly one output $f(x)$ to each input x

Is this a useful definition? In what ways is it imprecise? Does the imprecision matter?

Of course the answers to these questions depend on your audience! What ideas do you want to convey to your students, and can you do so without overburdening and intimidating them? To begin working towards a more complete picture, we need to think about what the *inputs* and *outputs* are allowed to be. This introduces some vocabulary and requires a small amount of set notation.

Definition 1.2. A *set* A is a collection of objects, or *elements*.[2] The notation $a \in A$ means that a is an element of A, sometimes read 'a lies in A.' In the abstract, sets are often written upper case and their elements in lower case.

A set B is a *subset* of a set A, written $B \subseteq A$, if every element of B is also an element of A: that is,

$$b \in B \implies b \in A \qquad \text{("If } b \text{ lies in } B\text{, then } b \text{ lies in } A\text{")}$$

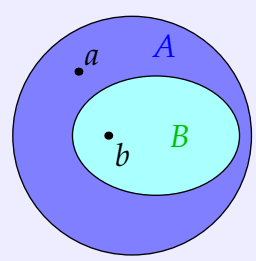

The picture illustrates sets A, B and elements a, b for which $B \subseteq A$, $a \in A$, $b \in B$ and $a \notin B$ (a does not lie in B).

[2] This is enough for our purposes, though a course in set theory should convince you that this definition is not without its own problems. Selection is always at work...

Example 1.3. Suppose the elements of a set A are the numbers 1, 3, 5, 7 and 9. The simplest way to write this is using *roster notation*: we list the elements (in any order) between braces

$$A = \{1, 3, 5, 7, 9\}$$

Subsets are commonly expressed using *set-builder notation*. Here is a subset of A:

$$B = \{a \in A : 2 < a < 8\} \qquad \text{("The set of } a \text{ in } A \text{ such that } a \text{ lies strictly between 2 and 8")}$$

In roster notation, $B = \{3, 5, 7\}$. Can you express B in other ways using set-builder notation?

Several familiar sets of numbers can be expressed using informal combinations of these notations.

Natural numbers $\mathbb{N} = \{1, 2, 3, 4, \ldots\}$. For instance, $5 \in \mathbb{N}$ but $-3 \notin \mathbb{N}$.

Integers $\mathbb{Z} = \{\ldots, -2, -1, 0, 1, 2, 3, \ldots\}$. For instance, $-4 \in \mathbb{Z}$ but $\frac{4}{5} \notin \mathbb{Z}$.

Rational numbers (fractions) $\mathbb{Q} = \{\frac{p}{q} : p \in \mathbb{Z},\ q \in \mathbb{N}\}$. For instance $-\frac{6}{7} \in \mathbb{Q}$.

Real numbers $\mathbb{R}$. For instance, $\sqrt{2} \in \mathbb{R}$. A formal definition is difficult, though we often informally visualize $\mathbb{R}$ as a *ruler*. *Intervals* are particularly important subsets, e.g.,

$$[-4, \pi) = \{x \in \mathbb{R} : -4 \leq x < \pi\} \qquad \text{(a half-open interval)}$$

The subset relationships between these sets are in the order listed: $\mathbb{N} \subseteq \mathbb{Z} \subseteq \mathbb{Q} \subseteq \mathbb{R}$.
You should also have informally encountered the notion of *irrationality*: for instance, $\sqrt{2}$ and π are real numbers but not rational numbers.

The reason we need this language when discussing functions is that the inputs and outputs of a function are *elements of sets*. Here is a *very* formal definition of function.

Definition 1.4. The *Cartesian product* of sets A and B is the set of *ordered pairs*

$$A \times B = \{(a, b) : a \in A, b \in B\}$$

A *function* from A to B is a non-empty subset $f \subseteq A \times B$ which satisfies the *vertical line test*:

$$\text{For each } a \in A, \text{ there is a } \textit{unique}\ b \in B \text{ such that } (a, b) \in f \qquad (*)$$

Instead of writing $f \subseteq A \times B$ and $(a, b) \in f$, we use the more familiar notation

$$f : A \to B \quad \text{and} \quad f(a) = b$$

To a function $f : A \to B$ are associated three useful sets:

- Domain: $\operatorname{dom} f = A$ is the set of *inputs.*
- Codomain: $\operatorname{codom} f = B$ is the set of *possible outputs.*
- Range: $\operatorname{range} f = \{b \in B : b = f(a) \text{ for some } a \in A\}$ is the set of *realized outputs.*

This probably isn't the definition you should give to 10th graders! How much of this is helpful in a given context? Is it important that *you've* been exposed to this definition?

Example (1.1.2 cont.). We revisit our food-based example in this formal setting. To properly view this as a function $f : A \to B$, we have to carefully label the constituent sets.

$$A = \{\text{Mon, Tue, Wed, Thu, Fri}\}, \qquad B = \{\text{carbonara, fajitas, fish, pizza, pork}\},$$

$$f = \{(\text{Mon, fish}),\ (\text{Tue, pork}),\ (\text{Wed, fajitas}),\ (\text{Thu, carbonara}),\ (\text{Fri, pizza})\}$$

The domain A should be clear, but we had to make a choice for the codomain B: in this case we made it to equal to *range*. Can you suggest a different choice for B? Note how the function is simply the list of ordered pairs (day, food). Try the other examples yourself.

Representing Functions

Functions can be represented in various ways. We illustrate a few in an example.

Example 1.5. We consider the familiar *formula/rule* $f(x) = x^2$ in several contexts.

Table This presentation is most helpful when the domain is very small.

x	-1	0	1	2	3
$f(x)$	1	0	1	4	9

Arrows Also useful when the domain is small. Both this and the table describe f when $\operatorname{dom} f = \{-1, 0, 1, 2, 3\}$ and $\operatorname{range} f = \{0, 1, 4, 9\}$.

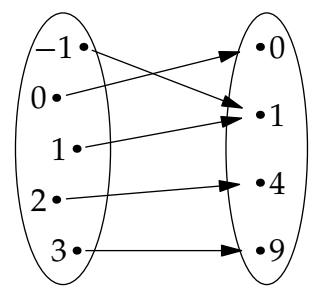

Graph This is the set of ordered pairs $\{(x, x^2) : x \in \operatorname{dom} f\}$. In the context of the formal definition (1.4), *the graph is the function!*

For formulæ whose inputs and outputs are real numbers, two conventions are often observed:

- The domain is *implied* to be all values for which the formula makes sense (don't do silly stuff like dividing by zero!).
- The codomain is the set of real numbers.

If no other information is provided, we'd assume that the formula $f(x) = x^2$ represents a function $f : \mathbb{R} \to \mathbb{R}$, in which case the range (the set of realized outputs) is the interval

$$\operatorname{range} f = \{x^2 \in \mathbb{R} : x \in \mathbb{R}\} = [0, \infty)$$

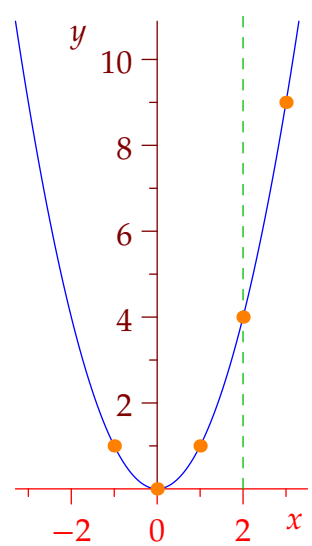

For 'calculus' functions like these, the vertical line test $(*)$ really does involve vertical lines; every vertical line intersects the graph in precisely one point.

In the picture, the dots are the graph when the domain is the set $\{-1, 0, 1, 2, 3\}$ (as described in the table/arrow-diagram).

Can you think of other ways to represent a function? How might your audience influence your choice?

Exercises 1.1. *Key concepts: Function, Domain, Range, Codomain, Representations of Functions, Multiple descriptions/selection*

1. Let d represent the cost in millions of dollars to produce n cars, where n is measured in 1000s. As clearly as you can, explain what is meant by $d(25) = 431$.

2. A movie theater seats 200 people. For any particular show, the amount of money the theater takes in is a function of the number of people n in attendance. If a ticket costs \$25, describe the domain and range of the function using set notation.

3. Temperature readings T were recorded every two hours from midnight to noon. Time t was measured in hours from midnight.

t	0	2	4	6	8	10	12
T (°F)	82	75	74	75	84	90	93

   (a) Plot the readings and use them to sketch a rough graph of T as a function of t.

   (b) Use your graph to estimate the temperature at 10:30 a.m.

4. State parts 1, 3 and 4 of Example 1.1 using the formal language of Definition 1.4. If you have a function, state the domain and range and explain how you know you have a function. If you don't have a function, explain why not.

   (*Since insufficient information is provided, there is no single correct answer!*)

5. (a) Let $A = \{1, 3, 5, 7, 9\}$. Explain in words what is meant by the set

$$B = \{x \in A : x^2 > 10\}$$

   and state it in roster notation.

   (b) Find the set $C = \{x \in \mathbb{N} : (x-1)^2 < 16\}$ in roster notation.

   (c) Find the Cartesian product $B \times C$ in roster notation. Is it the same as $C \times B$?

6. Suppose that $f : \{-2, -1, 0, 1, 2\} \to \mathbb{R}$ is defined by the formula $f(x) = x^3 - 4x + 1$.

   Describe f using a table, an arrow diagram and a graph.

7. Find the implied domain and range (as subsets of the real numbers $\mathbb{R}$) for the functions defined by each rule:

   (a) $f(x) = \frac{x^2-4}{x-2}$

   (b) $g(x) = \sqrt{x^2 - 16x}$

   (c) $h(x) = \frac{1}{x}\sqrt{4x - x^2}$

   (*What is the largest set of real numbers for which the formula makes sense?*)

8. You should be familiar with the Cartesian plane: $\mathbb{R}^2 = \{(x, y) : x, y \in \mathbb{R}\}$. This is the set of ordered pairs, typically thought of as co-ordinates.

   (a) Draw a picture of the set $\{(x, \sqrt{x}) : x \geq 0\}$. Is this the graph of a function? Explain.

   (b) Draw a picture of the set $\{(y^2, y) : y \in \mathbb{R}\}$. Is this the graph of a function? Explain.

   (c) Draw a picture of the *set* $\{(3, 4)\} \times (3, 4)$. Be careful to distinguish between an ordered pair and an interval. Consider how you would explain this to a student.

9. You ask your students to determine the range of the function f defined by the rule $f(x) = x^2$ with domain the interval $[-5, 2]$. You obtain various responses, including $[25, 4]$, $[4, 25]$, and $[-25, 4]$.

   What is going wrong? What is the correct answer, and how would you explain it to your students?

   More generally, if $\operatorname{dom} f = [a, b]$ (where $a \leq b$), what is $\operatorname{range} f$?

10. The unit circle is often represented by the implicit equation $x^2 + y^2 = 1$.

    (a) Draw the circle and explain why the full circle isn't the graph of a function.

    (b) Describe *two* functions $f : [-1, 1] \to \mathbb{R}$ and $g : [-1, 1] \to \mathbb{R}$ whose graphs together comprise the circle. What are the ranges of each function?

11. (a) The differential operator $D = \left.\frac{\mathrm{d}}{\mathrm{d}x}\right|_{x=0}$ can be thought of as a function: $D(f) = f'(0)$ takes as its input a function f and returns its derivative evaluated at $x = 0$.

    Give an example of a function f which does not lie in the (implied) domain of D.

    (b) (If you've done integral calculus) Let I be the integral operator $I = \int_0^x$ whose domain is the set of continuous functions $f : \mathbb{R} \to \mathbb{R}$. Otherwise said, if f is a continuous function with domain $\mathbb{R}$, then $I(f) = \int_0^x f(t)\,\mathrm{d}t$.

    State at least one function that is *not* in the range of I. Explain your answer!