AIR CORED LINEAR MACHINES
FOR GROUND TRANSPORTATION

E Abel, B.Sc, CEng, MIEE

submitted for the degree of PhD

Department of Engineering Science
University of Warwick

September 1981

Volume One of two volumes

To, Diana, who with her consideration, help and thoughtfulness over the past four years has been most responsible for the completion of this thesis.

SUMMARY

The most important areas of interest concerning air cored linear machines (ACLM), their design, development and application to guided ground transportation are presented. A description of the origins of high speed guided ground transportation (HSGGT) is given which covers tracked air cushion vehicle and linear induction motor development, as well as the electromagnetic and electrodynamic systems of levitation.

ACLM began as the favoured propulsion option for the electrodynamic system, and the machine characteristics of the linear synchronous motor (LSM) are discussed with optimization techniques given for choice of wavelength. Stress factors for rectangular coils with tight corner radii can be calculated using a circular coil equivalent.

The linear commutator motor (LCM) provides a means of achieving high local track power density without degrading overall machine performance. Several forms are examined and the trade off and comparison with LSM made. The system comparison of the electrodynamic and electromagnetic systems (EDS and EMS) of magnetic levitation indicates that specifying just lift to drag ratio and specific energy intensity is an insufficient base. Comparison is made of the German EMS and EDS designs, together with a comparison of other groups' EDS vehicles. The German EDS design is found to be heavily penalised by excessive low speed suspension weight.

Several variations of a new type of ACLM using on board flux pumping are proposed. The advantages are that a passive track structure is possible, and a cryogenically cooled winding can be used as a cost effective alternative to a superconducting coil.

Application of ACLM to propulsion of advanced duorail vehicles is set out together with the possibility of speed extension with reduced track wear and initial capital cost, as well as reduced manning and maintenance cost. An Advanced Passenger Train with LSM would appear to be a feasible option for future transport needs, and extension to a low speed urban vehicle using for example liquid nitrogen cooled pool boiling coils would similarly present a low cost system.

An indexed bibliography containing over 400 HSGGT references is included, with a bias to EDS and ACLM.

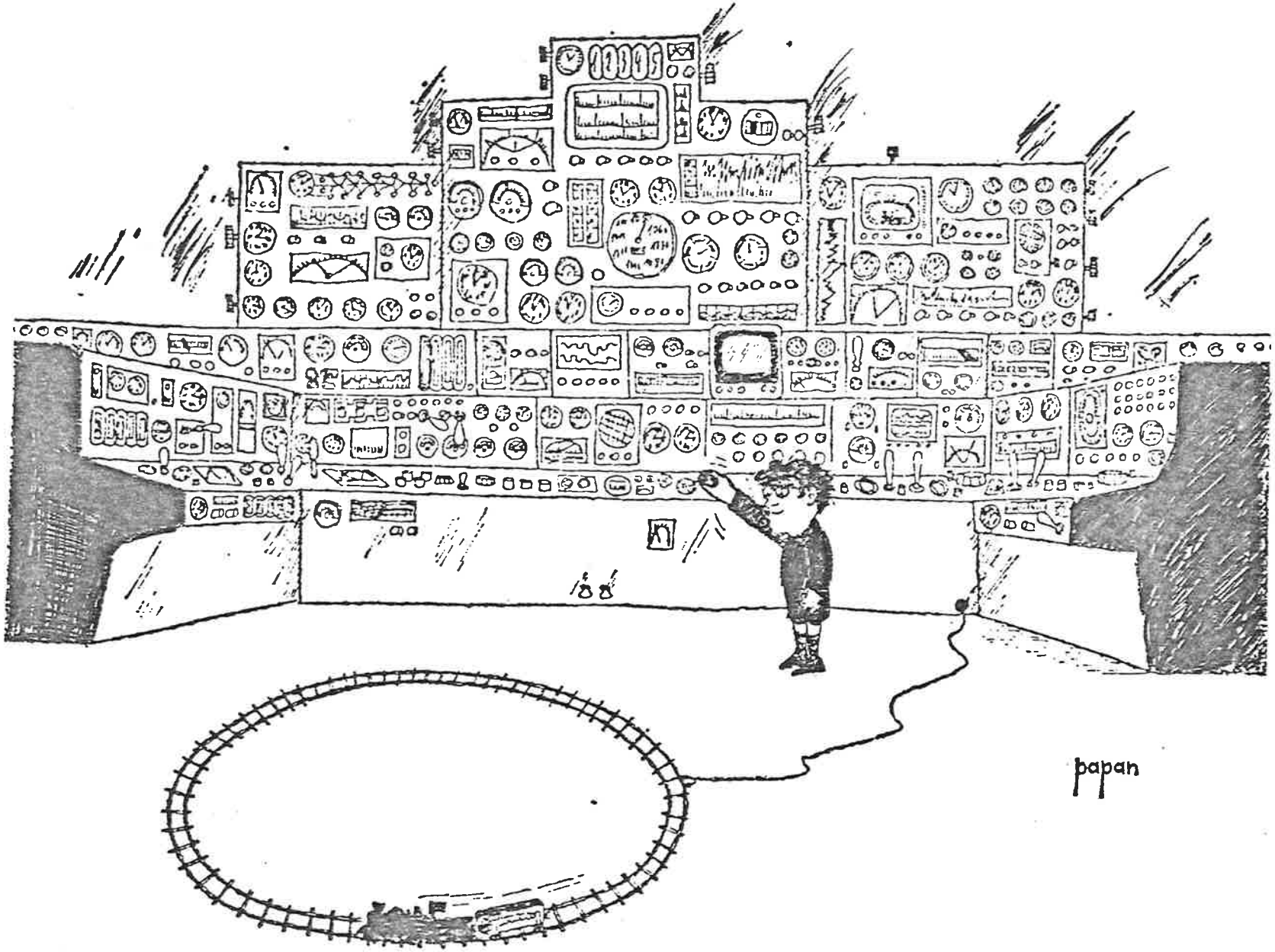
papan

TABLE OF CONTENTS

Page No

VOLUME ONE

SUMMARY iii

ACKNOWLEDGEMENT vii

DECLARATION vii

LIST OF TABLES viii

LIST OF FIGURES ix

LIST OF SYMBOLS xii

ABBREVIATIONS xv

1. INTRODUCTION 1

2. LINEAR MACHINE DEVELOPMENT - AN OVERVIEW 5

2.1 Early Linear Machines 5
2.2 Tracked Air Cushion Vehicles 8
2.2.1 General Considerations 8
2.2.2 American Systems 9
2.2.2.1 UMTA Projects 9
2.2.2.2 FRA Projects 10
2.2.3 Tracked Hovercraft Ltd 12
2.2.4 The Aerotrain 13
2.2.5 Other TACV 15
2.3 The Electromagnetic System of Levitation 16
2.3.1 General Development 16
2.3.2 German Systems 18
2.3.2.1 German Development 18
2.3.2.2 German Test Vehicles 22
2.3.3 Japanese Systems 25
2.3.3.1 Japanese Development 25
2.3.3.2 Japanese Vehicles 27
2.3.4 Other Systems 29
2.3.4.1 UK Development 29
2.3.4.2 American Development 30
2.3.4.3 Russian Development 31
2.4 The Electrodynamic System of Levitation 31
2.4.1 General Development 31
2.4.2 American Systems 33
2.4.2.1 Levitation Research 33
2.4.2.2 The Magneplane Project 36
2.4.3 Japanese Development 39
2.4.3.1 Initial Research 39
2.4.3.2 CSPG 40
2.4.3.3 The Miyazaki Test Line 42
2.4.4 Canadian Research 47
2.4.4.1 Overall Development 47
2.4.4.2 Test Facilities 52

Page No

2.4.5 German Development 58
2.4.6 UK Development 63
2.4.7 French Research 73
2.5 Other Machine Variants 73
2.5.1 Linear Induction Machines 74
2.5.1.1 LIMRV 74
2.5.1.2 Transverse Flux LIM 76
2.5.1.3 ROMAG 77
2.5.1.4 ISPS 77
2.5.1.5 ICTS 79
2.5.1.6 Brush-BR Mickleover Tests 80
2.5.2 Linear Synchronous Motors 80
2.5.2.1 Heteropolar LSM 81
2.5.2.2 Homopolar LSM 83
2.5.2.3 Linear Reluctance Motors 85
2.5.3 Linear DC Motors 86
2.6 Future Near Term Developments 89

3. PERFORMANCE CHARACTERISTICS OF LSM 93
3.1 Equivalent Circuit Representation 93
3.1.1 Basic Requirements 93
3.1.2 Load Angle Derived Equations 95
3.1.3 Current Angle Derived Equations 98
3.1.4 Operation at Minimum S_T 102
3.2 Inductance and Induced Emf Modelling 103
3.2.1 Mutual Inductance 103
3.2.2 Track Inductance 104
3.2.3 Back Emf 106
3.3 Wavelength Optimization 110
3.4 Shape Effects on Coil Stress 113

4. LINEAR COMMUTATOR MOTOR 118
4.1 Original Design Philosophy 118
4.2 Model LCM 121
4.3 Comparison with LSM 123

5. MACHINE ECONOMICS AND SYSTEMS COMPARISONS 127
5.1 The Need for Systems Comparisons 127
5.2 German Maglev Revenue Passenger Vehicles 128
5.3 Maglev Vehicle Weight Breakdown 134
5.4 Specific Energy Intensity 134

6. FLUX PUMPING AND CRYOGENICALLY COOLED MACHINES 136
6.1 Pulsed and AC Operation of Coils 136
6.2 Application to HSGGT 137
6.3 Flux Pumping Motors 138
6.3.1 Components 138
6.3.2 Methods of Coil Energisation 140
6.4 Superconducting Homopolar LSM 142

7. HYBRID APPLICATIONS OF ACLSM 143
7.1 Introduction 143
7.2 Advanced Passenger Train with ACLSM 144
7.2.1 APT Origin 144
7.2.2 Problem Areas in High Speed Running 146
7.2.3 ACLSM Extension of APT Capability 148
7.3 Urban Vehicles with ACLSM 154

Page No

8. CONCLUSIONS 157

9. REFERENCES 160

VOLUME TWO

APPENDIX I BIBLIOGRAPHY 177
1. Scope of the Bibliography 177
2. Books 178
3. Special Issues 178
4. Conference Proceedings 179
5. Indexed Papers List 180
5.1 Papers 180
5.2 Author Index 228
5.3 Corporate Index 236

APPENDIX II SOLENOID MAGNET DESIGN 241
1. Introduction 241
2. Circular Coils 242
2.1 Basic Field and Power Relationships 242
2.2 Off Axis Field of a Finite Solenoid 246
3. Rectangular Coils 247
3.1 Line Filament Solutions 247
3.2 Finite Sections 249
4. Racetrack Coils 251

APPENDIX III DERIVATION OF TRACK INDUCTANCE
1. Introduction 253
2. Track Inductance 254
2.1 Phase Leakage Inductance 254
2.2 Elemental Inductance 254
3. Self Inductance Structure 255
4. Mutual Inductance Structure 258

APPENDIX IV FLUX LINKAGE AND INDUCED EMF IN AIR CORED MACHINES (Reference 222)
1. Introduction 262
2. Derivation of Back Emf Relationships 262
3. Rectangular Coils 268
4. Circular and Racetrack Coils 272
5. Conclusions 273
Appendix. Rate of Change of Flux Linkage for a Rectangular Coil 274

APPENDIX V COMPARISONS OF ALTERNATIVE MAGLEV REVENUE VEHICLE SYSTEMS
1. Reference 134, Electronics and Power 291
2. Reference 135, IEEE Transactions on Magnetics 294

ACKNOWLEDGEMENT

The study of Air Cored Linear Synchronous Machines began as part of the Warwick University Maglev Research Programme, which was largely funded by the Wolfson Foundation. I therefore acknowledge and express appreciation for my association with the project and the other research fellows involved, especially Jeff Howell, Joe Mahtani, and Jan Rakels, and of course the Project Director, Professor Rene Rhodes.

Audrey Poffley deserves special thanks for her diligence and good nature in converting an untidy manuscript into a presentable and ordered document.

DECLARATION

Some of the material contained in this thesis has already been published, both before and since its beginning. The relevant sections are referenced whether they are freely available or Warwick University reports. Mr Mahtani produced some of the calculation embodied in the AMMA paper (Reference 130), but the remainder of the material originates from the author.

LIST OF TABLES

		Following Page No
I	TACV with Linear Motor Propulsion	10
II	German EMS Vehicles	22
III	Japanese EMS Vehicles	28
IV	EDS Test Tracks	38
V	EDS Rotating Test Facilities	40
VI	Linear Machine Test Tracks	75
VII	Linear Machine Test Rigs	78
VIII	Characteristics of LCM Superconducting Coil	122
IX	Magneplane Parameters	124
X	Optimisation Parameters	126
XI	Conceptual Maglev Revenue Vehicles	128
XII	Apparent Efficiency of the German Vehicles	131

LIST OF FIGURES

		Following Page No
1	Linear Synchronous Motor	33
2	Superconducting Paddlewheel	35
3	Superconducting Helix	35
4	Combined System of Propulsion and Guidance	41
5	Power Supply and Control System for LSM	44
6	Split Track	66
7	Claw-Pole Motor	81
8	Heteropolar Inductor Motor	82
9	Aberdeen Transverse Flux Heteropolar Machine	82
10	Kemper's Homopolar Machine with Levitation	83
11	Double Sided HLSM	83
12	Aberdeen Transverse Flux Homopolar Machine	84
13	Homopolar Inductor Motor	84
14	Voltage Fed Equivalent Circuit	93
15	Phasor Diagram for Representative Phase	93
16	Efficiency, Power Factor and Product with Load Angle	97
17	Efficiency, Power Factor and Product with Load Angle	97
18	Current Angle for Minimum S_T	101
19	Efficiency for Minimum S_T	102
20	Power Factor and Product for Minimum S_T	102
21	Terminal Voltage	102
22	Phase Current	102
23	Power Input	102
24	Performance Characteristics of LSM at Cruise	102
25	Mutual Inductance between Parallel Current Elements	103
26	Coordinates for Mutual Inductance	103
27	Armature Winding Representation	104
28	Asymptotic Self and Mutual Inductance	106

		Following Page No
29	Generalised Vehicle and Track Coils	106
30	Field Conventions Adopted for Rectangular Coils	108
31	Neighbouring Coil Contribution to $\frac{d\phi}{dx}$	108
32	Effect of Neighbouring Coils on Rate of Change of Flux	109
33	Thrust per Unit Stator Length x Current	112
34	Optimum Wavelength for Machine Width and Airgap	113
35	Lorentz Forces on Simple Elements	114
36	Balance of Body Forces and Restraining Forces	115
37	Element for Cylindrical Coil Stressing	115
38	Central Field Change for Non Circular Coils	116
39	Tube Equivalents to Radiused Coils	116
40	Fractional Power Loss in Block Sectioned Armature	119
41	LCM, Distributed Progressive Winding	119
42	LCM, Discrete Winding	119
43	Superconducting Model LCM	122
44	Magneplane Characteristics at 504 km/h	124
45	Annual Unit Track Armature Cost	125
46	Optimisation for G and A	125
47	Loci of Optimum G, A, for Different Wavelengths	125
48	Costs as a Function of Wavelength	125
49	Specific Primary Energy Cost of Transport Modes	127
50	Distribution Diagram for the EDS LSM	129
51	Distribution Diagram for the EMS LIM	129
52	Distribution Diagram for the EMS LSM	129
53	Total Active Power of Systems	130
54	Relative System Active Power Requirements	131
55	Total Complex and Active Power of Systems	132
56	Relative System Total Complex Power Requirements	132
57	Subsystem Weight Breakdown (% Gross)	134

Following
Page No

58	Subsystem Weight Breakdown	134
59	Flux Pumping Motor Coil Array	138
60	Methods of Coil Energisation	140
61	Superconducting Homopolar Linear Synchronous Motor	142
62	Power Requirements for APT	148
63	Cryostat End View	149
64	Propulsion Magnet	150
65	APT with Track Winding and Removeable Cryostats	154
66	Mixed μ Suspension and Transverse Flux LSM Propulsion	156
67	The Elemental Loop	242
68	Current Sheet	242
69	Saturation of Current Sheet Central Field	242
70	Finite Thickness Uniform Current Density Solenoid	244
71	Constant Fabry Factor Contours	244
72	Coil Geometry for Thick Coil	246
73	Superposition of Semi Infinite Solenoids	246
74	GMD/AMD for Equal Parallel Rectangles	247
75	Current Element, dl	248
76	Volume Superposition	248
77	Axial Field Variation for Coils	249
78	Normalized Field for Square Coil	249
79	Field for Finite Section Coils	249
80	Field Functions for Infinitely Long Bar	249
81	Field Function for Finite Length Bar	251
82	Field Function for Finite Length Bar	251
83	Race Track Coil Field Components	251
84	Off Axis Field for a Quadrant	251

LIST OF SYMBOLS

a	No of parallel paths per phase; coil radius, m
$a_{1,2}$	Coil inner, outer radius, m
A	Conductor cross section, A/m^2
b	Track half width; coil half height, m
B_o	Central flux density, T
$B_{x,y,z}$	Longitudinal, Lateral, normal flux density, T
C	Bending moment coefficient; annual cost, $/yr-m
$C_{I,c,p}$	Inverter, cable and power cost, $/kVA,kg,kWh
D	End turn coefficient
e	Coil half width, m
$E_{B,T}$	Back emf; terminal voltage, V
F	Fractional phase displacement; Field factor
$F_{B,N}$	Thrust; normal force, N
G	Section Length, m; Fabry factor
h	Coil height, m
H	Optimum coefficient; solenoid field, AT/m
I	Phase current; coil current
$I_{C,F,V}$	Conductor Current, field equivalent current; coil AT, A
I_T	Track peak phase current, A
j	$(-1)^{\frac{1}{2}}$; current density, A/m^2
k	Repayment factor, %
l	Element length, m
L	Track phase inductance, H
$L_{a,e,i}$	Asymptotic, elemental, initial, inductance, H
$L_{G,T}$	Section length, strip self, inductance, H
m	No phases; no elements
$M_{a,i,G}$	Asymptotic, initial, section length, inductance, H
M_A	Per unit length track mass, kg/m
M_{FA}	Field-armature mutual inductance, H

n	No elements
$\bar{n}$	Average vehicle frequency, vehicles/h
N	No poles, no turns
P_A	Per unit length track power loss, W/m
$P_{B,T}$	Mechanical(propulsive), average terminal (active), power, W
P_M	Magnetic pressure, N/m^2
$Q_{B,T}$	Internal, terminal, reactive power, VA
r	Corner radius, m
R	Normalized radial offset; phase resistance, ohms
s	Solenoid inner radius, m; term defined by equation 22
t	Coil thickness, m
$T_c(H)$	Transition temperature, K
v	Velocity, m/s
$\bar{v}$	Average speed, km/h
$V_{1,2}$	Active, reactive, terminal voltage, V
w	Track width, m; loading density, N/m
W	Coil power, W
x	Longitudinal coordinate, m
X	Phase reactance, ohms
y	Transverse coordinate, m
z	Vertical coordinate; levitation height,m
Z	Normalized coil elevation
α	Force, current, angle, radians; coil diameter shape ratio
β	Coil shape ratio
γ	Coil breadth ratio
δ	Coil height ratio
ϵ	Longitudinal offset ratio
η	Efficiency
θ	Power factor angle, radians

λ	Wavelength, m; space factor
μ_0	Free Space Permeability, H/m
ρ	Resistivity, ohm-m
σ	Conductor density, kg/m^3
$\sigma_{r,s,\theta}$	Radial, sheer, hoop, stress, N/m^2
τ	Load angle, radians
ϕ	Flux linkage, Wb-T
$\Phi_{A,F}$	Armature, field, flux, Wb
ψ	Specific energy intensity, J/passenger-km
ω	Angular frequency, radians/s

ABBREVIATIONS

ACLM	Air Cored Linear Machine
ACLSM	Air Cored Linear Synchronous Motor
ACV	Air Cushion Vehicle
AEG	Allgemeine Elektricitas-Gesellschaft
AFLIM	Axial Flux Linear Induction Motor
APT	Advanced Passenger Train
ASEA	Allmanna Svenska Elektriska Aktiebolaget
AVF	Anwendungsnahe Versuchsfahrzeug
AVR	Automatic Voltage Regulator
BBC	Brown Boveri Co.
BMFT	Bundesministerium für Forschungs und Technologie
BR	British Rail
CIGGT	Canadian Institute of Guided Ground Transportation
CIT	Cranfield Institute of Technology
CSL	Canadair Services Ltd.
CSPG	Combined System of Propulsion and Guidance
DCLM	DC Linear Motor
DoE	Department of the Environment
DoT	Department of Transportation
DSLIM	Double Sided Linear Induction Motor
DSLSM	Double Sided Linear Synchronous Motor
EDS	Electrodynamic System
EET	Erlangen Test Carrier
EMS	Electromagnetic System
FET	Field Effect Transistor
FPM	Flux Pumping Motor
FRA	Federal Railroad Administration
FS	Italian State Railways
GE	General Electric Co.
GEC	General Electric Co. Ltd.
GFR	German Federal Railways
GMD	Geometric Mean Distance
HELSM	Heteropolar Linear Synchronous Motor
HFLRM	Hybrid Flux Linear Reluctance Motor
HLSM	Homopolar Linear Synchronous Motor
HSB	Hochleistungsschnellbahn
HSGGT	High Speed Guided Ground Transportation
HSGT	High Speed Ground Transportation

HSGTC	High Speed Ground Transportation Centre
HSST	High Speed Surface Transportation
HST	High Speed Train
ICLSM	Iron Cored Linear Synchronous Motor
ICTS	Intermediate Capacity Transit System
INTERMAG	International Conference on Magnetics
ISPS	Integrated Suspension/Propulsion System
JAL	Japan Air Lines
JIS	Japan Iron and Steel
JNR	Japanese National Railways
LCM	Linear Commutator Motor
LCP	Large Coil Program
LEM	Linear Electrical Machine
LFPM	Linear Flux Pumping Motor
LHP	Lineare Hochgeschwindigkeitsprufstand
LIM	Linear Induction Motor
LIMRV	Linear Induction Motor Research Vehicle
LML	Le Moteur Linear
LRM	Linear Reluctance Motor
LSM	Linear Synchronous Motor
MAGLEV	Magnetic Levitation
MBB	Messerschmitt-Bolkow-Blohm Gmbh
MHD	Magnetohydrodynamics
MIT	Massachussetts Institute of Technology
NRC	National Research Council
NRDC	National Research and Development Corporation
PCU	Power Conditioning Unit
PM	Projectgruppe Magnetschwebebahn
PTACV	Prototype Tracked Air Cushion Vehicle
PWM	Pulse Width Modulated
RANN	Research Applied to the National Need
ROSY	Rotating Synchronous Test Wheel
RTV	Research Test Vehicle
SCR	Silicon Controlled Rectifier
SLIM	Single Sided Linear Induction Motor
SMES	Superconducting Magnetic Energy Storage
SNCF	Societe Nationale des Chemins der Fer
SRC	Science Research Council
SSFP	Semiconductor Switched Flux Pump
TACV	Tracked Air Cushion Vehicle

TARP	Transportation Advanced Research Projects Program
TDA	Transportation Development Agency
TFLIM	Transverse Flux Linear Induction Motor
TGV	Tres Grandes Vitesse
THL	Tracked Hovercraft Ltd.
TLRV	Tracked Levitated Research Vehicle
TMLV	Tracked Magnetically Levitated Vehicle
TSFP	Thermally Switched Flux Pump
TTI	Transportation Technology Inc.
TV	Test Vehicle
UHV	Ultra High Voltage
UMTA	Urban Mass Transit Authority
UTDC	Urban Transportation Development Corporation
VV	Variable Voltage

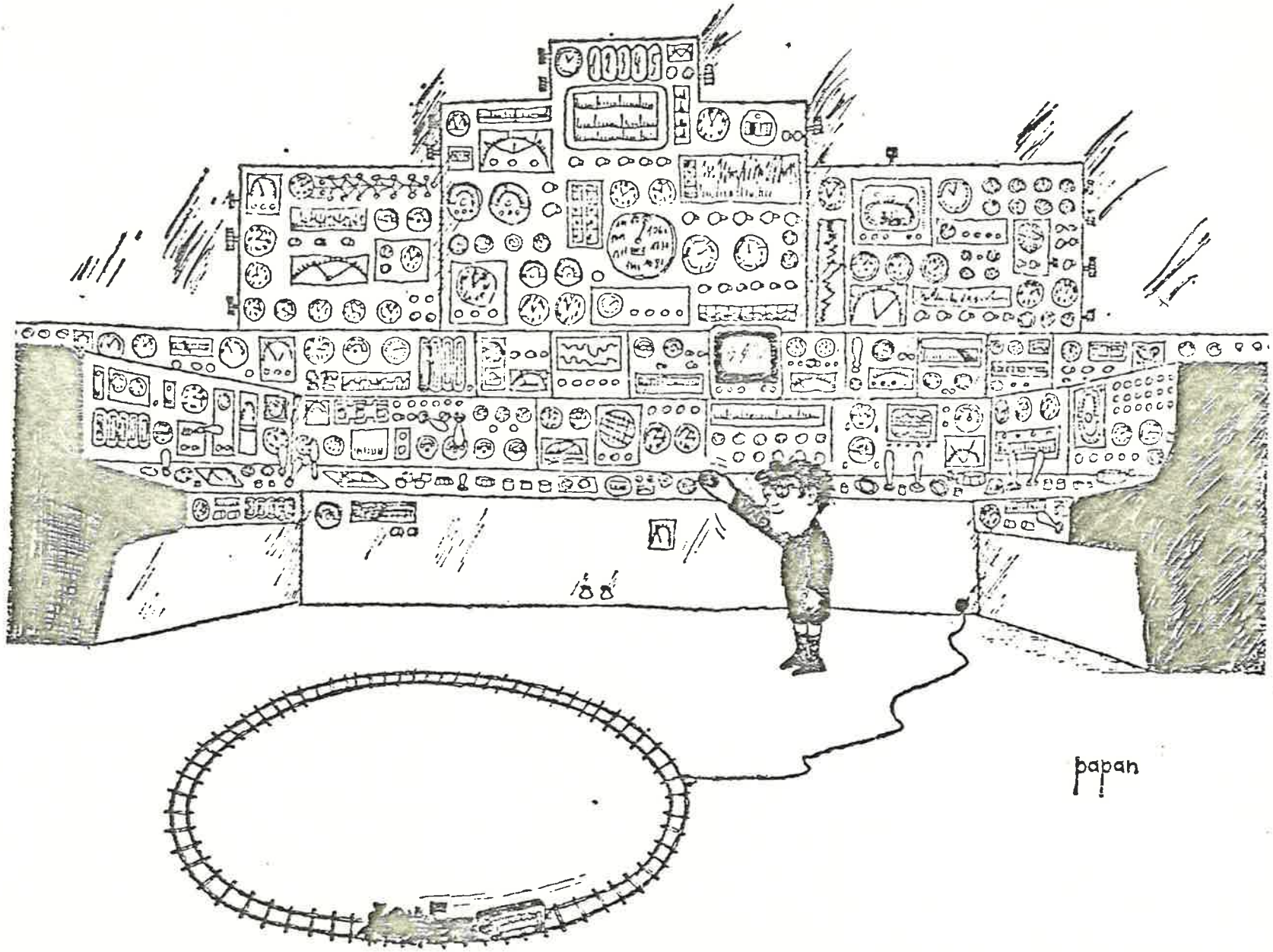
papan

CHAPTER ONE

INTRODUCTION

1. Introduction

The main concepts of high speed guided ground transportation were established at the beginning of this century. It was not until the decade before 1970, however, that several countries began programmes of work to specifically produce tracked systems that could displace conventional wheel-on-rail trains and rival aircraft in centre to centre trip times. The impetus to these programmes was naturally a combination of factors. It was generally acknowledged that intercity trains would soon reach a practical speed limitation accompanied by deterioration in ride quality and increases in maintenance costs from excessive track and vehicle wear. Indeed, to provide very high speed ground transport without a completely new infrastructure would have been impractical. Air travel had reached the state that major new airports would have to be built remote from population centres because of their environmental impact, and this meant an access penalty would have to be paid in the total trip time. Existing air traffic routes, especially in Europe, were approaching saturation, resulting in scheduling and turn around problems for the air lines.

The solution to these problems appeared to be some new form of exclusive surface-guideway vehicle with non-contacting suspension, guidance and propulsion. Preliminary economic studies indicated that for densely populated areas the land acquisition and civil engineering costs dominated the system capital cost, and that the choice of vehicle support became of secondary importance.

Any new system would have to meet the following criteria:

Cruise speed in range 300-500 km/h

Access to city centres

Low specific energy intensity

Reasonable cost

High degree of safety and reliability

Minimal environmental disturbance

Good ride quality

Initially tracked hovercraft appeared to be the ideal candidate for a new system. While large scale prototype vehicles were being built, two alternative schemes were investigated, namely the electromagnetic system (EMS) and electrodynamic system (EDS) of magnetic levitation (Maglev). Both Maglev schemes indicated much better suspension and guidance power densities, and effectively curtailed the air cushion programmes. Linear machine propulsion was considered essential for Maglev vehicles, with the EMS relying on the more mature linear induction motor (LIM) technology, using essentially conventional machine constructional techniques and advances in power electronics.

The EDS required a machine that could operate with an airgap of 200-300mm, so it was not feasible to use a LIM because of the large levels of inductive power that would need to be supplied. Once practical superconductors were being used in rotating machines, it became apparent that linear as well as rotating superconducting machines could be built, and that the use of iron in the magnetic circuit was no longer essential to provide adequate flux linkage between machine windings. The air cored linear machine (ACLM) configuration chosen by the majority of research groups provided air gap magnetization with a superconducting magnet array, and with an air cored polyphase track winding constituted a linear synchronous machine (LSM). Such a machine could transfer power efficiently across the large airgaps with reasonably small levels of power dissipation in the track winding because the equivalent current sheet average values may vary by as much as three orders of magnitude. The machine could also be designed with high power factors, partly because the track is iron free, but also because there is no significant requirement for air gap magnetization to be derived from the power supply unit.

Although a single superconducting field array is the most common arrangement, the ACLM can have topological variation, as can any motor group. The machine can be double sided, laterally transverse, produce force components other than just thrust, or have a track winding that is locally commutated rather than converter fed. The field coils can be cryogenically cooled and need not be superconducting, in some applications. Time varying currents can be fed to the coils to match a variable reluctance track, or the coils can be sequentially switched to produce an induction effect.

With all the variants, common techniques have had to be evolved to cope with design parameter choice and optimization. The superconducting (or cryogenic) winding in particular must be designed so that the electromagnetically produced stresses can be accommodated, and the field profile at the winding cross section and track level can be accurately computed. The track winding must be physically realizable, and must have its primary parameters calculated. If possible the machine should be represented by an equivalent circuit so that performance can be predicted and its sensitivity to parameter change modelled. Finally the machine's interaction with the system's other subcomponents must be analysed, so that the overall vehicle and guideway operation meets required criteria.

This thesis presents the most important aspects of air cored linear machines, as applied to ground transportation. Initially an overview of linear machines and high speed ground transportation is performed, and this is supported by an indexed bibliography as an appendix. The three main types of ACLM are described, and the LSM performance characteristics are detailed.

The philosophy of the linear commutator machine (LCM), which was originally conceived as a short energised section LSM is given, followed by an economic study of full sized systems, including their relationship with long and short stator iron cored propulsion EMS.

The concept behind the linear flux pumping machine (LFPM), which represents a novel class, is described. This machine can be operated in an induction, reluctance or synchronous mode, and could produce significant thrust with unenergised track structure and no power pickup. Because of the operational constraints on the field winding, a cryogenically cooled winding would be the most suitable, although a pulsed superconductor would be the eventual aim. Conventional wheeled transport can also use ACLM to produce enhanced performance in terms of increased speed, reduced capital and maintenance costs. The conceptual design behind such systems is introduced as having realistic potential in providing compact propulsion units for future generation trains.

CHAPTER TWO

LINEAR MACHINE DEVELOPMENT - AN OVERVIEW

2. Linear Machine Development - An Overview

The development of air cored linear machines has been a fairly recent occurence. Largely it has been closely tied to the development of electrodynamic Maglev systems, which in turn rival or complement electromagnetic Maglev and Tracked Air Cushion Vehicles, depending on one's point of view. A balanced overview of linear machine development must sensibly include descriptions of EMS and TACV progress as they represent contributory factors in ACLM development. This chapter provides an account of the main methods of levitation and the linear machines employed, starting with the earliest known linear machines, followed by TACV, EMS and EDS Maglev, and then subsidiary motor development.

Although this development is referenced, a bibliography is included as Appendix I, which lists the majority of these and additional references. The bibliography is arranged to give the most relevant conference and German Statusseminar proceedings, and then over 400 references are arranged in chronological order. Author and author affiliation indices are included to allow cross reference of common publications.

2.1 Early linear machines

The first recorded linear machine was built by Wheatstone between 1841 and 1845, but it was not until 1889 that the first practical linear machine was proposed. This consisted of a 3000 feet long array of solenoids which sequentially attracted a moving car, and was operated for a few months in 1890 by Dolbear and Williams in America. About the same time Wheeler and Bradley(1) were granted patents for a double sided induction machine which used passive iron "inductors" on the vehicle and an ac dynamo feeding the three phase track winding. Around 1901 Rosenfield and Zelenay(2,3) suggested a tangential traction system where rail vehicles could be propelled using a linear induction motor with fixed stator blocks in the guideway.

A little later Zehden[4,5] was granted patents in Europe and America for a double sided linear motor configuration which could be used as a propulsion unit for a steel wheel on rail railway.

A few years on, the Electric Carrier Company[6,7] and Emile Bachelet[8] produced two different schemes for transporting mail. The former scheme, which was developed as an alternative to pneumatic despatch tubes, used three phase current collection to supply moving primary windings with variable frequency. A track secondary was fitted into a one foot gauge duorail, within a three feet diameter tube. Both the driving and the trailing cars were six feet long and had capacities of eighteen cubic feet, their weights being 1250 lb and 1000 lb respectively. A demonstration of the system on a 1000 feet loop test track which incorporated a 100 feet inclined section was performed in Paterson, New Jersey on 25 September 1913, when the cars were each loaded with 200 lb of sand and driven at speeds of 25 mph. The driven car could climb the incline at the same speed, when loaded with 1000 lb of sand.

Bachelet's scheme involved the use of iron cored electromagnets to produce eddy currents for levitation in outboard "Wings" attached to a tubular vehicle. Propulsion could be provided by several means, depending on the application; if the vehicle was in a closed tube, suction could be used, but the preferred method had solenoids placed at intervals along the track which were switched in and out by the vehicle motion. Similarly, only the eight electromagnets directly under the vehicle were energised at any one time, the switch being accomplished by another set of brushgear on the vehicle. Several other configurations were tried, including a single aluminium sheet under the vehicle, and also vehicle mounted coils. Bachelet expected the system to be capable of carrying 500 lb loads at speeds of 300 mph, and initially had no intention of producing a passenger carrying version. When showed in Great Britain the system received a great deal of interest, but

also bad technical reaction. The main objections were that air resistance was thought to provide an insuperable problem, and that the track capital costs would be excessive.

In 1936 Kemper began work in Germany on electromagnetic levitation for European passenger transportation, and built several demonstration models[10]. In 1953 his system was more clearly defined[11] and a three phase propulsion winding was let into slots on the levitation magnet pole face, producing in effect a homopolar linear machine which combined the lift and propulsion functions. The lift magnet produced a transverse bulk flux in the levitation rail, and separate magnets were proposed for guidance. Kemper contemplated a 40 tonne, 20 metre long vehicle running at 250 km/h or 500-1000 km/h in an evacuated tube, requiring about 22MW of power at the top speed. This system formed the basis of further work by Messerschmitt - Bolkow-Blohm Gmbh and Krauss-Maffei AG in the late 1960's.

During World War II, Westinghouse built two linear induction motors called Electropults for launching heavily loaded planes from short runways in the Pacific atolls[12-14]. The largest track secondary was made up of 76 sections 18.2 feet long (a total length of 1382 feet), by one foot wide. The first 55 accelerating sections had four changes in bar resistance to give a near constant acceleration to the plane. Up to 12MW of power were transferred to the moving shuttle to which the plane was attached, through brushgear carrying 7kA. The last 382 feet of track were used to provide dynamic braking with dc injection. A typical launch of a 10,000 lb plane to a take off speed of 117 mph would be accomplished in 340 feet and 4.2 seconds, the shuttle itself being capable of 225 mph. The US Navy continued to use the Electropults for the experimental assisted launch of pilotless and jet propelled planes, after the war.

At the Royal Aircraft Establishment,Farnborough, a 15 metre long linear dc motor was built in 1954[15]. The machine was fed by accumulators with a field power of 25 MVA and an armature power of 4MVA. The armature weight was less than 1 kg, and typical speeds were in the order of 500 m/s. Similar

work was performed by NASA to simulate the effect of meteorite impacts on space vehicles, in 1961.

Also in the 1950's Laithwaite at Manchester University began his work on linear induction machines that provided the stimulus for so much of the subsequent world wide research and development effort on linear machines. Two demonstration test tracks were built, one at Manchester, and a later version funded by the British Transport Commission, at British Railways' Gorton Locomotive Works. The Gorton machine used steel wheels on a duorail track about a hundred yards long, and a double sided primary. The primary was guided along the vertical reaction rail by an auxiliary set of wheels, so that expansion joint misalignment of the reaction rail could be accommodated. With a synchronous speed of 34 m/h the top speed was 30 m/h.

The ensuing development of linear machines became dominated by the high speed ground transportation (HSGT) schemes that were proposed mainly by government sponsorship in France, Great Britain, U.S.A., Germany and Japan. The systems of levitation made different configurations of machines necessary, and the economic pressures indicated that long stator machines would not be favoured, and that high speed current collection would be obligatory. The linear machine had now begun to be an important component in completely different types of transport systems.

2.2 Tracked Air Cushion Vehicles

2.2.1 General Considerations

Tracked Air Cushion Vehicle (TACV) research and development lasted for just over a decade, between 1963 and 1976. As the first of the new levitation technologies it attracted high technology companies such as Rohr, Grumman and LTV in the USA, and with liberal administration,large scale testing of prototype vehicles became the apparent immediate aim. More modest programmes in Europe and Japan were established, and after some years of experimentation it was concluded that alternative levitation schemes showed more promise. The track cross section required horizontal and vertical surfaces to provide the necessary support and guidance, and the three main guideway choices were

the inverted 'T' (or top-hat), the rectangular box, and the U (or trough). The smallest feasible air gaps were in the 3-5mm range, and naturally there was a continual need to replace the suspension air.

The systems achieved near revenue operation and various vehicles carried passengers. Speeds of up to 400 km/h were reached with jet propulsion, and although some vehicles were fitted with large linear machines these were not proved at their full output powers within the projects' duration.

Virtually all work had been concluded by 1976. The technical reasons for project cancellation were that the systems were generally noisy and had high energy demands compared to magnetic suspensions (mainly because the air for support and guidance has to be captured and pressurised). Political decisions to abandon projects in mid term were less tractable; in the UK, THL were closed because there was thought to be insufficient market potential for such systems, and in the USA, all high speed projects were the subject of an executive cut in 1975.

2.2.2 American Systems

2.2.2.1 UMTA Projects

In America the Kennedy administration passed two acts which in effect started off high speed ground transport. The first act, the Urban Mass Transportation Act of 1964, resulted in the establishment of the Urban Mass Transportation Administration and allowed government to provide 67% of the cost of urban transportation equipment. The UMTA financed many schemes which aimed to improve local urban services at essentially low transit speeds, being compatible with existing highway trip times. One particular scheme, that of Transportation Technology Inc (TTI), a subsidiary of OTIS Elevator Co received $1.5m from UMTA to build a demonstration unit for the Transpo 72 exhibition in Washington[16]. The vehicle was supported on air cushion pads and was propelled by a single sided linear induction motor, which allowed a much simplified guideway design through switches. Apart from this demonstration, no permanent installation transpired.

Another UMTA project was the Prototype Tracked Air Cushion Vehicle (PTACV), which allowed Rohr Industries and LTV Aerospace Corporation to produce full sized mockup vehicles for exhibition at Transpo '72. The PTACV was meant to be an urban vehicle for airport access and high density corridor applications, carrying 60 passengers at speeds up to 250 km/hr. Rohr had already expanded from its rapid transit origins by acquiring manufacturing rights of the French Aerotrain, in 1970, and subsequently won a further $1.5m contract to produce an engineering study on a TACV for demonstration at the Pueblo Test Center, Colorado.

In 1972 a further $5m development contract was secured to allow construction of the vehicle. A project involving an Aerotrain link to Los Angeles Airport failed to materialize.

The Rohr TACV structure was mainly aluminium, with roof and sidewalls patterned after the BART cars, using common tooling[17]. The double sided linear induction motor and the power collection equipment were designed and built by Le Moteur Linear (LML), a subsidiary of Merlin Gerin of Grenoble. GEC Traction provided the thyristor control equipment. The motor peak thrust was 45kN and at a top speed of 250 km/h the output power would be about 1.9MW. Vehicle details are given in Table 1. Low speed trials were completed at Rohr's Chula Vista facility in 1974, when it was delivered to Pueblo, the project then coming under the Federal Railroad Administration. Further development and testing were curtailed in 1975.

2.2.2.2 FRA Projects

The High Speed Ground Transportation Act of 1965 directed the Secretary of Commerce "to undertake research and development in high-speed ground transportation". It was felt that in heavily congested travel corridors it was necessary to have a ground alternative to air transport, at surface speeds greater than 300 km/h. Although the North East corridor (Washington-New York-Boston) was the prime route, other links such as San Francisco - Los Angeles were also considered to be the possible congested zones of the near future.

TABLE 1 - TRACKED AIR CUSHION VEHICLES WITH LINEAR MOTOR PROPULSION

		Grumman TACV (TMLV)	Rohr TACV (PTACV)	THL RTV 31	Krauss-Maffei Transrapid 03	Aérotrain S44	Inst.Aeronautics Palermo, IAP03
Vehicle							
Length	m	15.6	28.6	22.1	11.7	14.3	13.2
Width x height	m	3.7 x 4.1	3.4 x 3.4	3.7 x 3.8	2.9 x 2.5	2.2 x 3.2	
Weight	tonne	26	29.6	23	9.6	12	10
Design/Achieved Speed	km/h	480 258	270/232	480/172	140/140	180/180	250/?
Seating Capacity		4	60	0	2	40	
Guideway							
Location		Pueblo HSGTC	Pueblo HSGTC	Earith	Munchen-Allach	Gometz	Trapain-Milo
Type		Trough	Inverted T	Box	Inverted T	Inverted T	Trough
Length Built/ Planned	km	4.8+/35	4.8/8.9	2/5	0.93/0.93	3/3	
Motor							
Type		2DSLIMintandem*	DSLIM	SLIM	DSLIM	DSLIM	SLIM
Manufacturer		AiResearch	LML	GEC	Merlin&Gerin	Merlin&Gerin	
Weight	tonne	2.03		1.95			
Thrust-cont/max	kN	44.4/66.6	22.3/45	2.06/45.6	/29	(140 kW)	
Voltage	kV	0-4.12	0-4.16	0-6.6			
Frequency	Hz	0-165	60	50	50		
Current-cont/max	A	530/700		750			
Cooling		Water	forced air	air			
AirGap	mm	38		30-60			
Reaction Rail							
Material			Al	Al+Fe	Al	Al	
HeightxWidth	mxmm	0.6 x 6.35	0.84 x 44-17				
Pickup							
Voltage	kV	8.25	4.16	0-6.6			
Frequency	Hz	60	60	50			

*Only one DSLIM+PCU built; figures for pair of units +Only 3.5km electrified

The Department of Transportation was formed in 1967 and the Secretary of Commerce HSGGT work was handed over to the Federal Railroad Administration (FRA). In parallel (and relative isolation from) the UMTA TACV work, the FRA funded extensive development and demonstration projects, with the emphasis on TACV and linear induction machines. In 1968 LTV Aerospace teamed up with General Electric to tender for a high speed TACV for the Department of Transportation, but in the event in 1970 the contract went to the Grumman Aerospace Corporation who unveiled their vehicle at Transpo'72 after static levitation tests. The Grumman TACV was originally supplied with three United Aircraft JT 15D-1 turbo fans to give a maximum speed of 200 km/h. Between May and December 1973 the top speed of 147 km/h was reached, limited by 4.8km of track. In the latter half of 1974, the TACV was converted to LIM propulsion, the design and construction being subcontracted to the AiResearch Manufacturing Co division of the Garrett Corporation[18]. AiResearch had already built and tested the Linear Induction Motor Research Vehicle (LIMRV) at Pueblo on 10 km of duorail track, so the TACV LIM and power conditioning unit represented a second generation of design, and incorporated extensive water cooling. Relative power to weight ratios were 1.68 (TACV) and 1.0 (LIMRV) MW/tonne. The other advance was that Garrett had developed a three phase power collection system that had been tested to 500 km/h. This was fed with 60Hz 8.25 kV, and on board conditioning produced variable frequency and voltage for the double sided LIM. A synchronous condenser was used to correct the power factor and keep an ac voltage that could line commutate the inverter. The motor consisted of two tandem units each supplying 33kN peak thrust, 22 kN continuous running to 165 Hz at 480 km/h and 4.12 kV l-n. Table I gives details of the vehicle, guideway and motor.

Static testing of the LIM and PCU was carried out at Torrance between May and October in 1973. By late 1974 the LIM and PCU were installed in the vehicle and initial tests to 100 km/h began on 500m of electrified section. By this time DOT had two large TACV at Pueblo, and renamed the Grumman TACV Tracked

Levitated Research Vehicle (TLRV) on the assumption that it would be used later as a maglev test vehicle. Track testing continued from December 1975 to July 1976 on the 3.5 km electrified section[20].

In 1974 the Transportation Advanced Research Projects (TARP) program was organized within DOT, and in 1975 FRA were forced to turn their attention to more pressing near term railroad problems. The TARP program[21] assumed responsibility for all continued non contact suspension and propulsion technology R and D and began a worldwide reassessment of the work. It was decided to concentrate on technologies that were not receiving attention elsewhere, and to keep abreast of other schemes through interaction with foreign projects.

2.2.3 Tracked Hovercraft Ltd

UK experience of linear motor propelled aircushion vehicles centred on Tracked Hovercraft Ltd (THL)[22]. THL was formed as a subsidiary of NRDC in September 1967 to explore the possibilities of air cushion suspension and LIM propulsion for HSGGT. From the start the program attempted to foresee the problems that would arise with a Revenue Vehicle, and incorporate possible solutions in the test vehicles and rigs. Fairly early on a commitment was made to an all electric vehicle since this was thought to be less intrusive on the environment, and a rectangular box section track was chosen as being the simplest guideway element that could provide adequate lateral and vertical stiffness, and be self clearing of debris.

The motor choice in 1969 was for a single sided axial flux linear induction motor, rather than a double or sesquisided version. Work at Imperial College suggested that a transverse flux machine might be possible eventually, after some initial tests, and this showed advantage in that a larger pole pitch lighter core weight configuration would be possible. Two test vehicles were planned that could run on a elevated box track which would accommodate different designs of reaction rail. RTV22 would run at 240 km/h on pneumatic tyres and test the motor and current collection equipment; RTV31 would have air cushion support and guidance and reach 480 km/h. As work proceeded,

RTV31 was built first and made its first run in December 1971, and finally reached a top speed of 171 km/h on only 1.9 km of track, in January 1973. RTV22 was held back as a possible test vehicle for a large scale transverse flux LIM. A 1/5 scale model was constructed by Linear Motors Ltd and tested on a 90m track and model test vehicle RTV41, but the full sized motor was never built.

Towards 1973 THL attempted to evaluate alternative suspension systems, such as EMS, EDS, and Laithwaite and Eastham's Magnetic River Transverse Flux LIM. NRDC spun out one year's funding over two years, and in February 1973 the project was closed completely, before the remaining track sections were erected and RTV31 could reach its design speed.

2.2.4 The Aérotrain

Jean Bertin was responsible for the most organised and technically successful TACV program. Air cushion vehicle studies began at Société Bertin in 1957, and a systematic development of the Aérotrain was undertaken from 1961. After patents were taken out in Britain and France in 1962, Bertin formed Société de l'Aérotrain in 1965 to specifically develop and promote air cushion vehicles. The first two vehicles were half scale models to allow comparisons to be made to calculations before proceeding to full size vehicles.

Aérotrain experimental 01 started tests in December 1965 and reached its design speed of 200 km/hr on its fifth run. In the next two years it reached up to 345 km/h with an improved suspension and additional boosters.

Aérotrain expérimental 02 was designed in 1967 and 1968 to establish air cushion behaviour at high speed, especially at the supercritical speeds when the ram air pressure exceeds cushion pressure. In 1968, it reached 390 km/h with a 12 kN thrust PWA JT12 turbojet, and in January 1969 reached 422 km/h with an additional 5 kN thrust from a solid propellant rocket. Both of the test vehicles ran on an inverted T track 6.7km long at Gometz la Ville near Paris.

The Paris Air Show in July 1969 saw the first public display of the Aerotrain I-80 "Orléans",an 80 passenger full size prototype vehicle initially driven by ducted propeller. The test track was laid along the line of a prospective route from Paris to Orleans, and was an 18 km long elevated inverted T structure. Between 1969 and 1971 the vehicle regularly reached 260 km/h, and by 1972 had logged 710 hours of operation and carried 10,000 passengers. After fitting with a Pratt and Whitney PWA JT8D turbofan, the Orléans reached 430 km/h in 1973. An extensive program of trials was concluded in 1975.
A fourth vehicle, S-44, was built and tested from 1969 at Gometz on a new 3km track built alongside that used for 01 and 02. This was also a full sized vehicle, designed for suburban rather than intercity use. It held 40 passengers and in 1973 exceeded 170 km/h. The double sided 400 kW LIM was built by Merlin and Gerin.
Results from the full sized test vehicles prompted the French Government to authorise a 24 km demonstration LIM propelled system that would link the new town of Cergy-Pontoise and the office complex at La Defénse in suburban Paris. The proposed vehicle would have been a bidirectional twin unit train travelling at 180 km/h and could also have had intermediate sections for increased traffic density. The scheme lost Government support in 1974[24].
A final vehicle, the Tridim Aérotrain was designed to suit urban traffic where station spacing was between a few kilometres and several hundred metres. Propulsion could be either LIM, friction drive or rack and pinion. Anticipated cruise speeds ranged from 40-80 km/h, and the system used a relatively simple track structure. The ability to tolerate sharp bends and steep slopes was the source of the name Tridim, for three dimensions[24,25]. Vehicle capacity could vary between 4 to 100 depending on the traffic requirements. A four/six seat prototype was run on a 300 metre test track in mid 1973, which incorporated a 20m radius bend, 10m curve switch and 20% slope, and demonstrated the cheap steel pipe structure used for track support.

Société Bertin continued work on dynamic noise measurement of jet engines at Gometz, where a GEJ85 turbojet replaced the PWA JT12 on the Aérotrain 02, and in conjunction with SNECMA* this noise research program continued between 1974 and 1976[26]. Further part funding of Guimbal's LIM work at Merlin and Gerin in Grenoble continued, but no significant developments matured within the Aérotrain program.

2.2.5 Other TACV

Germany, Italy, Japan and USSR all had experimental TACV running. Krauss Maffei A.G. built a 930m inverted T dual purpose test track to permit comparison trials between magnetic levitation and air cushion vehicles. The EMS vehicle, Transrapid 02 had its first public demonstration in October 1971, and in the autumn of 1972 Transrapid 03, the ACV began comparison tests. The double sided LIM was built by Merlin & Gerin and had a maximum thrust of 29 kN. The ACV tests were successful, but the comparisons indicated that EMS had clear advantages. Further work was halted in the beginning of 1974 in mutual agreement with the Federal Ministry of Research and Technology (BMFT), who provided the funding. Table I shows outline details of the vehicle and track.

Italian work was based at the Institute of Aeronautics at the University of Palermo. They built two experimental TACV in the course of their research program, which began in 1967. Both vehicles only ran at low speeds, the first, IAP 2 was fitted with a propeller, and the second, IAP3, a single sided LIM, to allow better switching. Trial runs of IAP3 were held on a trough track at Trapain-Milo Airport in Sicily in 1972. The Institute then concentrated on magnetic levitation and linear motor propulsion.

Japanese National Railways began looking at new types of HSGGT systems as early as 1962. Initially they were concerned with LIM propulsion systems, but also considered TACV[27]. The effort was superceded by their commitment to EDS.

*Société Nationale d'Etude et de Construction de Moteurs d'Aviation, Paris

Russia apparently had two separate projects on ACV; one run at the Institute of Internal Combustion Locomotive Engineering near Moscow developed a diesel engined TACV, and at Kiev, a LIM propelled vehicle was built and tested.

2.3 The Electromagnetic System of Levitation

2.3.1 General Development

The concept of providing contactless levitation by controlling the current in a dc magnet attracted to a steel guideway to maintain a constant gap, was first proposed by Kemper in Germany. EMS Maglev was subsequently researched and developed in Germany and Japan, and to a lesser extent in the UK and USA. The major division in effort was whether EMS was to be applied to high speed intercity or low speed urban transport. Germany and Japan largely chose high speed applications,whereas the UK and the USA chose urban vehicles as most suited to their particular requirements.

In America, early analysis of transport modes that might be applied to the Northeast Corridor suggested that High Speed Ground Transport (HSGT) alternatives only showed advantages (in operating costs) over air travel when the range was up to about 650 kilometres, and no allowance was made for the cost of passenger time[28]. If a premium was put on passenger time, this dropped to around the 300 km level[29]. No attempt had been made to account for the large capital costs required to implement a HSGT scheme, and so development had no particular aim following Federal withdrawal in 1975.

European population densities and existing use of transport modes differ significantly from the USA patterns. In Western Europe roughly 50% of the distances between major cities are below 300km[30,31]. Also any increase in traffic densities in air or road transport incur environmental penalties. The modal split has been such that over the last two decades railways have had their market share progressively decreased. In an attempt to redress the balance and evolve an acceptable transportation system preliminary studies indicated that HSGT could in fact be a viable alternative in a European context[32]. The German Government through BMFT began a

broad spectrum development program which investigated the three main methods (TACV, EMS and EDS) of HSGT, with the objective of identifying the most suitable system.

Krauss Maffei and Messerschmitt-Bolkow-Blohm both began work on EMS test vehicles and together with the EDS researchers produced designs for an "Anwendungsnahe Versuchsfahrzeug" (AVF), or prototype experimental vehicle that could carry 200-400 passengers at speeds of 400-500 km/h[33-35].

It was planned that these vehicles would be built and tested at a major test facility in Donauried, but as the development continued, it was decided to opt for one system. After an exhaustive comparison of the rival designs,[36,37], it was decided on 8 December 1977 to develop only the EMS Maglev, and to construct a test facility at Emsland in North Germany for testing to 400 km/h. The EDS study was successfully completed, and work on the superconducting LSM continued with track tests at Erlangen.

The Japanese EMS research began as an in-house development at Japan Air Lines, who were investigating ways of reducing city centre to airport access times. Starting from essentially a Krauss-Maffei configuration, two test vehicles were built,and design of a pre-production prototype has begun. This project, together with a low speed EMS program and Japanese National Railways EDS research have been combined under the charge of the Ministry of Transport who will directly fund future developments[38].

American effort in the low speed EMS was limited to work performed at Ford, MIT and Mitre on dynamic test rigs, and a vehicle built by General Motors at Detroit. Under the Transportation Advanced Research Projects (TARP) program an American and German Cooperative Project investigated the vehicle and guideway dynamics to establish limits for roughness and flexibility[21].

The KOMET test vehicle was used to provide data over its guideway which could have its flexibility changed by removal of supporting piers.

The UK development began with research undertaken by Jayawant at Sussex University, and this was followed by an independent study performed by

British Rail who were indirectly Government funded. Both groups built operational development vehicles that could carry passengers for demonstration.

EMS Maglev has been the prime application of linear induction motor research. Although JAL still plan to use LIM propulsion for 300 km/h, the German effort has switched to an iron cored linear synchronous motor with a track stator. The ICLSM can also provide substantial lift and guidance forces, and was chosen for both the Hamburg and Emsland vehicle designs. A final choice on whether all of the three main functions of levitation, guidance and propulsion are to be economically achieved with the ICLSM has yet to be made.

2.3.2 German Systems

2.3.2.1 German Development

As previously mentioned, Kemper began work on EMS Maglev in the mid 1930's in Germany. It was not until the second half of the 1960's that Krauss-Maffei and Messerschmitt-Bolkow-Blohm (MBB) began detailed systems appraisal and decided to develop a Maglev based high speed ground transportation system. Both companies built test rigs for levitation and linear machine experiments, and began building linear test tracks with medium sized vehicles.

In 1969 the German Federal Minister of Transport commissioned a wide ranging study of the economic and operational management aspects of high speed transport from the Hochleistungsschnellbahn-Studiengessellschaft mbH (made up of German Federal Railways, STRABAG and MBB)[39]. The "HSB Study" conclusions were that such new systems as Maglev could operate economically, and this prompted the Federal Government and Industry to increase the development effort. The Federal Ministry of Research and Technology (BMFT) provided the majority of funding for the test vehicles' program, and in the same year Krauss Maffei presented the first electromagnetically levitated functional model with linear propulsion, Transrapid 01 which weighed about 3 tonnes and ran on a 40m track at 36 km/h. MBB followed by producing the

first passenger carrying vehicle, the Magnetmobil in 1971. Various other vehicles followed from both companies (see next section) and in 1974 Krauss-Maffei and MBB combined their Maglev research and development activities into the one company of Transrapid-EMS. Other firms such as Rheinstahl (Thyssen Henschel), Krupp, as well as TU Braunschweig were actively connected to the company.

As research and design studies continued for large vehicles with maximum speeds of 500 km/h, it became apparent that the use of the single sided axial flux LIM posed special problems. The motors needed to be about 6 metres long to counteract end effects, and would run at air gaps of about 20mm. Because of the low power factor-efficiency product the on board power converter was large even though a heat pipe cooler was developed. The volume constraint was such that at 400 km/h there was virtually no space for a pay load. The thrust power also had to be transmitted to the vehicle, and this proved to be problematic; copper plated aluminium rails with current pickup had unsatisfactory brush wear, and current arc transmission suffered from excessive arc voltage drop and electromagnetic radiation interference. Weh at TU Braunschweig investigated the iron cored linear synchronous motor with a long stator in about 1973, and in the next year the Rheinstahl Company built a 100m track and vehicle which combined long stator LSM propulsion and lift functions. Weh also built a difference flux version of the integrated lift and propulsion LSM on 30m of track at Braunschweig.

Following on the development of Transrapid 02 and 03, and a Magnet Test Vehicle at Ottobrunn propelled by a hot water rocket, Krauss Maffei as part of Transrapid-EMS constructed Transrapid 04 at Munchen Allach. The vehicle was propelled by a double sided horizontally mounted LIM along a 2.4km elevated guideway. MBB built another hot water rocket propelled component test vehicle KOMET on a 1.3km track at Manching[40,41]. The Lineare Hochgeschwindigkeitsprufstand (LHP) was meant to test components of EMS and LIM up to 400 km/h. As well as having a rigid body frame to which the

magnets for support and guidance were fixed, the centralized on board computer system allowed control system configuration and control parameter change by modification of software. Vehicle test data could be PCM coded and telemetered to a ground station, and an instrumented test rail was included in the track.

The second version of KOMET included a decentralized hierarchical control system for the magnets. KOMET-M embodied two magnet bogies connected through a secondary suspension to the cabin, and to the six independently controlled support magnets through the primary suspension[42,43]. This system was known as the Magnetic Wheel since the modular mechanical and electrical structure closely mimicked wheeled independent suspension. Its advantages were that a more consistent force profile for in line magnet systems was possible, track tolerance could be relaxed, and the levitation height could be reduced (resulting in lower power requirement in the magnets).

In 1977, the HSB Studiengessellschaft cooperated with the Federal Railway to compare track investment costs of a Maglev system and a conventional new railway track[44]. Since the Maglev system did not rely on wheel friction for traction and braking, steeper gradients were possible, and since guidance forces could be controlled, tighter radii also became possible. Route tracing virtually at-grade construction, or on elevated track as opposed to the traditional tunnel-cutting-viaduct working meant that the Maglev system compared most favourably with steel wheel or steel rail infrastructure cost.

At the end of 1977, the BMFT decided to concentrate entirely on EMS Maglev, and the EDS group members (BBC, Siemens and AEG) combined with Transrapid-EMS to form Konsortium Magnetbahn Transrapid. Siemens continued work on the air cored LSM and converted ther Erlangen test track from LIM to LSM propulsion, and the track tests began in 1979. The Konsortium built the demonstration vehicle Transrapid 05, the "IVA-Bahn Hamburg" for the International Traffic and Transportation Fair in Hamburg in June 1979[45,46]. The vehicle

used Magnetic Wheels and Weh's iron cored long stator LSM as a propulsion and lift unit, and was in public operation for 12-14 hours daily from March to July 1979 with only one minor breakdown.

Large scale testing of pre-production vehicles has always been an aim of the BMFT. Initially a full size system comparison was to be made between steel wheel on steel rail, EMS and EDS vehicles at a Test Center in the Donauried Area of Bavaria. A large complex with 75km of track and 500 km/h test vehicles met local environmental opposition, and the BMFT finally chose a site in northern Germany at Emsland[47,48]. By this time work on EDS was concluded, and although initial plans were to provide an adaptable track and vehicle to accept LIM, Air Cored LSM as well iron cored LSM, the eventual choice was for the integrated EMS and iron cored LSM long stator propulsion. The definition phase began on 1 July 1978, and later in that year construction began. It is expected that the active test program should begin in 1982.

Work on urban vehicles has been overshadowed by the high speed program. Krauss Maffei produced a system known as Transurban-TAKT in the early 1970's[16,49]. This system which used EMS levitation and single sided LIM propulsion was chosen by Toronto to be their new urban transportation mode. Difficulties were encountered with excessive vehicle weight, unexpected interaction of the LIM and EMS forces and switch transitions on the guideway. The German Government also withdrew support from Krauss Maffei as it was thought at the time that there was insufficient need for new urban systems, and Krauss Maffei withdrew from the contract and paid a penalty fee.

Siemens have produced a wheeled system propelled by synchronous linear motor called H-Bahn. A demonstration elevated track vehicle exists at Erlangen. Weh also has a demonstration vehicle and track at TU Braunschweig called Magnetbahngesellschaft (M-Bahn) which uses ICLSM long stator drive with excitation assisted with permanent magnets[50].

Residual forces in levitation are taken up by small diameter plastic wheels. AEG are involved in the commercial application of Magnetbahn. Weh continued to refine the combined levitation and propulsion system and produced design variations using permanent magnets to provide the bulk of the static forces[51,54]. The immediate advantage of this technique is that the control power is reduced. Transverse flux guidance controlled permanent magnets with very small power loss in a mild steel strip rail have also been considered.

2.3.2.2 German Test Vehicles

MBB were the first to present a passenger carrying vehicle, on 7 May 1971, when their Magnetmobil carried eight people on a 660m test track at Manching[55]. The vehicle was supported by eight levitation magnets and four guidance magnets, driven by three phase SCR controllers. The propulsion was by a vertical aluminium reaction rail and double sided LIM, which produced about 200 kW of power and a top speed of 90km/h. The Magnetmobil tested rigid body control stratagies and general feasibility of EMS levitated vehicles. Details of this and subsequent vehicles are given in Table II.

Krauss-Maffei's first passenger carrying vehicle was displayed on 11 October 1971 at a 930m test track built near München Allach. It used 16 U shaped magnets which provided both levitation and guidance against a U shaped rail, the magnets being laterally offset to give guidance. The vehicle weighed nearly 12 tonnes and the track incorporated an 800 metre radius curve. Propulsion was with a double sided vertical rail LIM built by AEG which ran at fixed supply voltage and frequency. The Transrapid 02 track also accommodated the air cushion vehicle Transrapid 03, and as discussed in 2.2.5 comparison trials were completed. TR02 could be controlled remotely, and its top speed of 164 km/h was first reached in early 1972.

TABLE II GERMAN EMS VEHICLES WITH LINEAR MOTOR PROPULSION

		MAGNETMOBIL	TRANSRAPID 02 TR02	TRANSRAPID 04 TR04	TRANSURBAN TAKT TU02	KOMET LHP	HMB2	LSV 301/2	TR05	TR06
Vehicle										
Length	m	7.6	11.7	15	6	8.5	5		26	54
Width & Height	m	2.1 x 1.8	2.9 x 2.9	3.4 x 2.8	2 x 2	2.5 x 1.7				3.8 x 3.7
Weight	tonne	5.8	11.3 + 2	18.5		8.8+	2.5	2.2	36	102 + 20
Maximum speed	km/h	90	164	253.2	70	360*	36	25	75	400
Seating capacity		8	9	20	12	-	-	-	68	200
Guideway										
Location		Ottobrunn	München Allach	München Allach		Manching	Kassel	TU Braunschweig	Hamburg	Emsland
Length	km	0.66	0.930	2.4		1.3	0.1	0.03	0.908	31.5
Motor										
Type		DSLIM	DSLIM	Horizontal DSLIM	SLIM	LIM*	Iron cored LSM+lift	Difference flux ICLSM+Lift	ICLSM+ Lift	ICLSM+ Lift
Manufacturer		MBB	AEG	(1) (2) AEG						
Type No			LAM d 14950	LAD,12, 220/5						
Weight	tonne	0.8	1.26	3.36 4.88	0.65	0.42				
Thrust	kN	10	31	40 70	13	2.25			28	85
Voltage	kV	0.38	2.6	3.5	v.v	0-1.1		380	1.17	4.15
Frequency	Hz	50	50	50	v.f	0-160		0-100	0-200	0-215
Power	kVA	200kW	5,000	6,200				100	580kW	7,000
No of Poles			5	6 7	9	5				
Pole Pitch	m		0.52	0.61 0.815		0.384		0.3		
Length	m	2	2.84	3.66 6	2.65	1.8				
AirGap	mm	32	47					15		
Synchronous Speed	km/h		186	440						

*Linear Motor Test Unit top speed 360km/h;
Main propulsion unit Rocket Sled DANIEL
Max speed with sled 401.3 km/h

MBB built several hot water rocket propelled test vehicles. The first vehicle at Ottobrunn was operational by 1972 and ran up to 225 km/h over instrumented test rails in the 660m Magnetmobil track. Different magnets and sensors could be incorporated into the basic test frame. MBB then built a new facility and used a hot water rocket sled "DANIEL" which was automatically disengaged from the component test vehicle "KOMET" after travelling 300 metres. KOMET then passed through 300 metres of highly accurate track and then was automatically braked in the final 700 metres. With accelerations of up to 4 gee's available, the top speed of 401.3 km/h was recorded on 19 February1976, two years after the system was built[40]. The main frame carried 10 levitation and 8 guidance magnets and had available 2.5 tonnes payload for a test object support frame. A 5 pole linear motor test unit was run at speeds up to 360 km/h. In 1977 KOMET was rebuilt to accommodate a modular system of magnets with decentralized control and independent primary suspension.

Krauss Maffei began building Transrapid 04 in 1973. The guideway was elevated and various constructional techniques tried out. The full length of 2.4km included 800 metre and 3.1 km curves with a straight central section over which top speeds of 250 km/h were reached The vehicle was 15 metres long and weighed 18.5 tonnes. It had 20 seats and guidance and levitation was accomplished with 23 magnets. The propulsion was with a horizontally mounted double sided LIM, and two motors were tried out. The AEG machine was Gramme ring wound and incorporated substantial damping cages around the back iron to screen out the leakage fields. Maximum thrust was 70 kN from the 6 metre long motor, which had a design synchronous speed of 440 km/h.

HMB2 was built largely by Thyssen-Henschel at Kassel, in 1974, and became operational in early 1975. The final vehicle weighed 2.5 tonnes and accelerated up to 36 km/h in the first 60 metres of a 100 metre track. Thyssen examined the economics and production techniques required to

fabricate the long stator packets, and how to automate the winding process[56]. The combined lift and propulsion iron cored LSM stator was made in two parallel runs at the track gauge.

HMB2 had resulted diectly from Weh's work at Braunschweig[57-59]. His first experimental model was a 42kg vehicle running on a 10 metre track. A much larger experimental model LSV 301 was built with a full sized guideway and a double air gap stator system with one air gap inclined (the difference-flux system). This gave combined lift, propulsion and guidance in one system. The 2.2 tonne vehicle reached a top speed of 25 km/h on the 30 metre indoor track. The vehicle was operational in November 1975 and was later given an individual spring and damper suspension for each of the four corner magnet sets. The renamed LSV02 used linear bearings in the suspension to avoid tilting the pole faces, and also spring and dashpot suspension were included for lateral motions.

The combined lift and propulsion iron cored long stator LSM became the eventual choice for the TR05 vehicle at Hamburg. The track was 908 metres long and a top speed limit of 75 km/h was legally required. The machine gave a thrust of 28kN (570 kW at 73 km/h) and was fed by a 0-200 Hz inverter. This system will also be used for the Emsland vehicle TR06 where 85kN thrust will propel the 122 tonne vehicle to over 400 km/hr. On board power requirement for the magnets will be provided by a linear generator, which picks up the stator slot harmonics in two phase pole face windings and is rectified to top up a battery conditioning unit above about 30 km/h. Batteries provide all the on board power below this speed.

Krauss Maffei's Transurban-TAKT system was propelled by a 650 kg single sided 9 pole LIM which had an iron backed aluminium reaction rail[60]. A variable voltage, variable frequency inverter was used for the motor supply and the vehicle had a top speed of 70 km/h. Testing began in 1973, and a 8km track was planned for Toronto. Ironically, TAKT was meant to signify the rhythmical operation of the system running at 30-40 second headways.

2.3.3 Japanese Systems

2.3.3.1 Japanese Development

As with German development both high speed intercity and low speed urban transport systems have been examined. Japan Air Lines (JAL) have been the principal organization concerned with a High Speed Surface Transport (HSST) scheme, and have been largely funded both directly and indirectly by the Japanese Government. A low speed system was funded directly by the Ministry of Transport and coordinated University and Industry research[61].

JAL formed a special unit to plan and research the development of HSST as early as 1971[62-64]. The main reason behind the project was growing awareness of the increasing times required to reach out of town airports from the centres of population, in an environmentally unobtrusive fashion. There were two major town-to-airport links that JAL had in mind. The first was the New Tokyo International Airport at Narita,some 66 kilometres away from central Tokyo, and 80km away from the domestic Airport at Haneda. The second was between Chitose Airport and the city of Sapporo, on Hokkaido. Because of the high traffic density on the Narita-Tokyo Expressway,the travel time may be two hours to and three hours from the airport. Chitose does not have a high traffic density problem but the roads are inadequate and the 40 kilometres may take over an hour. The intercity trip might take therefore, allowing up to an hour from Tokyo to Haneda, perhaps five hours, with only one hour 40 minutes in the air. The rail trip by the new Japanese National Railways (JNR) Shinkansen extension is only six and a half hours, so air flight has only minimal competitive advantage.

During 1973 JAL evaluated the various schemes being developed worldwide, and initially expected to only have to license a particular system. It was decided, however, to pursue an in house development using the aerospace technology and expertise available within JAL. In the next year an experimental vehicle was designed by the JAL Engineering Centre at Haneda Airport, and on 22 December 1975 the two seat test vehicle HSST-01 was first tested on a 200 metre track at Sugita, near Yokohama. The levitation configuration chosen was the offset pair

of inverted U shaped magnets reacting on a U rail developed by Krauss-Maffei. The propulsion unit was a single sided LIM with a thrust of 3.4kN. Maximum speed was limited by the track length to about 35 km/h, and it was decided to build a longer 1.3km track.

In 1976 the new track was constructed on reclaimed land at Higashi Ogijama, a man made island in the Kawasaki area of Tokyo Bay. The site was subject to subsidence and allowance was made for adjustment to the longitudinal beams; maximum sinkage was about half a metre in the first year. In 1977 HSST 01 began running on the new track and reached a top speed of 219.3km/h with the LIM propulsion. Addition of rockets to boost the acceleration when the vehicle reached 150 km/h under the LIM meant that over 300 km/h could be reached in the 1300 metres. The top speed of 307.8 km/h was reached on 14 February 1978.

A second vehicle HSST-02 was built and tested in January 1978 for the first time. It used the same track as HSST-01, and could carry up to eight passengers and one driver, at speeds to 100 km/h. Several thousand members of the public have been given demonstration rides.

Towards the end of 1978 and into 1979 the test track was reconstructed past the 900 metre mark to include two curved and banked sections. The curve radii were 2 kilometres and 280 metres, and the total track length became 1.6 kilometres. In March 1979 both vehicles were successfully tried out on the extended track. HSST-01 and -02 had run 850 and 1500 km by May,respectively. LIM only propulsion on HSST-01 produced a top speed of 236.8 km/h in April 1979. Substantial Government funding allowed JAL to proceed with the design of an 80 seat prototype of an operational vehicle, HSST-03, which has the same cross section as the production vehicle, but is double headed and shorter. This will be tested at 300 km/h on a 15km test track. So far a full size mockup has been built(65), and a further 20 billion yen is required to complete the development into engineered hardware.

Although the application of HSST by JAL was originally for airport to city centre links, the intercity link is beginning to feature in their philosophy as a replacement for conventional railway systems.

In 1974 the Ministry of Transport began a special project to develop a low environmental pollution railway and concluded after some study, that the EMS of supporting a vehicle showed most promise. The main purposes were to produce a system with minimal noise and vibration, and negligible air pollution. Having set up some baseline design characteristics such as 120 km/h speed for a 10 car train with minimal headways of 2 to 3 minutes, a running test facility was constructed. The EML-50 vehicle and track tests were carried out in 1975 and 1976, using a strip of land already acquired as an extension route for an existing railway. The system was dismantled in 1977 to allow the extension railway to be built and a new track was planned at a different location.

2.3.3.2 Japanese Vehicles

The first JAL vehicle HSST-01 was constructed in a light alloy semi-monocoque shell with a streamlined outer skin. Wind tunnel testing was carried out to determine the pitch instability since the centroid and centre of gravity were close together. Pitch and yaw damping were achieved by fitting a pair of tail fin stabilizers to the rear part of the body shell.

Initially the vehicle was controlled on board by one of the two passengers. When moved to Kawasaki a remote control system was installed, which operated the LIM at a predetermined slip to give near zero normal force[66]. The variable voltage variable frequency supply is fed to the vehicle through brushgear, and is derived from a 200 kVA alternator, driven by two 150 hp automotive engines.

HSST-02 has a similar semi-monocoque light alloy shell, but mainly differs in that all the vehicle magnets are mounted on a primary suspended flexible chassis. The passenger compartment is linked to the chassis through a

secondary suspension. The main advantages are that either the track tolerances can be relaxed, or the magnet power can be reduced. Follow up of track irregularities is also masked from the passenger ride.

Gap sensing is accomplished mainly by inductive transducers, although HSST-02 uses accelerometers for lateral control. The track steel work is standard JIS channel section, and the magnets have extended pole faces to minimize the excessive leakage flux. The levitation rails are fixed to regularly spaced sleepers bolted to longitudinal beams. For the first 1000 metres these beams are reinforced concrete, and the remainder of the track uses steel section. Screw jacks can realign the longitudinal beams as the track settles.

The single-sided LIMs for both vehicles were similar in construction and performance, and reacted against a composite secondary consisting of a 9mm iron plate faced with either 5, 3 or 2mm aluminium. The 5mm ran for the first 200 metres of track, the 3mm for the next 320 metres, and the 2mm for the remainder.

Both magnets have similar ampere turns, but differ in length and area[67]. The HSST-01 magnets are 0.6 metre long and weight 30kg, those of HSST-02 are 1 metre long and weight 47kg. HSST-01 relies totally for levitation power from an on board battery, whereas HSST-02 rectifies the picked up power to supply the magnets, in addition to back up batteries. Other vehicle details are given in Table III.

The Ministry of Transport sponsored research vehicle EML-50 weighed 1.8 tonne and was supported and guided by 8 separate U magnets with pole face windings reacting against L shaped rails[68]. The power supply for the single sided LIM was fed to the vehicle through brushgear, and LIM speed control was by pole changing. The track length was 165.5 metres, with a 160m 5 rail power collection system, two rails for the magnet power and three rails supplying the 420 volt 50Hz power to the motor. A top speed of 40 km/h was possible on the existing track. The aluminium

TABLE III - JAPANESE EMS VEHICLES WITH LINEAR MOTOR PROPULSION

		HSST0I	HSST01	HSST0I	HSST02	EML50
Vehicle						
Length	m		4.2		6.84	2.8
Width x Height	m		2.6 x 1.1		2 x 1.75	1.7 x 2.1
Weight	tonne		1		1.8 + .6	1.8
Maximum Speed	km/h	35		307.8*	100	40
Seating Capacity			2		1+(6-8)	
Guideway						
Location		Sugita		Ogishima Kawasaki		Tukimino Kanagawaken
Length	m	200		1600		165.5
Motor						
Type			SLIM		SLIM	SLIM
Thrust	kN		3.4		3	
Voltage	V		0-600		0-600	420
Frequency	Hz		0.350		0-120	50
Power	kVA		200		200	
No of Poles			14			
Pole Pitch	m		0.144			
Length	m		2.141			
Airgap	mm		13		12	15
Reaction Rail						
Material			Al+Fe		Al+Fe	Al+Fe
Thickness	mm		5,3,2 Al 9 Fe			

*Rocket assisted acceleration on 1300m track
219.3 km/h LIM only

reaction rail was backed by unlaminated iron plate. Further studies into sensitivity of ride to track irregularities at 120 km/h and 15mm gap were planned, but were absorbed into JAL work in 1978.

2.3.4 Other Systems

2.3.4.1 UK Development

In the UK two groups produced working experimental EMS vehicles propelled by LIM. Jayawant at the University of Sussex constructed a 1 tonne vehicle with funding from the Wolfson Foundation(69), and continued research with Science Research Council grants. The vehicle was designed to operate on 30 metres of track and carry up to four passengers.

British Railways Board Research and Development Division were invited by the Department of the Environment to undertake a program of exploratory research into magnetic suspension and guidance of vehicles, following the withdrawal of support for Tracked Hovercraft Ltd. In doing so they constructed a 110 metre track at Derby on which a 3.5 tonne vehicle carrying up to 12 passengers ran(70). Continuing this research, The Transport and Road Research Laboratory supported BR to produce a project definition study of magnetically suspended Minitram type vehicles(71), as part of a larger program on Automated Urban Transport. BR's conclusion was that a second generation design of magnetically suspended vehicle could be significantly cheaper than a wheeled system in both capital and operating costs, despite the low power factor-efficiency product of the LIM. TRRL's published view resulting from the total program was that there was at that time no case for preferring a magnetically suspended vehicle instead of an equivalent wheeled system.

More recently, the West Midlands County Council have been successful in persuading the Government to part fund an EMS Maglev link from Birmingham Airport to Birmingham International Station and the National Exhibition Centre, for full operation in 1984(72). The scheme is for a twin 600 metre elevated track with 6 metre long 2.25m wide vehicles carrying 49

passengers each, at speeds up to 47 km/h. A consortium called the People Mover Group made up of seven companies including GEC, Brush, Balfour Beatty and Metro Cammell will put up £557k, with £480k from British Rail and £750k from the Departments of Transport and Industry. West Midlands County Council is to put up £980k. The system should be ready in early 1983 to give 12 months preoperational experience. Brush are to be responsible for the LIM propulsion and its overall control, and GEC Rectifiers will produce the transistorized inverter. Initially three vehicles will be provided, and eventually a fourth vehicle will allow two coupled vehicles per track.

2.3.4.2 American Development

American activity in EMS Maglev using dc magnets has been relatively limited. Borcherts and Wilkie at Ford Motor Company investigated the dynamic characteristics of attractive Maglev in 1972, with experiments on a 305mm diameter wheel. These were followed by a larger wheel test rig in 1974, but a vehicle was not constructed. Similarly the METREK Division of the MITRE Corporation completed analytical work in 1973 with confirmation on a 2.2kg magnet secondary suspended test stand.

General Motors actually built a 1.8 tonne vehicle which used the Krauss-Maffei arrangement of 8 offset levitation mgnets to provide lateral guidance(73). The fibre glass shell was supported on fore and aft aluminium box frames which housed the magnets, electronics and two LIM's. The LIM's allowed 0.1gee acceleration or deceleration (equivalent to 1.76kN thrust) at an airgap of 7.5mm. The 480V three phase power was supplied through brushgear and converted to 650V dc for the magnet drivers and for the LIM's the voltage was varied in magnitude and phase sequence. The reaction rail was 4.8mm aluminium backed by 6.3mm unlaminated iron. The power electronics used high voltage transistor bridge PWM choppers and optical isolation between high and low power circuits. Although the track length was only 15 metres and top speed only 9km/h a reasonably sophisticated trajectory control system based on a Texas Instruments 5TI

Programmable Controller was used. This system checked out vehicle status before a run, and also controlled the position and velocity profiles. The vehicle is reported to have made over 2500 round trips and achieved good reliability, but as yet there have been no published plans to further the development within General Motors.

2.3.4.3 Russian Development

The Soviet Union is reported to have built and tested a magnetically levitated prototype passenger vehicle weighing 10 tonnes, in 1978[74]. The vehicle could carry 36 passengers and was 9 metres long, 2.7 metres wide and 2 metres high. The first installation was to be in Alma Ata, the capital of Kazakhstan in 1979. The track length was to be 14 kilometres crossing the city, with two stations. Eventually there was to be a 65km extension to the Kapchagai Reservoir, a suburban recreational area and resort. Various reports differ as to whether the vehicles would be levitated by EMS or permanent magnets, but linear motor propulsion was to be used. It is known that both EMS and EDS systems are being studied in Russia analytically[75], and that Research Institutes in Moscow, Leningrad and Kiev have had substantial teams of engineers organised to investigate Maglev schemes.

2.4 The Electrodynamic System of Levitation

2.4.1 General Development

The electrodynamic system of levitation was suggested by Americans working in the field of superconductivity applied to particle accelerators. Several variations of the basic scheme involving vehicle mounted superconducting magnets were proposed, the main difference being choice of track conductor. In the first years after 1970 research groups began basic investigative programmes in Japan, USA, Canada, Germany and the UK. Japanese development centred on their need to find a non polluting low noise and vibration alternative to the Shinkansen. The maintenance cost of keeping track alignment under the severe duty cycle was correctly

anticipated as being of major importance. From the beginning the Japanese had decided to run 16 car trains in the ultimate revenue system, and chose a loop levitation conductor over the sheet conductor adopted universally by other groups. Their reasons were that loop guideways can give better lift to drag ratios, and are simpler to realign and position than sheet guideways. The remaining groups designed revenue vehicles usually to run singly or in not more than three car trains, the overriding reason being that traffic passenger density on the routes to be used did not warrant multiple unit training.

Propulsion choice on the mature designs has been for the linear synchronous motor, with exception of the Ford baseline revenue vehicle. Ford opted for a ducted turbo fan, based on the Hamilton Standard Q-fan. With acoustic shielding the Q fan noise levels would be acceptable in low population density intercontinental travel, but would be totally unacceptable in the higher densities of the USA North East Corridor, Europe and Japan.

Guidance schemes generally relied on null flux operation of LSM magnets either on an additional array of null flux track loops, or null flux connected armature windings. The UK system differed, in that guidance forces were generated by shaded pole action of the vehicle magnets with the edge discontinuities of the levitation conductor.

The decade of the seventies has generally suffered in economic downturn, and this has naturally affected high speed guided ground transportation research. The American research was closed by an executive decision to halt all HSGGT work in 1975. German development of EDS was discontinued as a choice was made in favour of EMS Maglev. UK development has continually suffered from shortage of funds, and Canadian work has been at a low ebb in recent years. JNR in Japan seem to be the major group fully committed to establishing full size EDS at 500 km/h and are in the process of reconstructing their inverted T 7 kilometre track at Miyazaki in the form of a trough guideway, and will run a 3 car train. Russian research has

recently been apparent, although it has merely extended and repeated already published information. It is not known whether there has been any significant hardware development.

2.4.2 American Systems

2.4.2.1 Levitation Research

Powell first suggested the use of superconducting coils to provide levitation of a passenger carrying train, in 1963[76]. The rail system could be a laminated conductor, but initial preference was given to a superconducting rail pair, over which a superconducting coil straddled. Later, in 1966, in collaboration with Danby, he proposed a more practical system where the track component was an array of normally conducting aluminium coils[77]. Further work produced modification of the basic concept and two superconducting coil arrays were placed either side of the track coils within a re-entrant cryostat, the so called null flux system[78]. With this configuration, only a small percentage of the vehicle flux linked the track coils providing a stiff suspension with high lift-to-drag ratio. The track coils could also be suitably powered with variable voltage and frequency to form a linear synchronous motor (LSM), as shown in Figure 1[79].

In 1967 Williams and Gerstle at Sandia Laboratories became interested in propelling high speed rocket sleds which were magnetically suspended. Guderjahn and Wipf of Atomics International, assisted by Coffee and Chilton of Stanford produced a viable scheme based on conducting sheet suspensions. During this study the method of impedance modelling to be used by later researchers was tried as part of the design process[80]. Guderjahn and Wipf proposed the conducting sheet suspension as an alternative to Powell and Danby's loop track for high speed trains, and incorporated a composite upper section of the channel with a ferromagnetic member to carry the lift force of the vehicle and increase the lift to drag ratio[81].

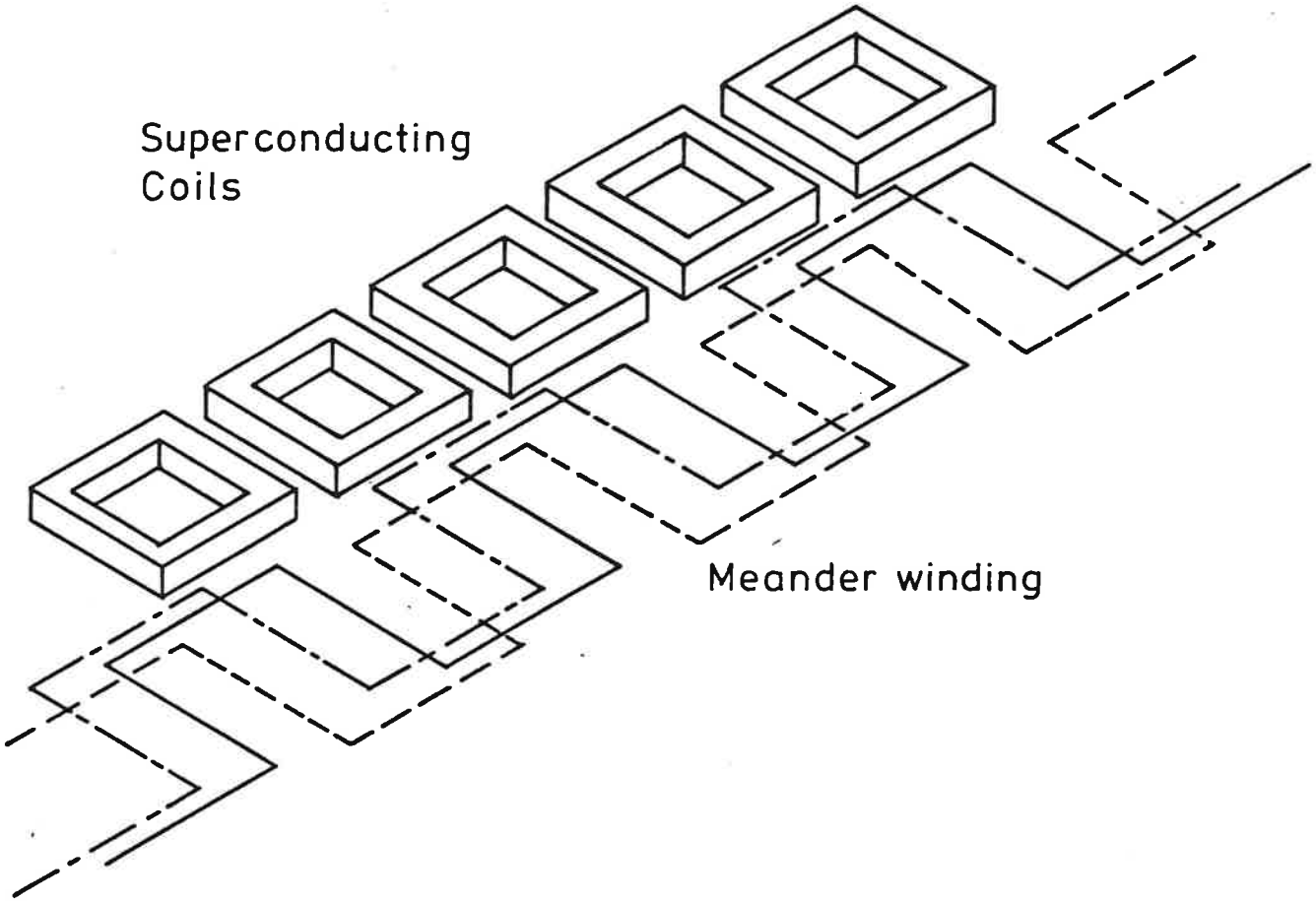

FIGURE 1. LINEAR SYNCHRONOUS MOTOR

Richards and Tinkham produced a systematic analysis of conducting sheet suspensions to incorporate normal and null flux systems, using Fourier analysis of the magnets' fields. An attempt was made to estimate the characteristics of linear synchronous machines, and the linear dc machine with track switching was briefly considered[82].

Both Stanford and Ford received support from US DOT for research into magnetic levitation, and Appendix I lists the reports to the DOT. Stanford concentrated on building a 152 metre guideway and a 300 kg wheeled vehicle which bore four superconducting magnets and a telemetry system at speeds up to 42 km/h[83,84]. Propulsion was by a glider towing winch and testing began in 1972. The dewar used to house the magnets used compressed fibreglass to transmit the loads to the outer walls but provide low heat leak paths. In the second half of the experiments, vertical side walls were tack welded to the horizontal track, and lateral instabilities were observed because of the discontinuity at the edge. Full seam welding produced stabilizing guidance forces. To analyse ride comfort criteria, damping coils were placed on the vehicle and it was taken through lateral and vertical step and ramp displacements and joints. A six degree of freedom programme was written to verify the dynamic behaviour of the vehicle.

Studies at Ford Motor Company began in 1970 on small scale wheel tests with ceramic magnets, and progressed to larger wheels with suspended and instrumented superconducting coils. By April 1974 the scale of tests had increased to 0.6 and 1.5m diameter wheels. Reitz and Davis of Ford produced many analyses of different magnet configurations, especially the method of calculating lift, drag and guidance forces of rectangular coils moving over flat or corner-channel guideways. Parametric studies of the magnetic forces for a revenue vehicle suggested that for an acceptable level of drag force the aluminium guideway should be about 25mm thick and the vehicle magnets should be at least 2 metres long. A proposed revenue

vehicle design initially chose coils 0.5 x 3 metres.

In evaluating propulsion units for their proposed revenue vehicle, Ford analysed the double sided LIM, a superconducting paddle wheel and helix, and a Q fan turbojet engine[85]. The LIM study was one of the first to use a three dimensional analysis of series connected constant current and parallel connected constant voltage fed primaries. Fourier transform methods were used in the same way as levitation analysis was carried out, and the results when compared to a two dimensional analysis, showed poor correlation. The combination of the LIM with the high clearance electrodynamic suspension had to provide active normal suspension of the motor from the vehicle without degrading the lateral ride quality.

The two superconducting motors used on board prime movers providing the motive power to rotate either "paddle wheels" or "helices" of superconducting windings. The paddle wheel configuration, Figure 2 consisted of meander wound wheels whose alternating magnetic field directly reacted on the sides of the aluminium guideway to produce an induction motor effect. Since only a small portion of the wheel would prominently link the guideway, an attempt to increase the linkage produced the helical arrangement, Figure 3, where the helix effectively moves as a screw. Both schemes would require major development and might only provide overall power to weight ratios comparable to LIM.

As part of the Tracked Magnetically Levitated Vehicle (TMLV) Technology Program of the US DOT Ford embarked on two major tasks in the second half of 1974[86]. The first task was to produce a conceptual design of a passenger carrying system which could meet specified ride quality objectives, with the major emphasis on levitation and guidance design aspects[87]. The second task was to design and test a high speed rocket propelled test vehicle which could provide the engineering data relevant to the conceptual design. Both projects were curtailed by the executive decision to abandon the majority of high speed ground transport

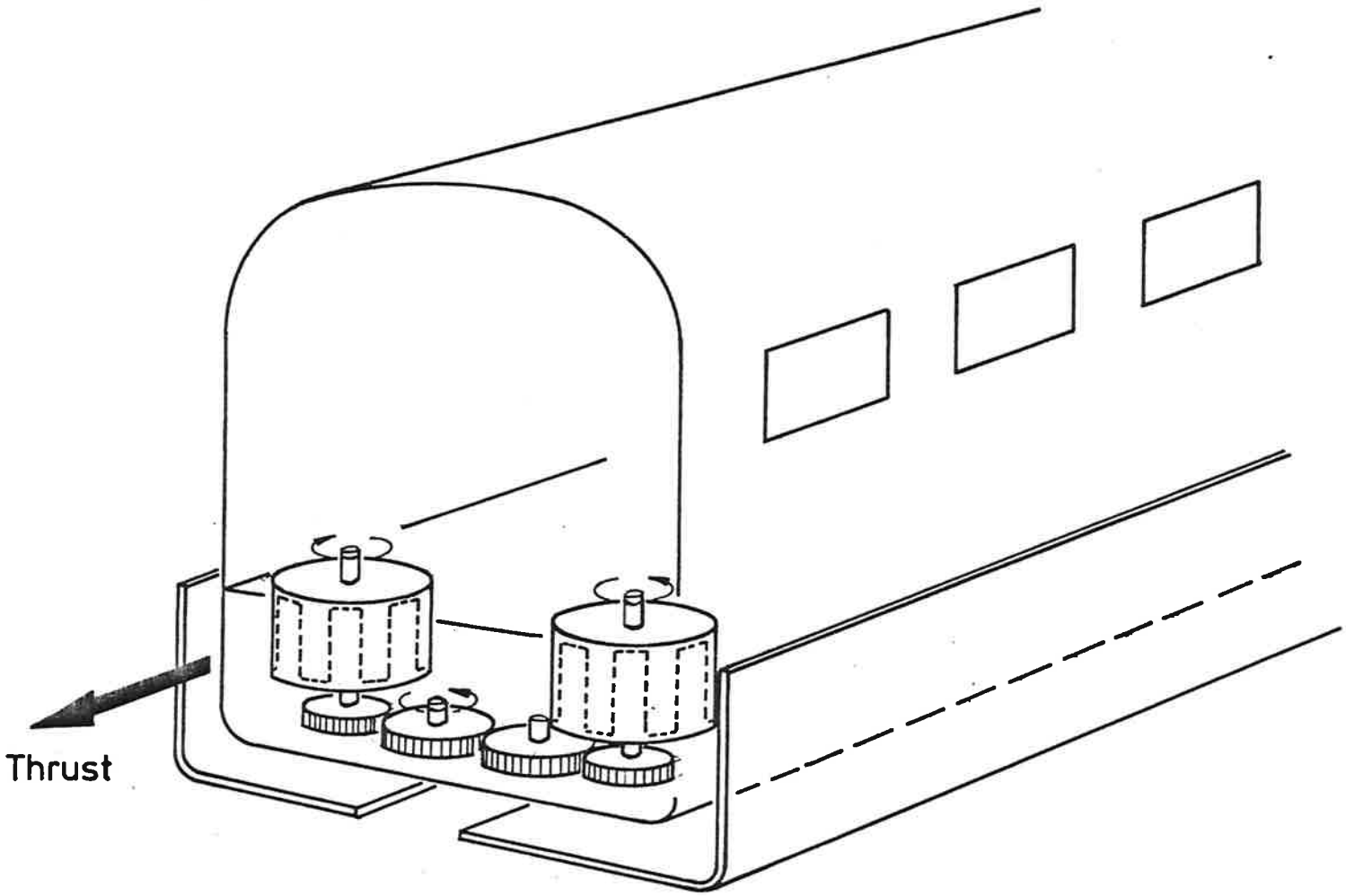

FIGURE 2. SUPERCONDUCTING PADDLEWHEEL

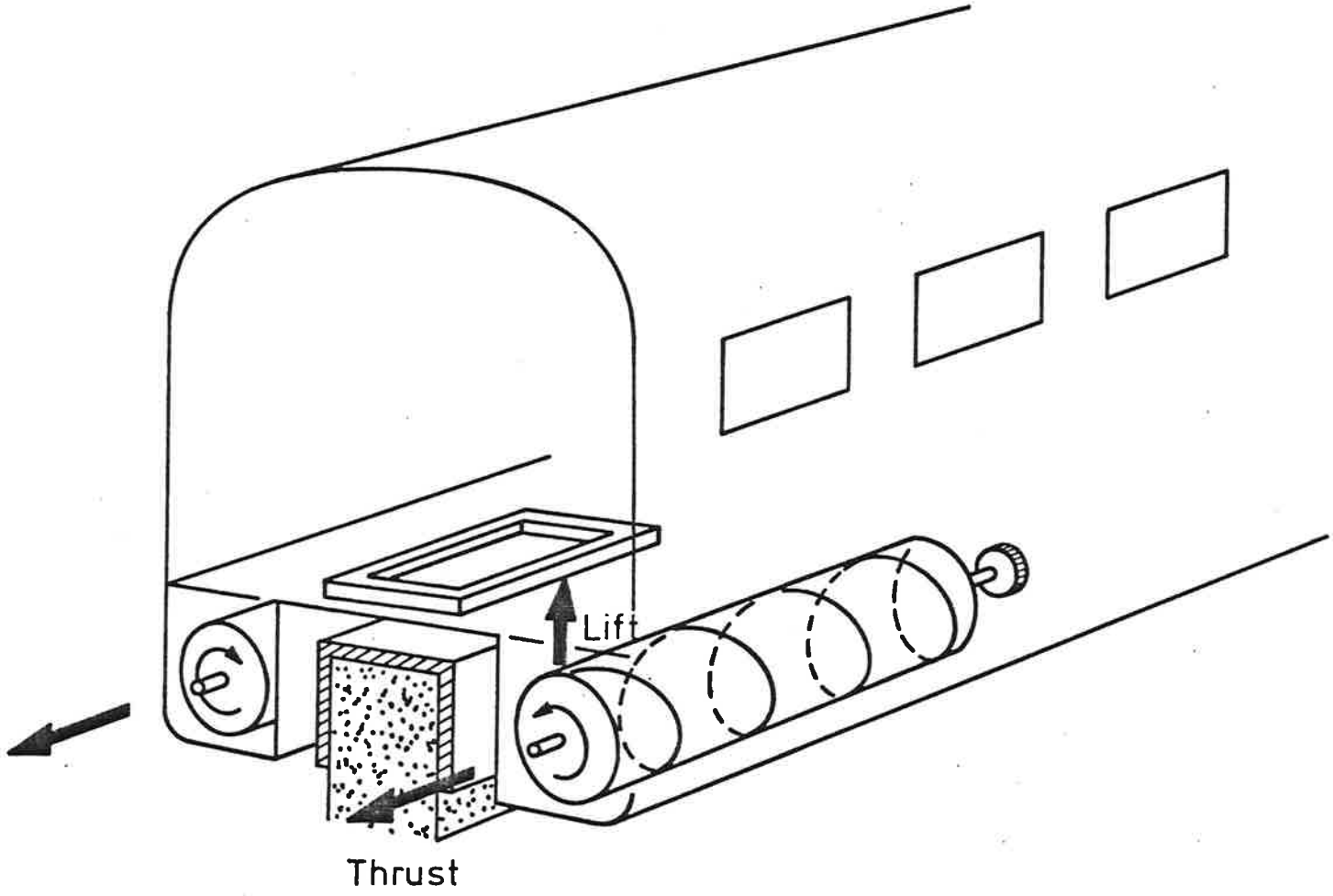

FIGURE.3 SUPERCONDUCTING HELIX

research on 3 January 1975. Ford continued and completed the conceptual design under internal funding.

The test vehicle was to weigh approximately 3 tonnes and would have been supported by four superconducting magnets at up to 480 km/h. The guideway would have been an inverted tee 1km long, located at the Naval Weapons Center, China Lake, California. Propulsion would have been solid fuel propellent rockets.

The conceptual study was largely performed by the Transportation Systems Department of the Aeronutronics Ford Corporation (Philco-Ford). The 80 seat vehicle was powered by two noise suppressed ducted fans, driven by regenerative gas turbines, and ran on an inverted tee guideway. The vehicle propulsion was also studied by the Raytheon Company who suggested a detailed design for a double sided LSM. Philco-Ford disagreed with the Raytheon recommendations and suggested the Q fan as being the most easily engineered solution, having much lower weight and complexity.

2.4.2.2 The Magneplane Project

The Magneplane Project evolved between June 1970 and July 1971 as a result of co-operation between Thornton and Kolm at MIT. Their patent(88) describes a vehicle that is magnetically guided, suspended and propelled, using a tandem array of superconducting coils along the curved lower arc of the cylindrical body. The coils interact with outer conducting strips to provide levitation forces, and the inward component of this radial levitation force provides the guidance. Propulsion was supplied by the interaction of the coils' alternating magnetic field with a track polyphase meander winding in the centre of the part-cylindrical trough, acting as a linear synchronous motor.

The project gained momentum when support from MIT was assisted by AVCO Systems, and the Raytheon Company, which enabled a systems approach to be taken embracing all aspects of vehicle design and evaluation(89).

AVCO performed initial vehicle dynamic design and defined the overall

characteristics of the magneplane vehicle. Raytheon were concerned with magnetic performance of the lift and guidance magnets and cycloconverter control of the LSM. MIT established design guidelines for the cryogenics and magnetic shielding required in the passenger compartment.

Further funding under the RANN program of the National Science Foundation allowed Thornton to begin detailed design study of both electrodynamic levitation systems(90) and linear synchronous motor performance(91). Together with United Engineers (a Raytheon subsidiary) and Raytheon, a full size Magneplane Vehicle was designed(92) and a 1/25 scale model constructed and tested with both permanent and superconducting magnet fuselages(93). The full scale design was for a 50 metre, 140 passenger vehicle approximately 3.8 metre wide by 4.35 metre high. The vehicle weighed 44.8 tonne and was levitated and propelled by sixteen elliptical pancake coils which curved along the bottom arc of the vehicle. Bucking coils above the main coils reduced the passenger compartment field to less than 0.01 Tesla. The coils were cooled by forced flow of supercritical helium through the rectangular cross section of the winding. Vehicle fuselage construction was based on aerospace technique of frames and stringers supporting a lightly stressed skin, as employed in the Boeing 707. In the description the Magneplane is likened to a low flying aircraft, which cruises at a height of about one foot and is free to bank in the guideway around curves taken at high speed. The guideway was a cylindrical trough of 4 metre diameter and 120° arc, the central 40° being taken up by the propulsion winding. Propulsion by LSM is through large self supporting meander busbars cranked to provide active length with integral end windings.

The 1/25 scale model was built at the Raytheon Equipment Division Laboratory site at Wayland, Massachusetts, and consisted of a 116 metre guideway supported on pipe legs. The purpose of the project was to

establish and study propulsion levitation and guidance as an integral system rather than as separate decoupled components, and to try out control strategies on the cycloconverter, such as active heave compensation. Two permanent magnet fuselages were built, one based on Alnico 8 and the second on samarium cobalt magnets. Chu and Tang at Raytheon backed up Harrold's magnet optimisation and design by computing the lift and guidance forces that would be obtained from in line and laterally displaced magnet aways, and these calculations were extended to include the revenue vehicle design[94]. The guideway was constructed from two parallel rolled aluminium levitation conductors whose diameter of roll was about 0.23 metre. A 40° arc at the centreline exposed the flat meander LSM armature winding which was formed into three phases at a pole pitch of 75mm out of 10 gauge aluminium wire. Details of the track and vehicle are given in Table IV. After an acceleration section of 55 metres the vehicle had reached 98 km/h. If a controlled speed profile run had been achieved from the cycloconverter, the vehicle dropped down on the last 18 metres of track where the levitation strips acted as eddy current brakes.

During the last stages of the project, before it was terminated in June 1975 when funding was discontinued, a study was made of the guideway edge effects. Tang's analysis suggested that significant edge generated guidance was possible, and that this could be enhanced by addition of a keel magnet within the main pancake magnet plan[94,5]. This effect was not successfully incorporated into a redesigned Magneplane revenue vehicle, and would have modified the roll stiffness achieved, constraining the free roll philosophy adopted by Kolm and Thornton.

TABLE IV EDS TEST TRACKS WITH LINEAR MOTOR PROPULSION

Vehicle	Magneplane	LSM 200	ML 100	ML100A	LEM Model	ML 500	LSM Model	EETO1	EETO2
Length x width x height, m	1 x 0.20	4x1.5x.6	7x2.5x1.93	5x2.2x1.4	2 x? x?	13.5x3.7x2.63	0.455x.305x.130	12x3.8x3.6	12.45x3.8x3.6
Weight, tonnes	14kg	2	3.5	3.6	0.75	10	8.1kg	17	14
Maximum speed, km/h	86.4	50	60		26	500	13	150	180
Guideway									
Location	Wayland	Tokyo	Tokyo		Tokyo	Miyazaki	Kingston	Erlangen	
Length, m	116	220	480		104 Loop	7000	25.2 circular	860 circular	
Magnet							PM		Melot
No coils	3	2	4	8*		16*	4	4	2
Coil size, l x w, m		1.2x.4	1.55x.3				56 x 75mm	1 x .3	1.20
Strength, kAT	60	320	250	450		450	-	515	1000
Levitation Height, mm	20	50-90	100	250		270	>1	100	100
Armature									
Type	LSM	LSM	LIM+	DSLSM	DSLSM	DSLSM	LSM	DSLIM	LSM
No Phases	3	1		3	3	3	3	3	3
Pole Pitch, m	75mm	1.4		1.8	0.24		60mm	0.33	1.4
Coil Size, lxw, m		1.3x.4				1.1x.7	60x80mm	w = .74	1.4x1.2
Section (or Feedable) length, m	(98)	(150)	(350)	(151)	4.32	29.4	3.6	2.874	430
No sections	8		64 primaries		25	240	7	9 poles	2
Thrust, kN			10			44		22/35	20
Air Gap, mm	20	-		190			>1	50	250
Power Converter									
Type	Cycloconverter	Cycloconverter	2 x VV	Cyclo-converter	Cyclo-converter	Cyclo-converter	Cycloconverter	Inverter	
Power Output kVA	30kW				10	9600	12	5000	
Current A						1100	60	1000	500
Voltage V					200	2900	30-120	0-3000	0-2700
Frequency Hz	0-200		50	0-46	0-15	0-33.1	0.5-40	0-105	0-20

+track primary *half for propulsion/guidance
half for suspension

2.4.3 Japanese Development

2.4.3.1 Initial Research[96-98]

EDS development in Japan has centered on Japanese National Railways, and has been actively supported by the major engineering firms Toshiba, Hitachi, Mitsubishi, Fuji and Sumitomo. Preliminary investigation into railway systems to succeed Shinkansen had begun in 1962, and had covered aircushion and permanent magnet suspensions as well as LIM propelled wheeled rolling stock. In January 1970, Kyotani, the then Deputy Director of the Technical Development Department of JNR, suggested a superconducting levitated linear motor propelled train for intercity passenger transport, which could surpass speed limitations of conventional wheel vehicle adhesion and would be free from noise, vibration and air pollution. A research and development program was set up to look at the constituent systems and to produce an overall specification for a practical arrangement. Several test installations and many cryostats and superconducting magnets were built in the ensuing period to establish basic levitation and damping characteristics over the Powell and Danby loop tracks.

After the first round of rotational tests had verified the basic principles of EDS and agreement with theoretical predictions had been reached, it was decided to construct two linear test tracks, to test levitation and propulsion under dynamic conditions. The first track, LSM-200 was designed as a LSM running test facility, and consisted of a 220 metre straight track with horizontal track coils interacting with two superconducting coils each 1.2 metre by 0.4 metre pitched at 1.4 metre on a magnet carriage housing the cryostat. Vertical track coils on each side of the channel guideway were connected to a cycloconverter to produce a LSM. The 2 tonne vehicle was wheel guided and could be run either as a levitated test, or with the track coils connected, as combined LSM and levitation. A LIM auxiliary drive device ran alongside the LSM 200 track, and the cryostat could be

driven separately through a draw bar to provide data on just levitation without the constraints of the magnet car and LSM interaction. Initial tests in March 1972 were followed by public demonstration on 27 July 1972. Levitation height over 110 metres of levitation loops was approximately 90mm at 50km/h. Facility details are given in Table IV.

The second linear track was built partly to publicise the centenary of the railway in Japan, and was named ML-100 (Magnetic levitation - centenary). The 480 metre track had normally conducting track coils over 240 metres, and 350 metres had track primary LIM propulsion. The LIM was split into 64 ground primaries pitched at 5.5 metre intervals, with three bands of synchronous speed, 25, 50 and 75 km/h. The secondary on the vehicle was a 12mm thick 6 metre sheet of aluminium alloy. Power was supplied to the LIM alternately from two 50Hz variable voltage sources. Trials of the system began in September 1972 and in October public demonstration was staged. The two cryostats each housed two superconducting coils, and helium was vented to atmosphere at the end of a run. About 10kN thrust was obtained and levitation height was 100mm over the track coil section. Reasonable behaviour of the vehicle gave impetus to the plan for a field test of a Maglev vehicle at 500km/h on a 7 kilometre track.

2.4.3.2 Combined System for Propulsion and Guidance

Continuing the development of the Powell and Danby's loop track configurations, in November 1973 JNR and Hitachi built a rotating test device to confirm calculations on the null flux system of guidance[99]. The wheel facility (Table V) could be used to test both null flux guidance and LSM performance, and consisted of a fixed cryostat with two coils energised to 250 kAT flanked by two discs which each had 18 LSM coils pitched at 0.468 metres, and 30 guidance coils. Running speed was 150 km/h and the cryostat could be given lateral and vertical offsets of ±100mm and 50mm respectively. The tests showed that the null flux system could achieve high lift to drag ratios and that adequate guidance forces could be generated.

TABLE V EDS ROTATING TEST FACILITIES

Wheel	JNR CSPG	CIGGT	ROSY
Diameter m	3.124	7.6	5.8
Tip Speed km/h	150	105	144
Location	Tokyo	Kingston	Erlangen
Magnet			
Manufacturer	Hitachi	CIGGT	Siemens
No coils	2	1	1
Coil Pitch m	0.7		
Size, lxw, m	0.6 x 0.3	0.4 x 1.35	0.3 x 1.0
Strength,kAT	250	202	460
Cryostat			
Manufacturer	Hitachi	Oxford Inst.	Siemens
Size, lxwxh, m	1.6 x .25 x 1.04	? x 2.68 x .32	1.4x .6x .24
Weight, tonne	0.6	1.0	0.54
Armature			
Type	DSLSM	LSM	LSM
No Phases	3	3	3
No Wavelengths	6	24	48
Pitch, m	0.468	0.505	0.38
Mean Width, m	0.3	1.27	0.9
Slot Pitch, mm		84	
No.Cond/Phase		2	4
No Cond/Slot		1	
Cross section mm^2		125, Al	70,Cu
Distance between coil faces, m	0.25		
Power Converter			
Type	Cycloconverter	Inverter	Inverter
Power Output, kVA	40kW	60	240
Current,A		350	400
Voltage,V			390
Frequency,Hz	0-30	0-30	0-52.5

Following on from these wheel tests, work at Toshiba had shown that a L shaped cryostat design housing one vertical and one horizontal superconducting coil was feasible[100], so it was possible to apply this technique to design with tandem coils supplying lift and guidance/propulsion forces within the same cryostat.

A 19.6 metre diameter test track was also constructed to test out cycloconverter control of a LSM when an eight carriage model train passed through switched blocks. The fields on the model cars were produced by permanent magnets. Position and speed sensing was monitored from a telemetered signal derived from the modulation of a light beam on the model. Because of the success with the model control system and the wheel results, it was felt that the concepts could be extended by a linear track facility. Figure 4 shows the combined system of propulsion and guidance (CSPG) that was tried out on a conversion of the ML100 track. When a lateral offset occurs, the armature coils have an additional circulating current i_c flowing which supplies the null flux force to restore centre line motion of the vehicle. Each coil set has a terminal voltage e_t made up of voltages e_l or e_r for left and right hand coils, generated by mutual linkage with the moving vehicle coils, and the $L\frac{di}{dt} + Ri$ drop, where i is the phase current i_p with any circulating current i_c adding or subtracting, depending on the offset direction. Only one phase is shown in the figure; to match conventional power equipment a three phase track winding would be used, with the null flux connection made between laterally opposite coils.

The ML100 track was therefore converted to provide in 1975 a LSM propelled vehicle (ML100A) using superconducting magnets[101]. The tests established that stable guidance was possible with the null flux connected armature coils, and experiments into passive heave damping control by aluminium sheets of various thickness were carried out. The guideway

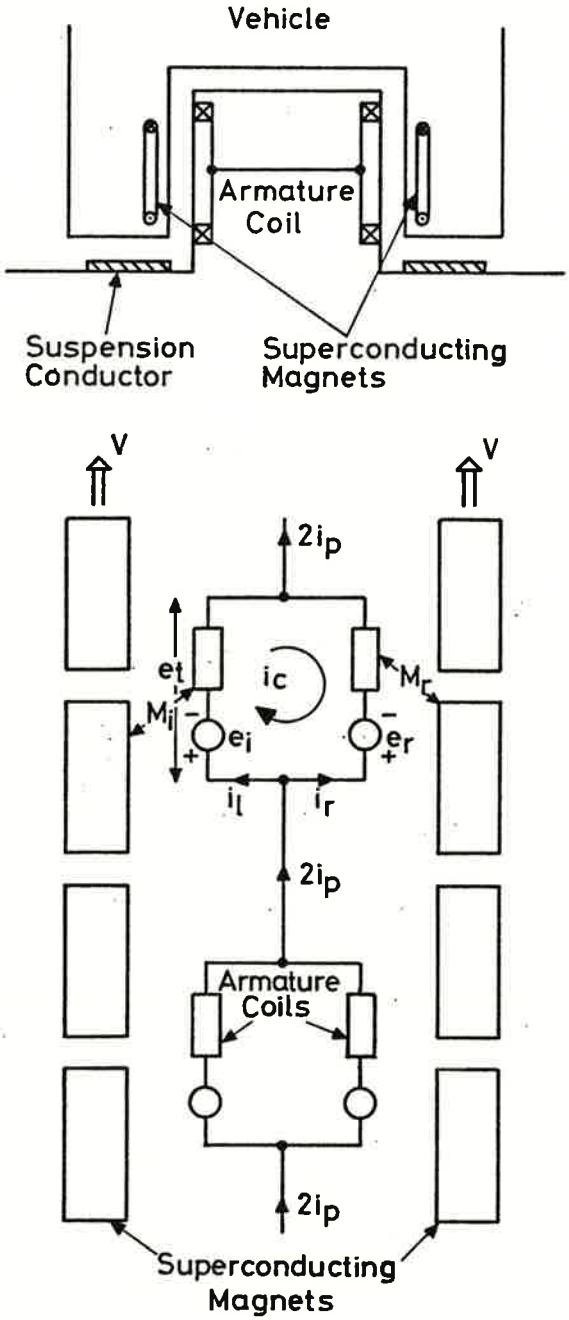

FIGURE 4. COMBINED SYSTEM OF PROPULSION AND GUIDANCE.

remained roughly the same length as for ML100, at 480 metres. Propulsion and guidance coils were installed over the 151 metres from the start of the track, levitation coils (remaining from ML100) ran from 64 to 200 metres, and the braking section ran for 65 metres from the 350 metre point. Only one way running was possible. The power supply consisted of two 860 kVA transformers feeding four 206kVA cycloconverters which ran at 375A from 0 to 4.6Hz. (Table IV). The cryostats used were L shaped and contained four superconducting coils, two for levitation and two for propulsion and guidance. The 3.6 tonne vehicle reached 60 km/h in about 100 metres and the distance between the coils and the guideway propulsion coils was about 190mm. Levitation characteristics were similar to ML100 with a levitation height of about 250mm. About 10kN thrust was generated by the propulsion, giving about 0.2gee acceleration. Guidance stiffness at 40 mm offset was more than 0.5 kN/mm.

2.4.3.3 The Miyazaki Test Line[102-4]

In 1974, JNR announced that a 7 kilometre test line facility was to be built in the Miyazaki Prefecture, Kyushu, between Hyuga and Tsuno, whose purpose was to test a near-actual sized vehicle running at the very high speed of 500 km/h. The Vehicle Testing Center was opened on 16 April 1976 to supervise the experiments and construction work, which had begun on 1 November 1975. By 26 July 1977 self propelled running tests commenced on the completed 1.3 kilometre section, and low speed tests to 100 km/h were performed from September 1977 to establish running characteristics and basic wheeled vehicle dynamics. The track structure was an all elevated guideway, about 6 metres wide, and constructed with the reinforced concrete and slab track techniques developed for the Sanyo Shinkansen. Track and vehicle details are given in Table IV. First stage tests were to be based on the inverted T configuration, and when performance was established, the centre section would be removed, and the U-track configuration would be explored. The inverted T structure was chosen as the most stable for the generation of lateral guidance forces, which when the facility was

designed, were still unqualified. Such a guideway would be unsuitable for a practical revenue system since it severely limits vehicle space. The tolerances on track construction were generally ±10mm for first setting and ±20mm for maintenance. Propulsion and levitation coil tolerances were to be kept to within ±6mm, measured relative to local guide datum rails. A Guideway Inspection Car could fully measure critical track dimensions at a running speed of 36 km/h.

Track grade was designed to minimise inertial forces on the test vehicle within the geographical constraints. At one end of the track near the Test Centre the down grade is 5/1000 and the guideway passes over the Nippo main line. Towards the other end a curvature of 10 kilometres is included. The acceleration rates of 0.3 to 0.4 gee are about 3 to 4 times that to be expected in a revenue vehicle, but permit 5 second running at 500 km/h, with the LSM thrust of 44 kN. This time is deemed sufficient to fully examine the vehicle dynamics, including damping characteristics.

The propulsion coils are wound using aluminium wire and are fixed either side of the inverted T and interconnected to make the null flux guidance operate. Their length is 1.1 metre by 0.7 metre wide, pitched at 1.4 metre. The coils have a moulded exterior with the location adjustment set in. A 50mm deviation from the straight ahead motion results in a guidance force of 50kN.

The vehicle carries no passengers and has an all up weight of 10 tonnes. Two L shaped cryostats on either side of the vehicle carry two levitation and two propulsion/guidance superconducting magnets each. The propulsion magnets run at 450 kAT, and the levitation coils are energised at 250 kAT to produce 270mm lift, with 120mm mechanical clearance. The vehicle width of 3.7 metres is roughly a revenue vehicle dimension, whereas the length of 13.5 is approximate half. Body construction was mainly out of aluminium alloys as used in aerospace manufacture. Coils are energised at the Test Center and switched into the persistent current mode by removing heating power from the thermal switches. The L cryostats employ return helium gas

and liquid nitrogen cooled shields, and can be operated as isochoric containers working up to 200 kN/m^2 pressure. Their capacity is about 400 litres of liquid helium, and heat leak is about 10W, with a roughly 10% lower heat leak when running. The lower heat leak observed as the vehicle moves is thought to be caused by more effective heat transfer in the vapour and liquid cooling of the intermediate temperature shields.

The general system of power supply and LSM control is shown in Figure 5. The ground coils are laid continuously along the track and are arranged in sections of length D, slightly longer than the train length d. The main power supply is a strong UHV buffered by a motor generator set at the main substation. The motor generator increases the utility frequency to provide a better harmonic content for the pair of subsequent cycloconverters. The utility sees a synchronous machine load. If the cycloconverters (or inverters) were not buffered, a low power factor load with high harmonic content would be presented to the utility with a resulting economic penalty. The sections are connected alternately to similar cycloconverters A or B, and the adjacent sections containing and expecting the vehicle are the only ones energised. The vehicle position is fed to the control centre from a 180 kHz signal transmitted on board into a transposed inductive track wire system.

The switching control is set up to allow the leap frog of cycloconverter connection through track side vacuum switches, which will only switch at zero current. This feeder switching must be accomplished in such a way that there is no fluctuation in propulsive force on the vehicle.

For the Miyazaki test track the ratio of train length to section length is about 0.45. Before the control system was finalised for ML500, a model linear motor and cycloconverter were tested by JNR on a 104 metre loop track. The vehicle length and section length of 2 and 4.32 metres were about 1/7 of the ML500 track, but had similar ratio. The 10 kVA cycloconverter was tested out using the actual control desk for the Miyazaki facility. Table IV includes brief details of this system. A choice was made for a section

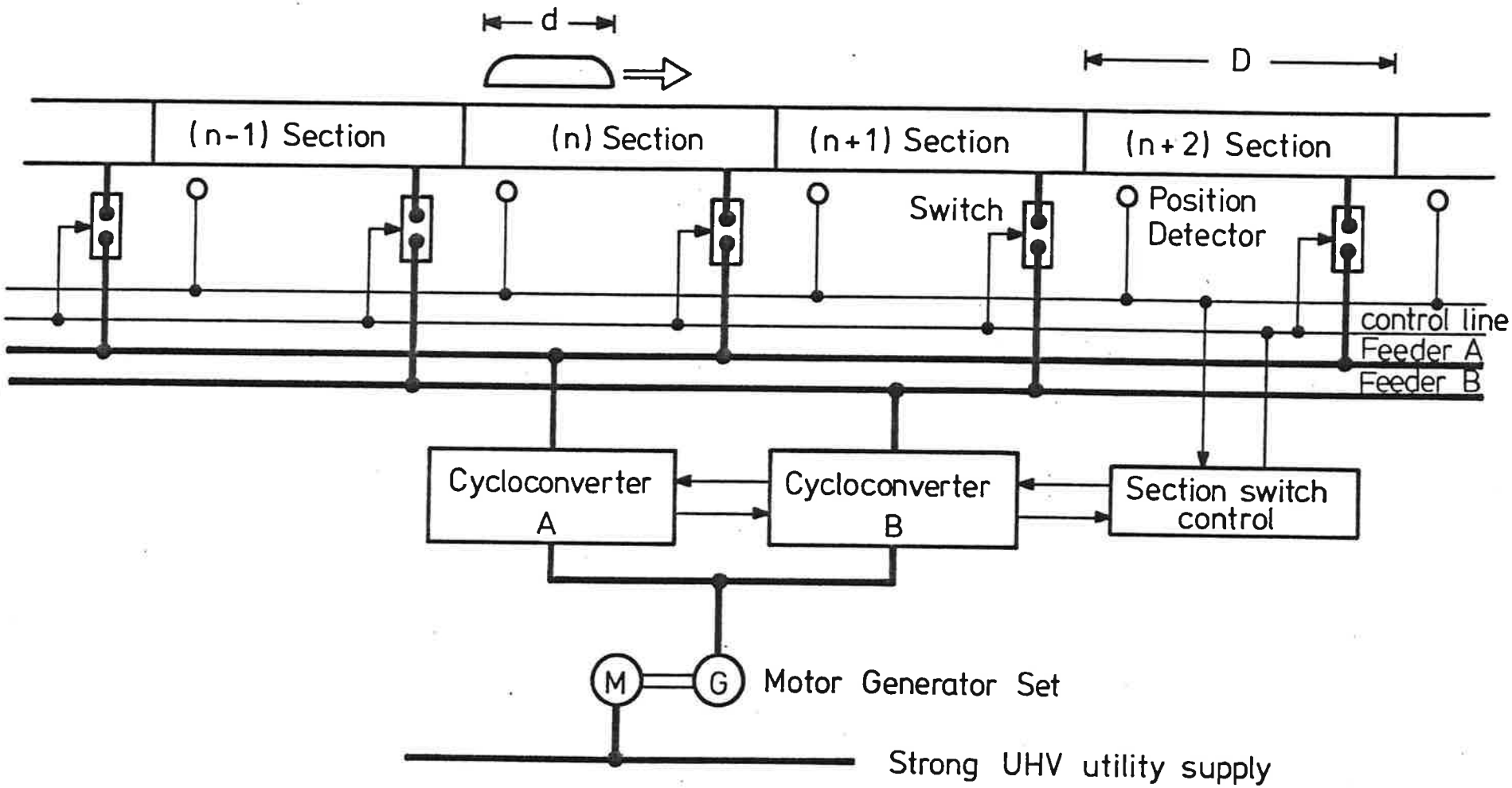

FIGURE 5. POWER SUPPLY AND CONTROL SYSTEM FOR LINEAR SYNCHRONOUS MOTOR.

length of 29.4 metres on the basis of sufficient switching time being available to the cycloconverter.

Phase angle and current control of the power converters was controlled by signals from optical reflection plates placed every 4.2 metres along the guideway. The position of the vehicle relative to a track propulsion coil is transmitted into a leaky feeder coaxial cable laid along the track.

After the preliminary low speed tests on the 1.3 kilometres length of the track had finished, and the extension to 3.1 kilometres was completed in November 1977, medium speed testing began, reaching 204 km/h in December. The levitated or guidance forces were checked independently, as support or guidance wheels were separately withdrawn. Eventually all auxilary support was withdrawn and ML500 was allowed levitated flight. The next guideway extension to 4.7km in June 1978 meant that 300 km/h runs were possible, and in November 347 km/h was attained. By this time about 5,000 kilometres had been covered and 2,200 running tests conducted. August 1979 saw completion of the track to the full 7 kilometres and on 21 December 1979 the top speed of 517 km/h was reached. While the last extension to the track was being finished, aerodynamic tests on ML500 as it passed through a simulated tunnel 350 metres long, at 330 km/h were performed. Also on the 4.7km track, tests were made on the performance of a helium refrigerator. The refrigerator was manufactured in 1978 to operate under dynamic conditions and was fitted to ML500R, the ML500 body with part of the framework converted. Although the Miyazaki magnets operated in closed conditions, JNR expect to consider using a refrigerator per cryostat, with the provision of sealed off operations in the case of a power failure or refrigerator problems. The prototype could deliver 30W at 4.5K, and weighed 163kg. Because the test vehicle had no on board power, an i.c. engine was mounted on ML100R for the tests to 200 Km/h. The prototype worked satisfactorily, and gave information on possible improvements.

The first stage tests were completed in December 1979 with the satisfactory

repeated performance of the vehicle at speeds of up to 500 km/h. The track is now being reconstructed to form a U profile, and three test vehicles will be built to study multiple car running. The CSPG will be used, with levitation coils on board. It has been suggested that with increased mmf propulsion coils, CSPG requires no levitation coils on board. Typically for a revenue vehicle, 16 800 kAT superconducting magnets are sufficient for levitation as well as propulsion and guidance. On board power pick up is accomplished by placing normally conducting coils in the levitation coils position, and picking up the track levitation loops' reaction field harmonics. Up to 100 kW of power could be generated over 300 km/h to back up on board battery power for services and refrigeration loads.

Further studies are taking place to establish the power stability of revenue vehicle operations. Typically in acceleration, up to 1.9 times active power and 2.5 times reactive power are required compared to the steady state 500 km/h cruise values. For a 16 car Shinkansen type train, the commercial line power requirement is in the region of more than 160MVA. In a design study for the Tokyo-Osaka line 300 MVA transformers feeding 250MW motor generator sets were distributed every 36 kilometres and fed four cycloconverters, two for the up line, two for the down line. At accelerating sections the M-G sets would be placed every 9 kilometres. The power swing as a vehicle passes through a section is caused by having to reset the leap frogging cycloconverter to zero and resynchronizing it in the advanced section. At the M-G base of 250MW the power input swing might be as much as 120MW. The Miyazaki track presented a more severe problem because of the short switching times. However by designing sufficiently high inertia constant for the MG set the input active power swing was kept to less than twice that of the output swing, and was confined to the lower speed range of 70-90 km/h, and was adequately damped out at the running speed.

Provided the U track conversion and running of the three vehicle train set is satisfactory, JNR will redesign for a preproduction test train and track (about 40 kilometres long) to be built in either the Nagano or Yamanashi prefecture. It is likely that since the Japanese Ministry of Transport has begun to take charge of both the JNR and JAL effort, the track will be part of a dual facility to test both EMS and EDS systems. Initial spend on construction work will begin at around Y 10,000m in the form of a government grant.

2.4.4 Canadian Research

2.4.4.1 Overall Development

In 1970 the Canadian Institute of Guided Ground Transportation (CIGGT) was established at Queen's University Kingston to carry out investigations and research, both short and long term, towards improving Canadian guided ground transportation systems, and to involve graduate and undergraduate students in transportation studies. In February 1971 the Canadian Ministry of Transport's Transportation Development Agency (TDA) let a contract, to be administered by CIGGT, to investigate the use of superconducting magnets for suspension, guidance and linear synchronous propulsion of high speed transport, and to establish in Canada,a group of applied scientists competent in this field of research. Initially the Canadian Maglev Group was formed by physicists and engineers from Queen's and Toronto Universities, and later McGill University supplied computational and analytical expertise. The Group have produced a large number of papers describing various aspects of their work; the major results are included in the CIGGT annual progress reports to TDA[105-9], and a report by Hayes of the National Research Council[110]. From the beginning of the development programme emphasis has been placed on producing a viable design for a revenue vehicle, that would be suitable for Canadian conditions. The funding from TDA (later to be reorganised as the Transport Canada Research and Development Centre) was for three phases of

development. The first phase was for two years from February 1971 to March 1973 and cost $59k. The work involved introductory studies into the design of levitation magnets, establishing LSM propulsion concepts, and producing a conceptual design for a Maglev test facility. The second phase development cost $320k with additional funding of $133k for Queen's University from the National Research Council to construct the test facility. Phase II lasted until March 1975 and allowed substantial progress to be made on several fronts. A 7.6 metre diameter test wheel which could attain 101 km/h was constructed and proved, and a 6 component force harness was designed and built to accommodate test cryostats and magnets. A preliminary revenue vehicle for a Toronto-Montreal via Ottawa route was subject to a reference design, on which technical and economic analysis could be based. The purpose was to further optimise the design of sub-components such as levitation magnets and their operating characteristics, LSM propulsion strategies, guidance requirements, guideway and vehicle construction.

The LSM received a high priority of effort. At Toronto the theoretical analysis was completed and optimization studies attempted to quantify trade offs in design. Current source inverters which had been under development for other applications were found to be applicable to LSM propulsion with little modification. An 8 metre model LSM was constructed at Queen's University and powered by a Toronto designed cycloconverter. The model vehicle had rare earth permanent magnets to simulate the field distribution of a superconducting magnet array on a revenue vehicle, and a six channel FM telemetry link provided control and data transmission.

In 1973 a LSM magnet coil was designed and wound. This magnet was near full size and was meant to prove the concepts of LSM propulsion using the large test wheel facility. The 1 tonne cryostat was delivered in May 1974, but suffered cold leak problems at a lower demountable seal which was eventually soldered up. The cryostat was fabricated by Oxford Instruments. Once this problem was overcome, the dewar and magnet operated satisfactorily and the

initial wheel tests with a rim mounted air cored armature winding proved successful, with no sign of magnet instabilities, despite severe mechanical vibration and voltage transients on loss of synchronism.

Finally levitation system analyses were performed to include parametric and economic investigations of sheet guideways, using integral equation, Fourier transform and dynamic circuit theory. Ladder guideway models were included in the study. A levitation magnet and cryostat were designed for testing on the wheel, and materials were procured, although the magnet was in fact never constructed.

Phase III began in April 1975 and was for a further two year period. The objectives were to continue with the practical tests on the wheel facility to verify design parameters, to develop suitable mathematical models that could describe levitation, guidance and stability as well as propulsion and dynamic performance of a vehicle over its entire speed range, and to identify a feasible Maglev system. A full description of the magnets and guideway components including the LSM control concepts was required.

The experimental work on the test wheel which began in Phase II was continued and the six component force harness was commissioned and allowed accurate measurement of LSM forces and moments to be made. A 42 kVA three phase variable frequency current source inverter from the University of Toronto supplied power to the LSM windings. The model LSM test track was provided with an improved FM telemetry system and a method of measuring force angle in the machine was tried out. Cycloconverter modifications allowed external analogue signal drive to select output waveforms as well as voltage and frequency. Two types of control strategy were developed, using either back emf sensing or vehicle position feedback, and were computer modelled under dynamic conditions. Both systems were tested on the small tracked vehicle. Further work on the levitation and guidance forces was pursued by the McGill group, who found the dynamic circuit theory proposed by Ooi to be the most satisfactory. Lift, drag and guidance forces were examined for finite width

strips and rectangular magnets and the results correlated well with experimental findings. Passive coil damping with normally conducting coils closely linked to the main windngs electromagnetically, and attached physically to the secondary mass in parallel to the secondary suspension were examined. Configurations to damp all six degrees of freedom were proposed with coil masses in the order of 100 kilogrammes. To achieve low frequency damping (less than 0.5Hz) and to allow steady state deflection offset controlled hydraulic actuators would be included in the secondary suspension.

Toronto also investigate ladder and loop guideway configurations as comparisons to the sheet guideway reference design. Although the Japanese experience of low drag forces with low force pulsation were confirmed, with similar amounts of conductor material to a sheet track, the rapid build up in destabilising force for offset magnets was considered to be a problem with the Canadian flat track arrangement. For high speed turnout the levitation conductor would be loops with semiconductor switches to allow open or closed operation as the guidance direction is determined by null flux loops also containing semiconductor switches.

The test wheel facility was altered to allow levitation experiments to be performed. The LSM windings were removed, and the plywood rim was machined to take a 800mm wide x 10mm thick aluminium strip. The LSM magnet was used to determine the levitation drag and guidance forces, as well as the effects of joints in the conductor.

In the final year of Phase III the conceptual study and details of the proposed revenue Maglev vehicle and operating system were completed. Hayes at NRC integrated the work of groups within CIGGT and NRC in the engineering design study. The vehicle was based on the CIGGT reference designs which had matured through the previous six years of research. The flat track configuration, initially chosen because of the problem that might arise with snow accumulation in Canada was to be elevated to a mean height of 7 metres

in the urban and intercity route. Levitation, guidance and propulsion track conductors would be embedded in asphalt on the top surface of a prestressed box section carrying a reinforced concrete slab deck. The 30 tonne vehicle design is for 100 passengers at a cruise speed of 480 km/h between Toronto and Montreal, a 600 kilometre trip with an intermediate stop at Ottawa. Isochoric cryostats separately house ten levitation magnets, and the 56 LSM magnets are grouped in seven independent pods. Each eight pole pitches, space is required for end of pod cryostat insulation. Merely omitting a magnet would result in large interpod forces, so a mini magnet of half width is included at the end of each pod with reduced ampere turns (150 kAT, main magnets 500 kAT). The pod has a helium reservoir with 85 litre storage mounted above, within the pod support linkages. Pods are connected to the passenger compartment and are allowed to move laterally through a torsion bar secondary suspension and dampers, whereas levitation cryostats are constrained by their secondary suspension and dampers to move purely in the vertical direction. Main vehicle guidance would be derived from the interaction of the LSM magnets with track null flux loops laid in between the levitation strips. High overall apparent efficiency of 70% is determined by economic trade offs in guideway conductor and vehicle magnet design. For a 60% capacity vehicle the LSM produces nominal 40 kN thrust with track conductor current of only 240A in the split phase three phase winding. Terminal rating at a section length of 5 kilometres is 7.56 MVA at 117 Hz. Following on from the completion of the conceptual vehicle design study, the economics of the system operating in the Toronto-Ottawa-Montreal corridor were investigated at CIGGT[111-2]. The purpose was to establish whether the capital outlay for the system could be ultimately offset by the revenue generated by passengers and freight over the short haul route. As with studies by other Maglev groups the emphasis had changed from high speed intercity commuter orientated transport to high capacity transport with competitive specific energy density and dependence on renewable or at least

centrally generated energy supplies. Economic parity with conventional high speed rail systems running at elevated speeds of 300 km/h seemed to be especially attractive.

NRC has continued to refine the conceptual design for the revenue vehicle and magnet systems, and has also devoted effort to investigating alternative vehicle configurations, with emphasis on ride quality. The test wheel at Queen's has been converted to allow low speed tests on a SLIM under an US DOT contract with Mitre and Rohr. This programme is described in section 2.5.1.4.

2.4.4.2 Test Facilities

The two test facilities are both run by the CIGGT at Queen's University. The small scale model LSM facility consists of an eight metre diameter circular track, a rare earth magnet assembly mounted on a wheeled vehicle, which also carries sensors and a FM telemetry transmitter, and a 12 kVA cycloconverter. The second facility is based on a 7.6 metre diameter rotating wheel onto which guideway components can be fixed. A force measuring harness can accommodate a cryostat housing a superconducting magnet for propulsion and levitation tests at speeds up to 105 km/h, limited by centripetal accelerations of 21 gee. The test inverter comprised two basic forms of inverter, a three phase current source, and a three single phase current source, with each of the phases 120° electrically displaced. Both systems could deliver 350A rms with a frequency of up to 30 Hz.

The small scale model LSM facility was constructed to evaluate the operating requirements and control system strategies for full sized vehicles. Preliminary work had examined iron cored LSM as being suitable for model work, but when the facility was designed it became apparent that an air cored armature showed more promise in available current density with minimal temperature rise, than a iron cored track. The full size system could also be more readily modelled using rare earth magnets for the field array. The vehicle was a light weight structure with machined model railway type wheels

running on the circular track aluminium rails placed either side of the armature windings. The four pole magnet array was made up of alternating polarity blocks of rare earth magnets 75mm wide pitched at 60mm. Each block was made of 4 wide by 3 long magnets which could be aligned to produce essentially a sinusoidal flux density profile longitudinally under the vehicle, and a square profile transversely, as would occur in a full sized LSM. Also on board the vehicle was a permanent magnet machine, which could be either driven by the LSM through gearing to the axle and allowed to dissipate power into a fixed resistor giving a load on the vehicle or left open circuit to act as a tachogenerator.

Two telemetry systems were tried on the model. The second system allowed force measurement, force angle and velocity signals to be transmitted to the control of the cycloconverter to allow more versatile operation of the LSM to be realized. The force angle was measured by a Hall effect probe which sensed the displacement of the vehicle magnetic field from the armature mmf wave. The probe measures the track field at ten equidistant positions over a wave length, and converts to a sinusoid equivalent which is zero crossing detected. A bistable circuit is latched at the beginning of a scan of the probes and unlatched when the zero crossing point is reached, thereby giving a position dependent output. Vehicle velocity and velocity error signals are derived from track posts being detected by vehicle phototransistors. The generated normal and longitudinal forces will be measured by strain gauges on a magnet harness to which the magnet assembly is fixed.

The cycloconverter is nominally rated at 12 kVA and gives an output of 60A three phase, 0.5-40 Hz. A special purpose three phase oscillator was built to produce a wide range output waveforms with the intention of improving the vehicle performance by applying a wider range of feedback control schemes than would be possible with just a sinusoidal oscillator.

Computer modelling of LSM control had indicated that velocity feedback to control the cycloconverter voltage magnitude was necessary to damp out the

force angle pulsations. With the telemetry system and improved cycloconverter oscillator, the control strategy was successfully demonstrated, as were automatic acceleration and deceleration and transient behaviour control following a system disturbance. The combination of both velocity and force angle feedback produced most acceptable vehicle performance; controlling vehicle velocity during steady state and transient operation essentially controls ride quality (at least in surge) and controlling the force angle near 90° maximizes the thrust force and minimizes normal force generation. Both parameters can be measured on or off the vehicle.

The large test wheel is mounted with its axis vertical and is made up of eight aluminium I beam spokes to which rim segments are bolted. The rim is built up of eight laminated plywood box sections with a tension wound outer wrap of epoxy impregnated glass fibre cloth, to take the hoop stress under the maximum speed of 105 km/h (70 rpm). A 120 kW dc motor is mounted through a gearbox to the drive shaft and can either motor the wheel at full speed or act as a drag force generator when connected to load resistance. The wheel rim was extended in width to take essentially full sized LSM windings made up from 10mm stranded aluminium on a 0.52m pitch. The three phase winding was splitphased, providing one conductor every 30 electrical degrees and two sections were provided to allow section entry testing. Eight slip rings take inverter power to the windings and are rated at 400A. The track rim can take a distributed load of 1 tonne at a width up to 1.45 metre. The support frame was strain gauged to allow for wheel balancing and to generally monitor structural vibrations. During the initial commissioning the structural resonance was traced to unbalance of the high speed drive shaft, and additional problems were apparent in the wheel hunting at speeds above 30 rpm. A control loop was designed for the drive motor to sense the rate of change of armature current, and by limiting the acceleration of the wheel to 20 revs/min^2 the wheel could be operated successfully to full speed.

The LSM Magnet was designed to be virtually full sized at 0.4 x 1.35 metres. The shape is a racetrack with an internal corner radius of 179mm. A high current density superconductor previously used for MHD coils was used because a lightweight design was required to enable the force measurement to be made sufficiently sensitive. The short sample critical current was 1900A at 5.5 Tesla which corresponded to $5.2.10^5$ AT on the 252 turn LSM magnet. Initially designed for 60% short sample current of 1200 A, the coil was finally run at 800A (40% s.s. and 202 kAT total) which experimentally appeared to be near its limit of stability. The magnet was quench tolerant and ran with as little as 10% of its winding in LHe and has performed well despite rapidly applied forces and large voltage transients applied through the power supply.

Inverter design was based on the premise that the full sized LSM for a revenue vehicle was rated at 8.5MVA, 123Hz with a line voltage of 5.8kV and 490A. Reducing these values down to one magnet and a fifth of the speed, the inverter phase voltage is 40 volts and the maximum frequency 28 Hz with an inverter rating of 42kVA. As mentioned, the test inverter was made up of two configurations, and was supplied with a 100 kVA input service. The three phase inverter produced a square current waveform at 120 degrees and the three single phase systems can produce either 180 degree square current, 120 degree square current or a 15 step sine current approximation waveform. The band of frequencies possible are 2-30 Hz at 350A. Both inverters use water cooled thyristor stacks and were designed and built by the University of Toronto.

The test wheel was completed and low speed runs performed in late 1974. In March 1975 the first set of LSM propulsion tests began. The machine parameters such as phase resistance and inductance, mutual inductance between phases, and field to track mutual were measured through the slip rings. The wheel windage was calculated by decoupling the drive motor and measuring power input before and after driving the wheel. Using a simple force

measurement system the magnet was run as a LSM with the drive motor disconnected, and the inverter supplying approximately 200A. By ramping up the inverter frequency slowly as a function of time, the basic operation of the LSM could be confirmed. The current angle followed a predicted pattern until its value reached 90 degrees, when synchronism was lost. Control of the power factor angle was also established in the preliminary tests, and propulsion force roughly followed the predicted relationship.

With the completion of the more sensitive six degree of freedom force harness, more detailed examination of LSM behaviour could be made. The dewar total installed magnet helium capacity is about 80 litres which allowed run times in excess of 12 hours. Typically about 70 litres were required at 16-20 litres/hour to cool down the cryostat. A further 150 litres were needed to $\frac{3}{4}$ fill although these quantities could be less. The 450 litre delivery would last three days of tests with 10-12 hour operational runs per day.

Two motor control strategies were examined on the test wheel, the α and β. α control is where the internal voltage of the machine is measured and its angle with the current phasor is deduced. This is achieved by using a model of the stator resistance and subtracting the resistive drop from the terminal voltage in an analogue circuit. The resultant waveform models the internal voltage of the machine and the controller is required to force the stator current to a specific value in a set phase relationship to the internal voltage. For known ratios of stator and field currents this angle is an explicit function of the force angle. For much higher speeds the armature resistive drop is small compared to the internal voltage, and can be effectively ignored. The generated angle is now the power factor angle, θ, and the control strategy is known as θ control.

β control is LSM control based on position detection. On the test wheel optical sensors are fixed to the outer support structure and a series of stud markers are fitted to the wheel rim at a pitch of one wavelength. The

optical sensors are 60° pitched, coinciding with the stator winding pitch, and their triggered signals correspond directly to the armature displacement with respect to the fixed reference frame of the magnet. The signals can be used to control gating of the inverter throughout four quadrants of operation. Although this type of control is essentially advocated by JNR, CIGGT consider it only suitable for near station operation, to enable acceleration and deceleration rates to be closely controlled. α control is impractical at low speeds because the model has only a very small induced emf to make up the internal voltage.

Straightforward open loop control where the force angle adjusts itself (within stability limits) to match the motor thrust to the load drag was examined, but because the machine is so lighty damped, surge oscillation becomes marked and synchronism is soon lost. Programmed frequency ramping without position (β) or internal voltage (α) control might be possible with a sample voltage from the inverter providing a damping mechanism, but wheel tests were abandoned in favour of a laboratory test rig examination.

Two main sequences of test runs in August and December 1975 confirmed basic calculated predictions of LSM performance. Open circuit and short circuit tests at nominal air gaps of 220mm and 202 kAT were compared to predictions using mutual inductance programmes. Steady state load tests under β control over four quadrants generated test data on propulsion and levitation forces. Pitch roll and yaw moments were small and were equivalent to a 40mm offset of the magnet's geometric centre from that of the centre of force measured from the balance.

Harmonic content of the normal and thrust forces was observed to give a dominant sixth harmonic, when energised from the 120° square waveform currents, but agreed well with predictions. Higher harmonics were also observed in the measured force waveforms. Inverter control of sequential sections was established by leaving one half of the wheel winding unenergised. Resynchronisation and stable operation was achieved although the normal and thrust forces continued to ring for several cycles after

resynchronisation. Both α and β control were tested and validated, although α control required further stabilisation at high stator current magnitudes since the relationship of the internal power factor angle and the force angle are no longer unique.

Generally the CIGGT test wheel experiments confirmed the theoretical predictions of steady state performance of LSM at low speeds and modest frequencies and power levels. The next stage of wheel tests began with use of the LSM magnet to confirm predictions on levitation behaviour. The outer rim LSM windings were removed and an aluminium strip 0.8 metres wide by 10mm thick was fixed on. Lift and drag forces and their movements were measured, together with their variations over several different track joints.

2.4.5 German Development

German development has been financed by the Federal Government and EDS has been the responsibility of three companies, AEG-Telefunken, Brown Boveri and Siemens. The companies formed Projektgruppe Magnetschwebebahn in 1970 to investigate variations of tracks, test vehicles and revenue vehicle designs, together with development of hardware to demonstrate EDS with LSM propulsion. Other companies such as Linde provided expertise in developing forced LHe cooling systems for magnets and closed cycle on board refrigerator designs. As with the EMS development, results and analyses were presented at the annual BMFT Statusseminars (See Appendix I), and envolved extensive designs of possible revenue vehicles.

In 1972 it was decided to build a track and test vehicle to acquire basic knowledge into the operation of an EDS system using state of the art cryogenics. The Erlangen Test Carrier (EET-01) represented a full sized test system for levitation magnets working on the normal flux principle. The 17 tonne vehicle ran on an inclined circular test track of 280 metre diameter, at the Siemens Research Laboratories, Erlangen[113]. Maximum speed of 150 km/h was reached several times with the vehicle levitated at 100mm clearance by four of the superconducting magnets built. An overall distance

of 1000 kilometres was travelled with energised magnets. The vehicle was first put into operation in 1973, with the chosen propulsion of a double sided LIM with electrohydraulic gap control. The LIM could produce 35kN thrust at low speed and 22kN at the rated speed under an inverter limitation of 5MVA and power limit of 1.2MW for the motor. The drive package was supplied by AEG (LIM) and BBC (inverter) and represented the largest variable voltage and frequency LIM installation in Europe. The motor (AEG No LAZD 3340/9) had a synchronous speed of 248 km/h and the triple layer winding was force air cooled.

Tests performed on the magnets included pre-installation attitude checks. Because the vehicle ran at a 45° inclination and because of the inertial forces on the coolant, forced LHe flow was chosen so that the four constructed levitation magnets and the proposed guidance magnets could adopt similar standard construction that was orientation independent. The levitation magnets were mounted into two subframes within the EET structure, and guidance was performed by the LIM servo controller and auxiliary guide wheels. Levitation characteristics had been calculated by Urankar[114] and were confirmed by running tests. Vehicle and track details are given in Table IV.

From design studies for revenue vehicles it became apparent that a LIM propulsion was unsuitable, and that a LSM with active track would provide a better solution. The tests on the EET-01 were not extended to include guidance, so that a LSM programme could be followed. Continued levitation tests included a study of active damping on a EET magnet platform reacting against a watercooled copper mirror coil and on the EET itself at speeds up to 140 km/h, with real disturbances such as ramps and gaps. It appeared that an active control coil with about 3% of the main coil ampere turns could adequately damp motion with about 0.4 kVA/tonne required control power reducing maximum acceleration peaks to 0.1 m/s^2 from 2 m/s^2 at a resonance of 2 Hz. Passive damping could reduce this level to 0.7 m/s^2, but was

only effective to speed ranges below 90 km/h. This contrasts with the CIGGT calculated results that suggest passive damping is adequate for all speeds, even though their vehicle is lighter.

To test out the concepts of ACLSM, Siemens constructed a rotating test rig for air cored linear synchronous motors, ROSY, that had a 5.8 metre diameter and surface speed of 144 km/h[115]. The main wheel constructional material was propeller plywood, with the stator winding banded on with an epoxy impregnated fibreglass cloth, to take the high centripetal loads. Two separate Brown Boveri inverters each supplied 120 kVA to the split section tack winding, which enable section transition and inverter handover to be examined. Both inverters had a dc link voltage of 510 volts and pwm output with sub harmonic control from 0-52.5 Hz. An EET magnet fixed to a six degree of freedom frame allowed force and moment measurements to be made as the machine ran. Forced LHe cooling became particularly important in the configuration chosen of a vertical axis wheel, since the magnet plane was also vertical. The control concept chosen was based on a Siemens proprietry unit known as TRANSVEKTOR, which identified the phase current into its d and q axis components[116]. No communication equipment is required between the vehicle and the inverter control as vehicle position is calculated from the terminal phase voltages and currents. AS with the CIGGT α and θ control, vehicle speed is given by the induced emf frequency, relative vehicle position is given by the phase of the emf, and the levitation height is determined by dividing the magnitude of the emf by the power supply frequency. In deriving a model of the LSM, an oscillator is phase locked to the emf frequency and the required reference signals can be obtained to feed the control system. Leonhard and Boning devised an alternative control scheme which used a microcomputer to derive force angle, thrust and velocity from the instantaneous values of voltages and currents at the inverter terminals[117]. The system was tried out on ROSY and gave results in thrust measurement accurate to 5% over the frequency range 53 to 2.5Hz.

Various other methods of vehicle position detection were tried on ROSY, including inductive sensing and an open loop ramp generator using a dynamic model of the vehicle (wheel). These were generally successful as was the correlation of experimental and theoretical predictions of force measurements and operation under pwm inverter control. Transition between sections occurred within about 100ms (compared to about 0.5s for a full sized vehicle) and there was no measurable disturbance in lift or thrust force.

At the end of 1977, the levitation work was completed and the LIM drive was removed from the circular track. During 1978 a LSM winding was installed in the centre section of the guideway[118]. The track winding was three phase consisting of single cables embedded in concrete winding supports with a plastic based mortar. There were 6 conductors per phase on a pole pitch of 1.4 metres, which lead to a 200 km/h synchronous speed at 20Hz. The track winding was split into two 440 metre sections, one with a copper and one with an aluminium conductor of 84 strands making 240mm^2 section. The 5MVA LIM inverter was used to power the sections, since it could be split into two similar parts, each with an output of 2.7kV and 500A. The effective track linear current density of 10.6 kA/m led to a thrust of 20kN for an airgap of 250mm and with the two pole magnet assembly, this was sufficient to get EET-02 to 180km/h. The EET-01 test vehicle was converted to take a 3.4 tonne open bath cryostat assembly, MELOT, which contained two 1.2 metre diameter oppositely polarised circular magnets. The superconducting magnets were energised to 1 MAT each, and pitched at 1.43 metres. The helium bath allowed operation at up to about 6 hours without refilling. MELOT was tested on a stationary mock up of the track winding before being installed in the converted EET chassis to form EET-02.

The initial open and short circuit tests were performed using a 150kW dc drive auxiliary on the vehicle in February 1979, at 150 km/h. This motor

could be used for later loading experiments. The control scheme used for EET-02 was essentially the same as that tested on ROSY, but with modifications to allow for the different parameters of various circuit configurations. There is no need for example to include additional phase inductance in the inverter feed line to more accuately simulate a full sized track winding. Control circuitry is included to eliminate dc offset and unbalance in the phase currents, which occurs even though the winding is fully transposed to match impedances.

Projektgruppe Magnetschwebebahn produced a more sophisticated LSM design for the Emsland vehicle, after the decision had been made to use EMS levitation, but a choice had not been made between iron or air cored LSM[119]. The two section vehicle, each section weighing 68 tonnes, was designed to run at 400 km/h. The required LSM thrust of 160kN was produced by 36 rectangular magnets energised to 1.15 MAT, interacting at an air gap of 300mm with a track winding linear current distribution of 7.5 kA/m. Six magnets were installed in one of three cryostat units per section, fabricated from cast aluminium, with an all up weight of 4 tonnes per unit.

The results of the Erlangen EET-02 tests have not been published, but they are believed to have been highly successful. Despite difficulties in laying the track winding the test programme was completed on schedule at the end of 1979 and both the Erlangen test track and the ROSY test rig have been dismantled. The majority of engineers involved have been redeployed on the Emsland test track, which is being supported by a consortium of companies including the members of Projectgruppe Magnetschwebebahn[120]. There are no further plans to continue either EDS or ACLSM work in the foreseeable future.

2.4.6 UK Development

EDS development in the UK was initially funded by the Science Research Council (SRC). In September 1971 the SRC sponsored research at the University of Warwick and Cranfield Institute of Technology (CIT) to investigate the technical and economic merits of superconducting magnetic suspensions for high speed vehicles, over a twelve month period. Cranfield performed the economic analysis of fullsized revenue vehicles and their operational requirements, the configurations being mainly conventional duorail low speed suspensions, normal conducting loop or null flux levitation, and turbo-prop or LIM propulsion. The main conclusion was that such a system of maglev vehicles was economically attractive compared to aircraft at short haul, or conventional duorail trains requiring special tracks(121). Warwick analysed null flux and normal flux arrangements for vehicles that could run in trough guideways and evaluated their basic engineering design parameters and suspension characteristics(122).

In 1973, both groups received further funding, Cranfield from the Department of Environment, through the Transport and Road Research Laboratory, and Warwick from the Wolfson Foundation. Cranfield produced further economic study of duorail compatible vehicles and showed that operational and installed costs were consistently less than Tracked Hovercraft designs over many routes. First estimates were made of a far from optimum LSM design which used a dual configuration (two parallel) motor arrays. It was not thought to show significant advantages over a fixed 50 Hz LIM since the track structure became more complex, and little was known of the variable frequency operation and track section switching requirements(123).

The Warwick research project was centred on fundamental studies of levitation and propulsion concepts and was tied to design for a linear test facility. The test track was originally planned to be capable of carrying a 600 kilogramme magnetically levitated, guided, and propelled vehicle at up to 120 km/h with two passengers, or 250 km/h, unmanned. The main guideway would

have been a pier structure with a glass fibre reinforced concrete top deck to which the track conductors could be fixed. The effect of rapid inflation and a fixed value grant meant that the final design was for a 150kg unmanned vehicle on a 550 metre track with timber decking and a cable winched propulsion system.

Fairly early on in the project, tests with a three phase meander winding in a 1.5 metre diameter circle and a multipole ferrite field showed that LSM control could be achieved with low frequency starting. The armature current was 30 amperes, supplied from the slip frequency of a wound rotor teaching machine. The machine power factor was monitored to prevent pull out as the frequency supplied to the armature was raised. Reed relays around the outside of the track provided field position information which was compared to the induction motor slip frequency as an additional check on the force angle. As the experiment was successful, it was decided to build a more substantial apparatus using concentrated turns on the periphery of a 0.5 metre diameter drum, with a stationary field array of barrium ferrite magnets. The armature winding eventually consisted of 24 concentrated turns on a double layer three phase connection. Power to the winding was supplied through slip rings close to the drum axle. A commutator was included to provide position information. The double layer winding was chosen as it gave reasonable packing density at the track and easy location of the potted winding was possible. A meander winding would have required a circumferential band to prevent conductors from lifting, and this would have reduced the cooling effect of wheel windage. The drum was also fed from the wound rotor slip frequency, and with the more accurate identification of armature pole position relative to the field, satisfactory control of the machine was possible on ramp frequency starting.

In parallel with the LSM tests, experiments were carried out using nitrogen cooled copper ac coils in various topological configurations. Conventional EDS of Maglev had provided vertical surfaces for guidance but SRI had experienced lateral instabilities on their towed test vehicle. Abel explained this as being a shaded pole action as the levitation magnets passed close to the edge discontinuity formed by the vertical and horizontal aluminium track members[124]. Since CIT had shown the advantages of a flat track arrangement as being compatible with existing duorail systems, and allowing relatively easy switching, the ac coil experiments centred on flat track arrangements. It was found that by designing in a dual edge discontinuity lateral guidance could be achieved and the stiffness available was adequate from ride quality considerations, being a similar frequency to levitation. The simplest structure was a duorail of alumium sheets with a central longitudinal gap and a transverse spanning coil, overlapping in plan the guideway conductor. Although the amount of superconductor required for levitation is increased, the amount of track conductor needed is substantially reduced. The central gap also allowed a track armature winding to be positioned under the maximum vertical field of the coil array producing combined lift, guidance and propulsion.

This "flat track" design was therefore a conscious effort to produce a self cleansing guideway that was easy to fabricate and switch, could be made compatible to existing duorail systems, and provided combined levitation, guidance and propulsion with at the minimum, one tandem magnet array. Controlled lateral stiffness could be designed in depending on the coil/guideway conductor overlap. As such it was a hybrid of the CIGGT and MIT designs, CIGGT having a flat track with separate lift and guidance systems, and MIT having a free rolling vehicle in a cylindrical trough. MIT attempted to control lateral (roll) stiffness by an additional keel magnet only much later on in their research.

A study of LIM research showed that Laithwaite and Eastham's transverse flux designs were appropriate for LSM too, and would benefit a revenue design. EDS magnets tend to require length in the direction of motion with minimal transverse end conductor; LSM magnets require the opposite. For a combined system a transverse flux arrangement means that long longitudinal pole pitches, and the resulting increases in ampere turns in the magnets can be replaced by relatively short flux paths across the vehicle width. This will keep magnet ampere turns low, and reduce the magnitude of the stray field in the passenger compartment, easing the amount of shielding required to meet design limits on passenger exposure. One revenue track that was examined is shown in Figure 6a[124]. The windings have cranked end sections to minimise lost width, and can lay under the levitation conductors. The superconducting magnets are transverse flux energised providing tight lateral magnetic coupling. The LSM windings form a dual, and can be excited either separately to give yaw and roll control, or in conjunction. Width limitations on the Wolfson track meant that a single tandem magnet array had to be studied (Figure 6b). A dual LSM was later analysed by Burke for the CIGGT reference revenue vehicle[125]. The linear machines studied as possible propulsion units included homopolar synchronous, induction and synchronous. The LIM, including transverse flux varients was discarded quickly, as its dependence on small gaps for reasonable performance was incompatible with large gap EDS Maglev even when mounted on a separate gap controlled tug. Homopolar machines were considered difficult to implement because with passive track secondaries, substantial amounts of power would have to be transferred to the vehicle. It was recognised that their power factor efficiency product should be superior to a LIM[126], because air gap magnetization derives from a dc winding. Preliminary designs of LSM track windings for the Wolfson facility showed that to achieve high accelerations with a modest number of vehicle coils, the track current loading had to be high. If the

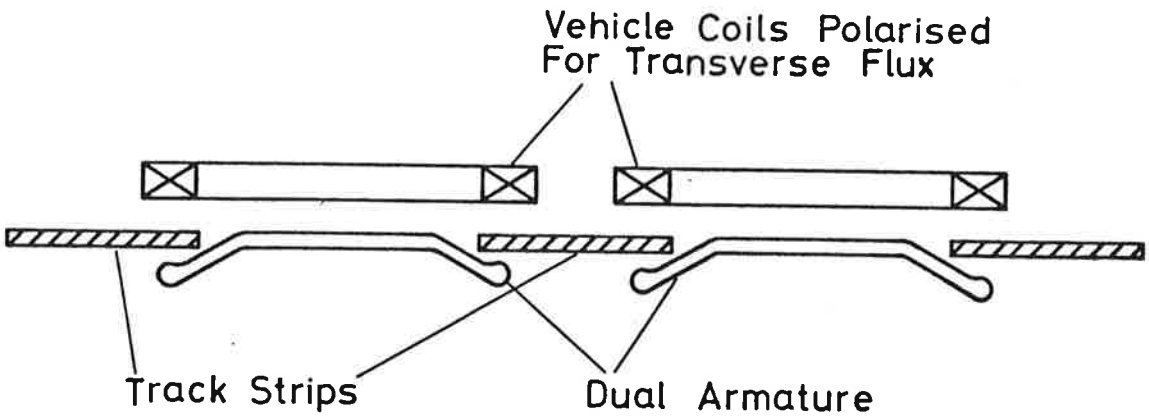

FIGURE 6a. REVENUE VEHICLE TRANSVERSE FLUX DUAL MOTOR.

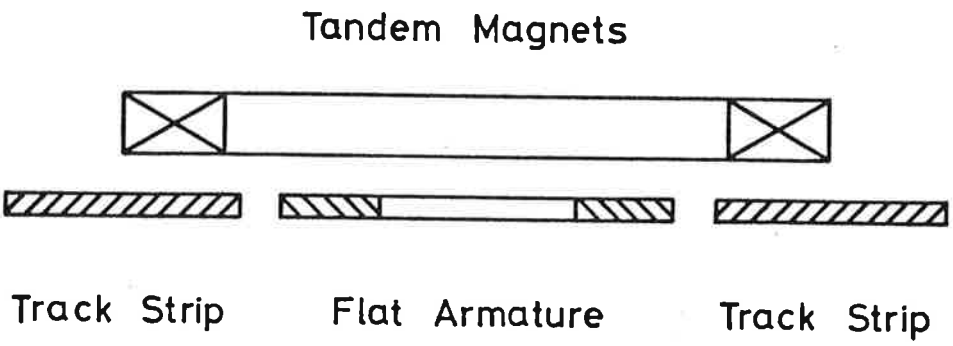

FIGURE 6b. WOLFSON TRACK ARRANGEMENT.

acceleration section (200-300 metres) was wound as one LSM unit, feeder voltage and track drop became significant for the impulse duty. The natural solution was to reduce the section length until it was slightly longer than the vehicle length, and to use trackside switches to energise the winding in response to vehicle position. In the limit the track switching could be performed on pole pitches less than the vehicle length, and the inverter or cycloconverter operation effectively transferred to the trackside. Such a machine can be described as a Linear Commutator Machine (LCM), and a parallel study of LSM and LCM was begun[124].

The three phase winding on the 0.5 metre diameter drum was reconnected as a LCM. Each coil had an individual thyristor whose gating signal was provided through moveable brushes running on the commutator. The 50Hz mains frequency was used to turn off the thyristors as the coils passed under the three pole pieces, so that the correct armature current paths were assured. By changing when the coils were energised relative to the pole positions, the machine could motor and brake. A superconducting coil 130mm square running at $3.7.10^4$ AT was designed to model winding construction techniques and coil stresses for the Wolfson coils, and was used to drive the LCM with the ferrite poles removed. The superconducing machine was successfully operated several times, and the ac induced on the superconducting magnet did not affect its stability. A public demonstration of the superconducting LCM was made at the INTERMAG Conference in London September 1975, where it aroused a great deal of comment.

After a more detailed investigation of the LSM and LCM designs, using mutual inductance and equivalent circuit models it became apparent in 1975 that construction of a linear motor on the test facility would not be possible, because of limited finance. The vehicle dimensions were shrunk to two tandem 0.4 metre square coils housed in a cryostat and body shell 2.5 metres long by 0.5 metres wide and high. The vehicle propulsion winch

was capable of driving this load up to 160 km/h. Analytical studies of the flat track were based on impedance models, and Howell and Wong investigated the stability of vehicles travelling over split guideways, as applied to revenue duties[127].

The Science Research Council awarded two further grants to Warwick to support research into ac losses in composite conductors for magnetic levitation, and power generators, and also to extend the LSM and levitation analysis by measurements taken on a newly constructed test wheel facility. The test wheel was built from non magnetic materials on a horizontal axis. The surface speed was 160 km/h to match the Wolfson facility top speed. The wheel diameter at 3 metres was made from a plywood box section built between eight aluminium I beams. Speed control was through a Ward Leonard set derived from previous Departmental MHD experiments, and the drive motor was mounted on one of the concrete bearing pedestals. The outer rim consisted of plywood laminations secured by a final multilayer addition of epoxy impregnated fibreglass[128-9]. Initial tests on levitation characteristics of split track guideways were performed on two aluminium rings that were thermally shrunk onto the wheel.

In 1976 Abel and Mahtani produced an assessment of LSM as used for maglev systems[130]. The combined system of propulsion, guidance and levitation developed at Warwick used essentially tandem arrays of superconducting coils. From the levitation and guidance viewpoint long lengths of conductor were necessary in the direction of motion, and from the propulsion point of view, long lengths were required transversely., It was important therefore to attempt to establish optimization techniques that could indicate not just specific parameter optima, but also their sensitivity to change in the other base parameters. The assessment also clarified the wavelength optimisation for specific vehicle length. Thornton had previously tried to optimise wavelength on the basis of

thrust per pole maximization. However this assumes that vehicle length is unlimited, and the vehicle's thrust requirement can be matched by merely adding poles as necessary. A preferable approach provides maximization of thrust per unit of active conductor times current, which results in a wavelength choice about 1/3 of the MIT value. By performing a cost analysis, MIT, CIGGT and a full size LCM design with a 300 metre excited length were compared. It was discovered that wavelength choice is only loosely coupled to overall cost, so for a combined system a LCM with a relatively long pole pitch (to suit lift and guidance stiffness requirements) does not in fact pay a heavy penalty, and can be shown to be marginally cheaper than the other two systems.

Another study investigated the sensitivity of design to changes in coil shape[131]. Abel evaluated the coil stresses and field variations that occur as a rectangular or square coil changes its corner radius until a racetrack or circular coil is formed. Howell used the impedance modelling technique to establish the change in lift to drag ratio and lateral stiffness of an array of coils with a split track. It was found that from the coil stressing criteria, circular coils were preferable, but the motor performance suffered, requiring increased ampere turns or increased active length. The latter requirement is in conflict with lift to drag and lateral stiffness of circular coils, which require decreased split gap to maintain adequate values. The drag magnitude also increases with a circular array. The parameters can all be carefully manipulated to provide adequate standards of ride quality with reasonable stress increase factors on circular coil standards. Even for the worst case of a circular array the split track geometry shows economic advantage over other track designs.

In 1977, Leonhard published a comparison study of the EMS and EDS systems proposed by the Maglev groups in Germany[132]. In the comparison

power consumption figures were given which suggested at first sight that EDS vehicles use over two and a half times as much active power as EMS vehicles. In order to establish the exact power balance in each of the cases, Abel examined the source material of the designs and presented it in such a way that active and reactive power requirements for different operating regimes were totally qualified[133-4]. The main conclusions were that the EDS LSM was the most suitable form of propulsion for 400 and 500 km/h, the iron cored long stator LSM for EMS appeared to have reasonable characteristics at 400 km/h but these were degraded at 500 km/h, and that the LIM's studied by the Germans were unsuited to 500 km/h and did not perform particularly well at 400 km/h. It was obvious from the study that a strict comparison of system lift to drag ratio and specific power were insufficient to fully define the operating parameters, and a lot more detail was required.

In a continuation of the study it was shown that the German EDS design was further penalised by not adopting the aerospace type vehicle structure used by other EDS design groups[135].

Assembly difficulties had arisen with the Wolfson cryostat. Because the lid and body were made to be light weight structures, the side mating flange was of insufficient thickness to allow repetitive joining. Distortion of the body had to be pulled out when the lid was fitted. Despite many attempts, an adequate vacuum was not achieved on the cryostat, and persistant cold leaks occurred on the coil and helium fill structure. A new lid was constructed with bracing ribs which were finally adequately secured by Alvis Ltd, who welded an additional flange onto the lid and base. The box could then be pulled to better than 10^{-6} torr and it was hoped that cryopumping would be possible from the coil assembly to further reduce the vacuum.

Both the LN_2 radiation shield and the coil assembly had insufficient attention paid to balancing the flow paths of liquid and gaseous nitrogen

and helium. The coil assembly had only a single 10mm tube for both fill and vent. Consequently there was no possibility of circulating cold gas through either structure. The coil assembly was repiped and the Rutherford Laboratory performed a nitrogen quench and leak checks on the structure. On its return to Warwick the coil assembly was rechecked for integrity. The radiation shield had had several unsuccessful attempts at cool down to nitrogen temperatures within the cryostat. Although there was no apparent cold leak into the interspace, support heat leak, radiation and high coolant path resistance resulted in a steady state being reached with the nitrogen shield at about 100K, and no liquid being retained. The radiation shield was discarded and the coil assembly was wrapped with superinsulation from Thor Cryogenics. The assembly was never completed because of lack of funding.

The Wolfson track was used for aerodynamic studies both under the initial funding, and then under separate SRC research by Howell. The 3 metre test wheel was successfully run by Mahtani, with published results of levitation tests on the split track, using first the small superconducting coil built and used on the 0.5 metre drum, and then using liquid nitrogen cooled pulsed coils. SRC further sponsored the continuation of work on the test wheel, and an interim report described progress[136]. A LSM design for the wheel by Rakels was included, and details of a 375 kVA inverter that Brush had used on the Mickleover LIM tests and loaned to the Maglev Group were given. It was hoped that the next stage of development would be a full width winding on the wheel with a multipolar field assembly of superconducting or liquid nitrogen cooled pulsed coils. The wheel tests would confirm machine performance and establish control concepts incorporating active ride quality manipulation.

Towards the end of 1978 and in early 1979 a cooperative research programme was suggested which would revive interest in air cored LSM in the UK. The basic concept was for a hybrid system of transportation which

used the state of the art in both conventional wheeled vehicles and linear synchronous motors[137-9]. By producing for example a LSM propelled Advanced Passenger Train, the advantages of APT tilting suspension and novel bogie design could be married with the simple track structure and ease of control and non contact transfer of thrust achieved by a LSM. Such a hybrid would be capable of operating on existing infrastructure, and would have initial lower first cost to conventional electrification schemes. The programme involved industry and the SRC in a cooperative funding of LSM research on the Warwick 3 metre wheel and 550 metre track facilities. Although the industrial sponsors were keen to persue the development, they required at least British Rails' tacit approval of the scheme. Unfortunately BR failed to provide such approval and the application to SRC was not made. It is interesting to note with hindsight that of the parties involved in the first programme discussion meetings, namely British Rail, BICC, Balfour Beatty, Brush, Farebrother, Thor Cryogenics, the first four make up the new People Mover Group formed shortly afterwards to develop the British Rail EMS Maglev installation for Birmingham Airport[72]. The purpose of promoting an exportable system is the same aim as discussed in the meetings at Warwick.

British Rail had performed their own research into LSM and EDS following discussion with Warwick University in 1976. Their funding came directly from the Department of Transport under an Advanced Ground Transport Consultancy Contract, to look at areas which were thought to have limited theoretical and experimental data. A linear desk top model was constructed, on which no meaningful measurements of force could be made, because of incorrect choice of field to armature ampere turns ratio[140].

2.4.7 French Research

French research into EDS and LSM propulsion has been mainly the concern of SNCF's Technical Division Research Department. Both EDS and EMS were the subject of a technical evaluation program which produced a design methodology for magnetically levitated and linear motor propelled trains. SNCF wrote a computer based model SYSMAG (Systèmes Magnétiques) which could calculate performance characteristics of the two Maglev systems[141]. The model was based on cooperative work from the Battelle Institute, Geneva, and the Institut National Polytechnique, Grenoble. LSM analysis was given a similar treatment, and a simplified theory and performance evaluation based on gradients of mutual inductance between conductors was encompassed in a programme called MOSYN[142]. In common with British Rail, SNCF saw no conceivable future for Maglev in a European context.

2.5 Other Machine Variants

This section describes those remaining machines that have not been specifically mentioned with the previous suspension systems. The three main types are linear induction motors, including the combined ac propulsion and guidance/suspension systems of Rohr, Boeing, and Laithwaite and Eastham; iron cored linear synchronous and reluctance machines, especially those with a dc bias winding, and the JNR linear dc machine development.

Linear induction machines have inspired the large majority of linear machine research effort throughout the world over the last twenty years. There are two major specialist books on the subject[143,144], a bibliography[145], and a multitude of descriptive and qualitative articles[eg 146-9]. Although the German EMS Maglev Group have abandoned LIM as being suitable for speeds of 400 km/h, JAL propose to use single sided LIM (SLIM) for 300 km/h. The low power factor-efficiency product provoked investigation of iron cored LSM with a dc winding on the

stator providing the bulk of the airgap magnetization; the power supply sees a higher power factor as a result and the product is significantly improved. However the trade off of increased track structure cost and the energy cost is far from simple, and relatively complex analysis of the machines and their operating cycle are required before adequate judgement can be made between the two options.

JNR have developed an air cored track, iron cored field linear dc machine which uses thyristor commutation. The characteristics of the machine make it suitable for 300 or 500 km/h operation and it provides a backup development to the main cryogenic LSM and EDS research.

2.5.1 Linear Induction Machines

2.5.1.1. Linear Induction Motor Research Vehicle

The Linear Induction Motor Research Vehicle (LIMRV) was built by AiResearch Manufacturing Company[18,150] to meet the Department of Transportation's requirement for full sized linear induction motor testing. The vehicle was meant to run on a 35km oval track at Pueblo, although only 10km were eventually built. It was felt that this vehicle would give insight into large LIM operation and characteristics that could be applied to other transport systems, such as high capacity brakes, classification yards, magnetic levitation and air cushion vehicles. The LIMRV suspension and guidance was derived from a set of steel wheels on steel rail, at standard gauge. Because of the relative unknowns of vehicle-track dynamic interaction at speeds up to 400 km/h, British Rail were consulted during the suspension design.

The double sided forced air cooled 1.86 MW LIM was supplied with variable voltage and frequency from a 3MW alternator which in turn was driven through a reducing gearbox from a gas turbine. There was therefore no need for current pick up. The aluminium alloy reaction rail was a hollow extrusion held to bed plates by spring clips, and welded every 30 metres to the next section. The stator was guided about the reaction rail by four

pairs of wheels, and was separately linked to the main vehicle frame. The LIM used a conventional five-sixths pitched double layer winding with diamond coils, and the lower end windings were cranked at right angles to the slots to allow a shorter reaction rail to be used. Table VI gives details of the LIM and Vehicle.

The contract from DOT was begun in March 1965 and design and construction of the LIM began in July 1967, followed a year later by the vehicle. Static tests of the LIM were carried out in 1969, and throughout 1970 till March 1971, the whole vehicle and installed LIM were given proving tests on a 500 metre track at the AiResearch Works in Torrence, California. The inaugural LIMRV run was made at the official opening of the Pueblo Test Center with the DOT Secretary Volpe on board[20], in May 1971. Subsequent tests on the LIMRV were carried out at various speeds on the 10km track, and it was decided that instead of completing the 35km oval, it would be cheaper to use two jet thrust boosters attached to the vehicle body. These allowed a maximum speed of 410 km/h to be reached on 14 August 1974, and running tests of the LIM at full speed and thrust within the short track length[151]. In late 1976 and 1977, tests were made with varying numbers of poles, to investigate the changes in LIM performance by extending the iron to the rear of the primary excitation. This was effected by exciting only the front five poles of the stator, and comparisons with only the rear five poles suggested that improvements with trailing iron were only minimal[152]. Selective pole excitation allowed investigation of the mmf air gap waves induced by the finite length of the primary current sheet, or so called end effect waves[153]. It was planned to convert the track to a single sided configuration in 1978. The LIMRV has had major implications in confirming theoretical calculations, and the DOT have used and collated five different theories, namely those of Elliott, Bolton, Oberretl, Yamamura and Mosebach. In the majority of cases the models predicted thrust and real input power fairly

TABLE VI LINEAR MACHINE TEST TRACKS

Vehicle	LIMRV	ICTS,TV1	BRAFM-1	RTV	DCLM
Length x width x height, m	17.5 x 3 x 2.13		2 car DMU		6 x 1.6 x 0.7
Maximum speed, km/h	410	72	80		200
Guideway					
Location	Pueblo	Toronto	Mickleover	Loughborough	Tokyo
Length, km	10	2.5	0.240	0.080	0.500
Motor					
Type	DSLIM	SLIM	SLIM	HELSM	DCLM
Manufacturer	AiResearch	Thomson	Brush	Brush	JNR
Type No		TLM 134	BRAFM1		
Weight, tonne	2.95	0.57	0.263		3.3
Thrust, kN	16.7	11	6		20
Voltage, V	0-1040	0-600			
Frequency Hz	0-173.3	0-40	0-50		
Armature Current, A				20	24kAT
Field Current, A				55	116.85 kAT
Power, kW	1865	130			~1500
No Poles	10	6	8	5	8
Pole Pitch, m	0.3556	0.287		0.18	0.60
Length, m	3.81	1.935	1.1	~0.99	4.8
Airgap, mm	38.1	11	~13	10	85
Synchronous Speed, km/h	450		86.4		
Track					
Thickness, mm	6.35				
Width, m	0.546		0.2		
Material	6061-T6Al	Al+Fe	Al+Fe	Fe	

close to measured values[152]. They also all predicted similar airgap flux density distributions which showed a marked difference to the measured values, due mainly to additional leakage flux in the real machine producing a much higher value of slot leakage inductance. The consequence was optimistic estimates of power factor and reactive power levels.

2.5.1.2 Transverse Flux LIM

Laithwaite and Eastham were primarily responsible for developing the transverse flux LIM[154] (TFLIM). With conventional axial flux design, the pole pitch of a machine running at high speed would have to be large for 50 or 60 Hz operation, and the core depth and hence primary mass would also be large. Although variable frequency to higher frequencies would partly solve the length of pole pitch required, the payload of a vehicle would be reduced with an on board inverter. By examining the topology of the magnetic and electrical circuits, a transverse flux arrangement showed positive advantages. Primarily the core need only carry the slot flux rather than the pole flux, reducing the back iron depth, which is now independent of pole pitch.

A small machine was built by Linear Motors Limited and tested on the RTV41 test track at Tracked Hovercraft Limited, which was later passed to Brush Electrical Machines at Loughborough. The concept of the TFLIM was further extended to that of the "Magnetic River"[155] where the machine was proposed to give levitation, guidance and propulsion, by careful design of the magnetic and electrical circuits. This total suspension design was later suggested to be uneconomic in the primary reactive power requirement for the machine, when used as a high speed vehicle propulsion unit, but a TFLIM which provided one other force, either guidance or levitation was considered to still perform better than a conventional axial flux LIM[156] (AFLIM). The experimental work at Brush also confirmed that while TFLIM were more easily constructed and could generate additional forces compared to AFLIM, neither showed particular promise for high speed

propulsion simply because of the low power factor efficiency product[157].

2.5.1.3 ROMAG

J A Ross developed a system called ROMAG at Rohr Industries Inc. in 1970, which used a linear induction motor to provide both lift and thrust[17,158,159]. The track could be solid ferromagnetic rails for cruise, and laminated when higher thrust efficiency is required. The rails could also be notched to provide reluctance motor operation, and for even higher thrusts, short circuit bars could be placed in the track steel to give an effective damper cage winding. Two vehicles were built, a 20 passenger configuration which was demonstrated at Transpo '72 and a 6 passenger suspended vehicle at Rohr's Chula Vista test track. Both vehicles used a motor at each corner and PWM inverters. Preliminary reliability assessment gave meantime between failures of 53 thousand hours of operation.

In 1979 Boeing Aerospace Company received a research and development contract from UMTA to develop an integrated magnetic levitation and propulsion conceptual vehicle, which could carry 12 passengers at 65 km/h[160]. Boeing acquired worldwide rights to ROMAG technology and renamed the system Mag-Transit. The project will involve building a full size prototype vehicle and test track. The power collection will be at 600v dc and power FET PWM inverters will allow high conversion efficiencies. The track will use an aluminium cage winding in a laminated rail.

2.5.1.4 Integrated Suspension/Propulsion System

ROMAG was initially aimed at low speed urban vehicles, but Rohr also proposed the use of LIM as an integrated suspension/propulsion system (ISPS), in 1974 for speeds up to 500 km/h. The US DOT sponsored an analytical modelling and laboratory experimentation program under TARP control[21], with the Metrek Division of the Mitre Corporation

producing the analysis and design, the Rohr Corporation fabricating the LIM, and the CIGGT performing the experiments on the Queen's University Test Wheel. Mitre's preliminary calculations suggested that it was possble to offset the SLIM to the reaction rail to provide guidance forces (as with the Krauss-Maffei EMS). The analysis combined a two dimensional field approach to obtain self and mutual inductances and a circuit approach to evaluate thrust, lift and guidance forces, and allowed adequate description of transverse edge effects[161-2].

The reaction rail was fitted to the CIGGT test wheel plywood rim, and the existing geared 110kW dc motor used to propel and brake the SLIM. Additional braking was required for full motoring operation, and locomotive type air brakes were used on a steel hub disc. The main parameters of the motor are given in Table VII. The stack length was 1.73 metres with 6 poles and half filled end slots. The Reliance Electric Company supplied the 200 kVA (350kVA peak) PWM inverter[163-5].

Two reaction rails, a cage rail and a solid steel rail have been tested; it is planned to study a sheet reaction rail by mounting an extruded cap onto the steel rail, to allow comparisons of three main rail configurations. Typically the tests performed ran the curved face SLIM at an air gap of 15mm and search coil data for airgap, tooth root and tip, pole and yoke flux densities were recorded. The primary was mounted in a force balance so that the six degrees of freedom could be measured, at speeds of up to 90km/h. Performance characteristics were measured throughout the plugging, motoring and dynamic braking speed regimes. The conclusions of the tests were that end effects did not dominate the design at the measured frequencies and speeds. For the steel rail secondary, it was found that transverse edge effects are apparently insensitive to rail widths greater than core width.

TABLE VII LINEAR MACHINE TEST RIGS

Wheel	ISPS	HELSM	HLSM	Toronto	Sussex	DCLM
Diameter m	7.8	1.1	1.4	1.98		1.73
Tip speed km/h	72	~68	402	108	18	500
Location	Kingston	Nottingham	Schnectady	Toronto	Falmer	Tokyo

Motor						
Type	SLIM	HELSM	HLSM	HLSM	LRM	DCLM
Manufacturer	Rohr	Brush	GE			JNR
Weight kg				93		
Thrust N				240		
Voltage V	0-460		140		0-30	800
Frequency Hz	5-56	0-50	0-394.3	0-138	0-20	
Armature Current A	50-500	30.5	370	60		8.32kAT
Field Current A		80		15		
Power kW		~12	112			
No poles	6	6		3	4	1
Pole Pitch mm	250	180	141.7	109.2	150	
Chording	7/9		5/6	5/6	5/6	
Length m	1.73	1.15	0.85			
Stack Height mm	100		76			
Stack Width mm	101	400	410	55	152	
Airgap mm	10-30	20	15.2	5-10	12.5	

The maximum operational speed would be determined by the specific weight of the power conditioning unit (PCU), accepting that minimum airgap, required guidance to lift ratio, minimum acceptable lift to weight ratio for the SLIM have to be selected from mechanical considerations. With accepted state of the art values, maximum speed of an ISPS system can be approximately 300 km/h.

2.5.1.5 Intermediate Capacity Transit System (ICTS)

Following on from the Canadian Government's involvement with the Krauss Maffei scheme for a Toronto transportation system, the Urban Transportation Development Corporation (UTDC) were commissioned in 1975 to design, construct and test a rapid transit system which could provide a high level of service in the range of 5-15 thousand passenger per hour in both directions. UTDC's main contractor was Canadair Services Ltd (CSL) who designed a steerable axle truck to allow tight radii and low wear rates to be achieved[116]. Spar Aerospace Products Ltd designed and built various SLIM which were tested on their own 400 metre track[167-168]. The UTDC constructed a test centre at Kingston and this included a 2.5km track with LIM reaction plate, steel rails and current pickup. A six percent gradient was built into the track and a 35 metre radius curve formed part of a loop around a mockup station platform and pair of sidings with maintenance shed[169,170]. The centre was opened on 29 September 1978, and the prototype test vehicle TV1 began the experimental system evaluation. The LIM for the ICTS, TLM134 was manufactured by Thomson Electrical Works Ltd and used a diamond 4 slots per pole winding in a 6 pole 1.935metre long stator. Motor details are given in Table VI. The motor was rigidly fixed to the steerable truck axles' bearings with a three point suspension system. The nominal airgap of 11mm is increased at the centre of the stator by a set bow to accommodate unequal thermal expansion within the stator. Air cooling in motion is assisted by ten fans over the stator end heads. The motor slip frequency was varied in conjunction with