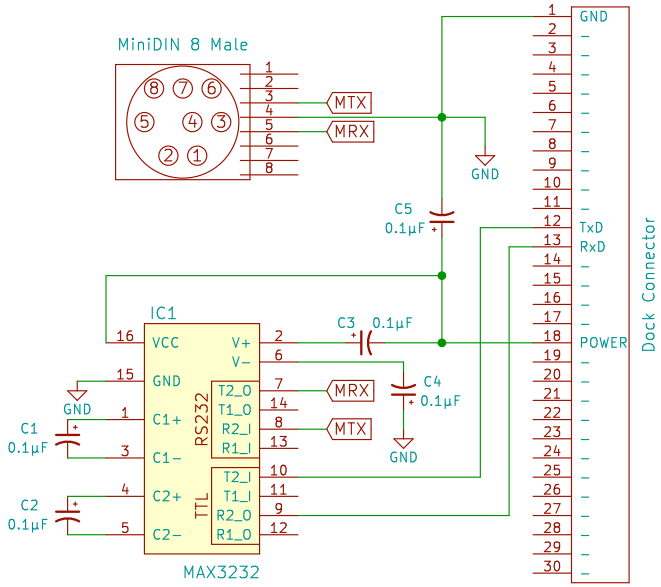

Sheet: /
File: DockToMac.sch

Title: iPhone Dock Connector to Mac Serial cable

Size: A4	Date:	Rev:
KiCad E.D.A. kicad 4.0.2-stable		Id: 1/1