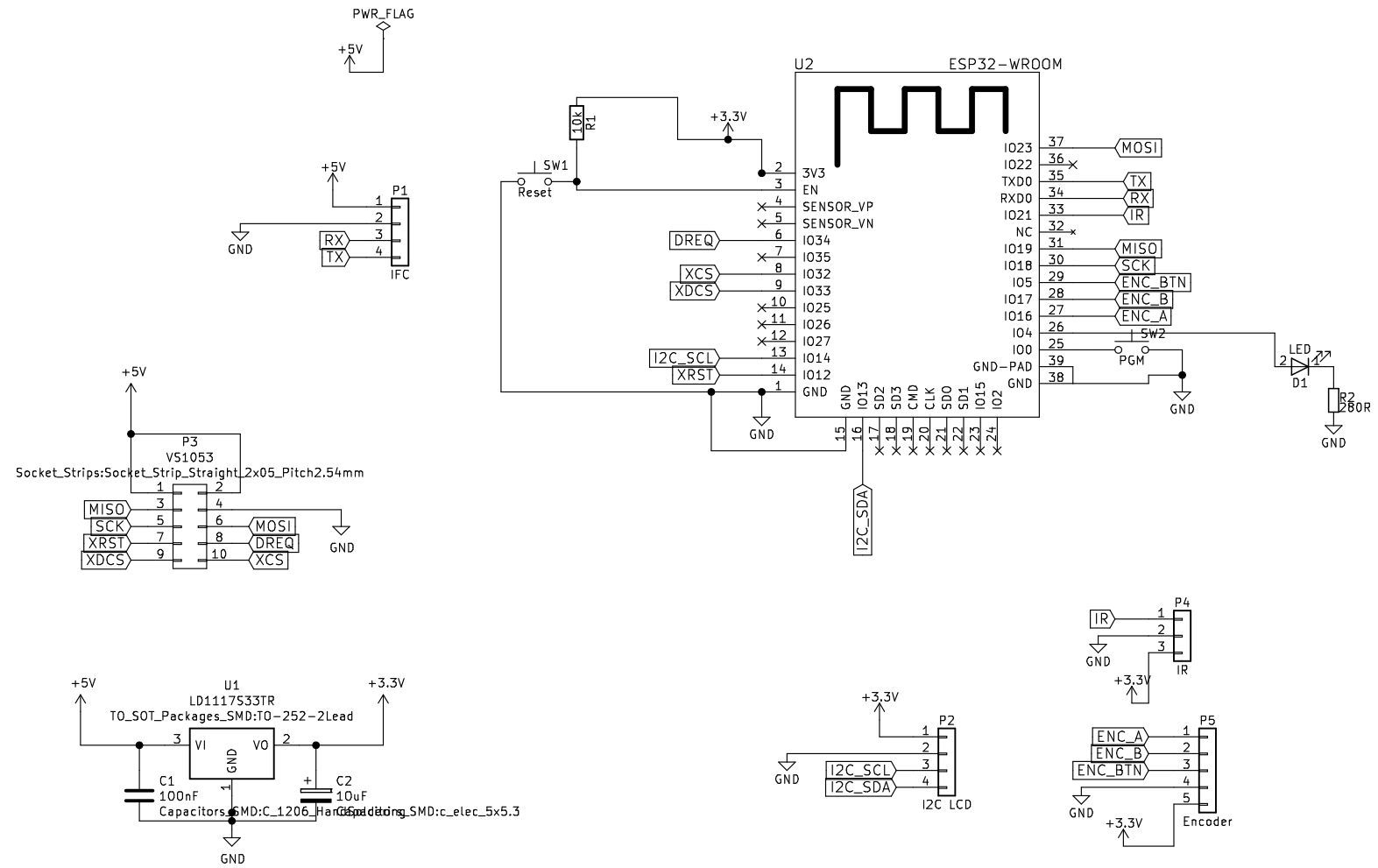

Sheet: /
File: ESP32.sch

Title: Ka-Radio32 Module

Size: A3	Date: 2018-02-17	**Rev: 1.0**
KiCad E.D.A. kicad 4.0.7		Id: 1/1