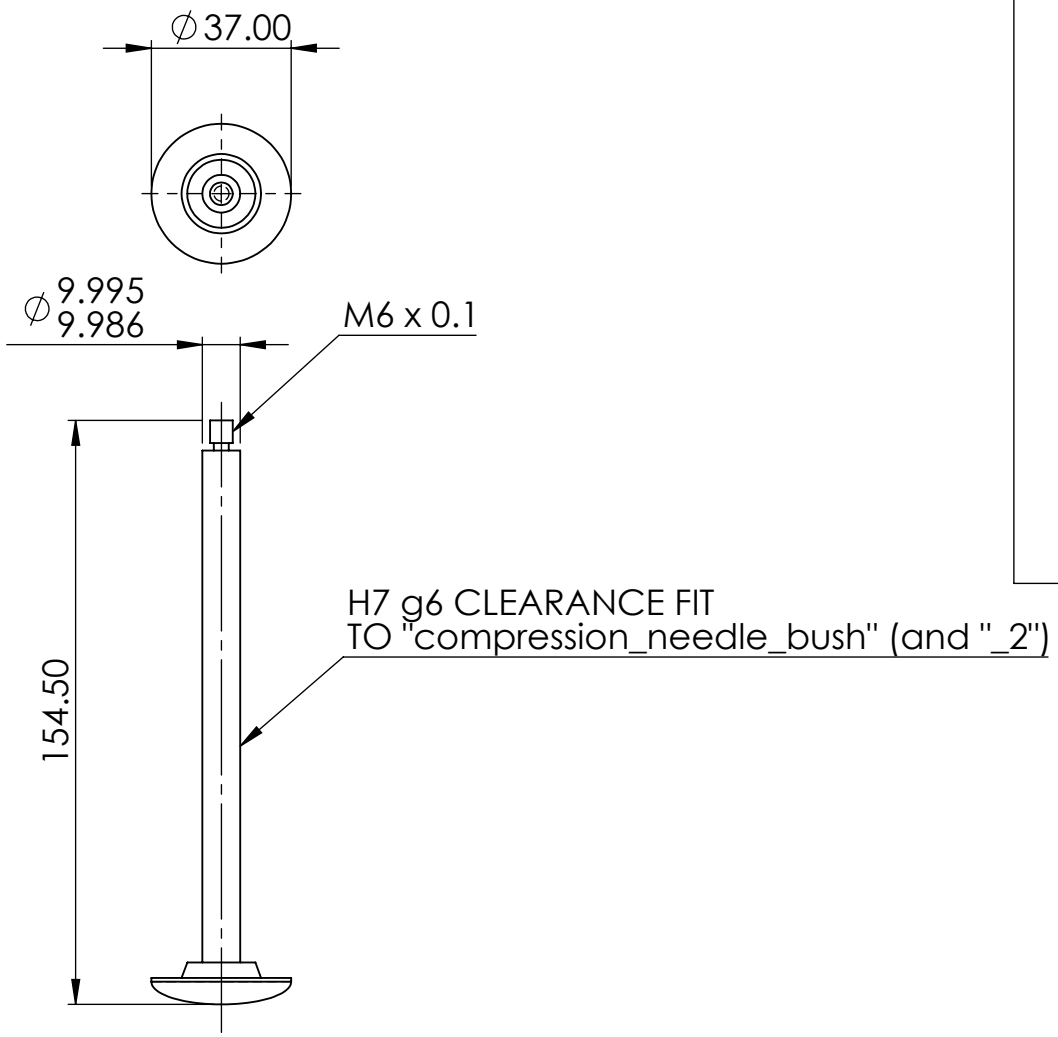

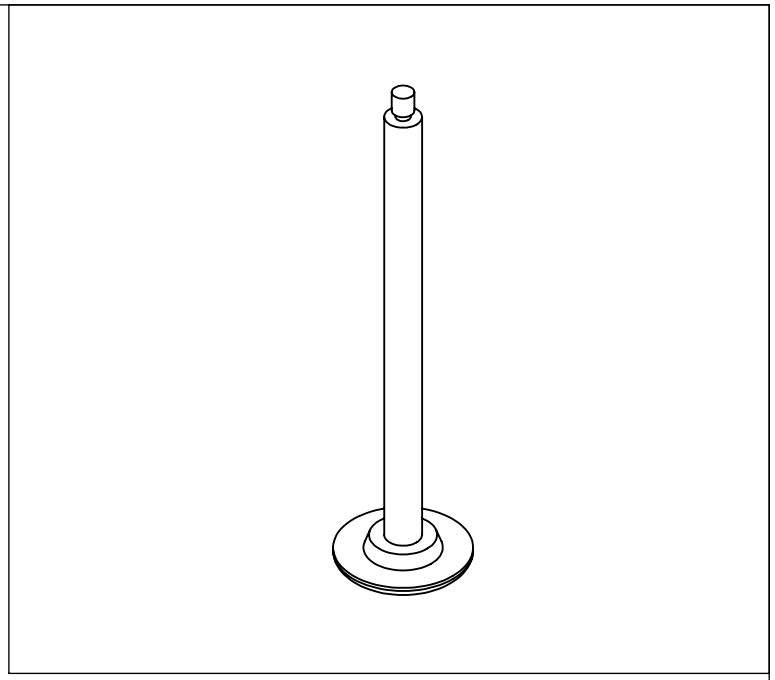

QUANTITY: 1

FOR DETAILED PART GEOMETRY PLEASE SEE SUPPLIED 3D CAD FILE (OTHER FORMATS CAN BE SUPPLIED)

FAQ CONTACT GAVIN WHITE
E: G.WHITE19@IMPERIAL.AC.UK
M: +44 7366869898

TOLERANCES		THIRD ANGLE PROJECTION
X = ± 0.5 X.X = ± 0.1 X.XX = ± 0.02	ANGULAR ±1° SURFACE FINISH MACHINED FACES Ra 6.3	

	NAME	DATE
DRAWN	G. WHITE	06/01/21
CHECKED		
APPROVED		

MATERIAL:
STAINLESS STEEL (ANY)

ALL DIMENSIONS ARE IN MILLIMETRES

DO NOT SCALE DRAWING

A4 | SCALE 1:2

TITLE:
compression_needle

DWG No.
compression_needle

Imperial College London
Department of Mechanical Engineering

SHEET 1 OF 1 | REVISION