Qualcomm
TECHNOLOGIES, INC

QUALCOMM
2016-05-17 06:18:41 PDT
deon_zhang@askey.com.tw

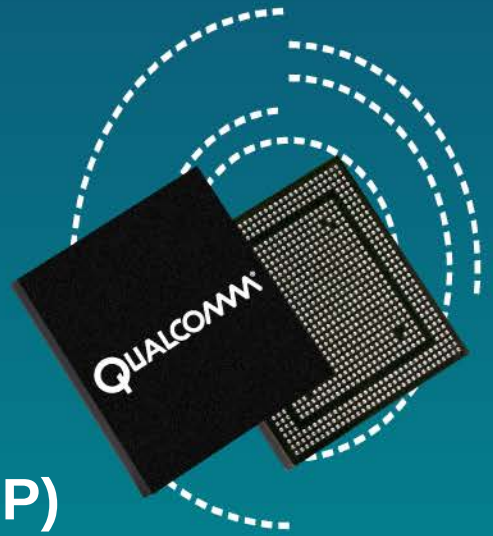

Interprocessor Communication Between MDM9x35 and Third-Party Apps Processor (AP)

80-NH740-50 A

Confidential and Proprietary – Qualcomm Technologies, Inc.

Restricted Distribution: Not to be distributed to anyone who is not an employee of either Qualcomm or its subsidiaries without the express approval of Qualcomm's Configuration Management.

Confidential and Proprietary – Qualcomm Technologies, Inc.

NO PUBLIC DISCLOSURE PERMITTED: Please report postings of this document on public servers or websites to: DocCtrlAgent@qualcomm.com.

Restricted Distribution: Not to be distributed to anyone who is not an employee of either Qualcomm or its subsidiaries without the express approval of Qualcomm's Configuration Management.

Not to be used, copied, reproduced, or modified in whole or in part, nor its contents revealed in any manner to others without the express written permission of Qualcomm Technologies, Inc.

Qualcomm reserves the right to make changes to the product(s) or information contained herein without notice. No liability is assumed for any damages arising directly or indirectly by their use or application. The information provided in this document is provided on an "as is" basis.

This document contains confidential and proprietary information and must be shredded when discarded.

Qualcomm is a trademark of QUALCOMM Incorporated, registered in the United States and other countries. All QUALCOMM Incorporated trademarks are used with permission. Other product and brand names may be trademarks or registered trademarks of their respective owners.

This technical data may be subject to U.S. and international export, re-export, or transfer ("export") laws. Diversion contrary to U.S. and international law is strictly prohibited.

Qualcomm Technologies, Inc.
5775 Morehouse Drive
San Diego, CA 92121
U.S.A.

© 2013 Qualcomm Technologies, Inc.
All rights reserved.

Revision History

Version	Date	Description
A	Dec 2013	Initial release

QUALCOMM
2016-05-17 06:18:41 PDT
deon_zhang@askey.com.tw

Confidential and Proprietary – Qualcomm Technologies, Inc. | MAY CONTAIN U.S. AND INTERNATIONAL EXPORT CONTROLLED INFORMATION

Contents

- MDM9x35 + Third-Party Apps Processor (AP)
- RIL/QMI
- QMI Control Path
- RmNet Data Path
- RIL/QMI Implementation Guide
- References
- Questions?

QUALCOMM®
2016-05-17 06:18:41 PDT
deon_zhang@askey.com.tw

Confidential and Proprietary – Qualcomm Technologies, Inc. | MAY CONTAIN U.S. AND INTERNATIONAL EXPORT CONTROLLED INFORMATION

MDM9x35 + Third-Party Apps Processor (AP)

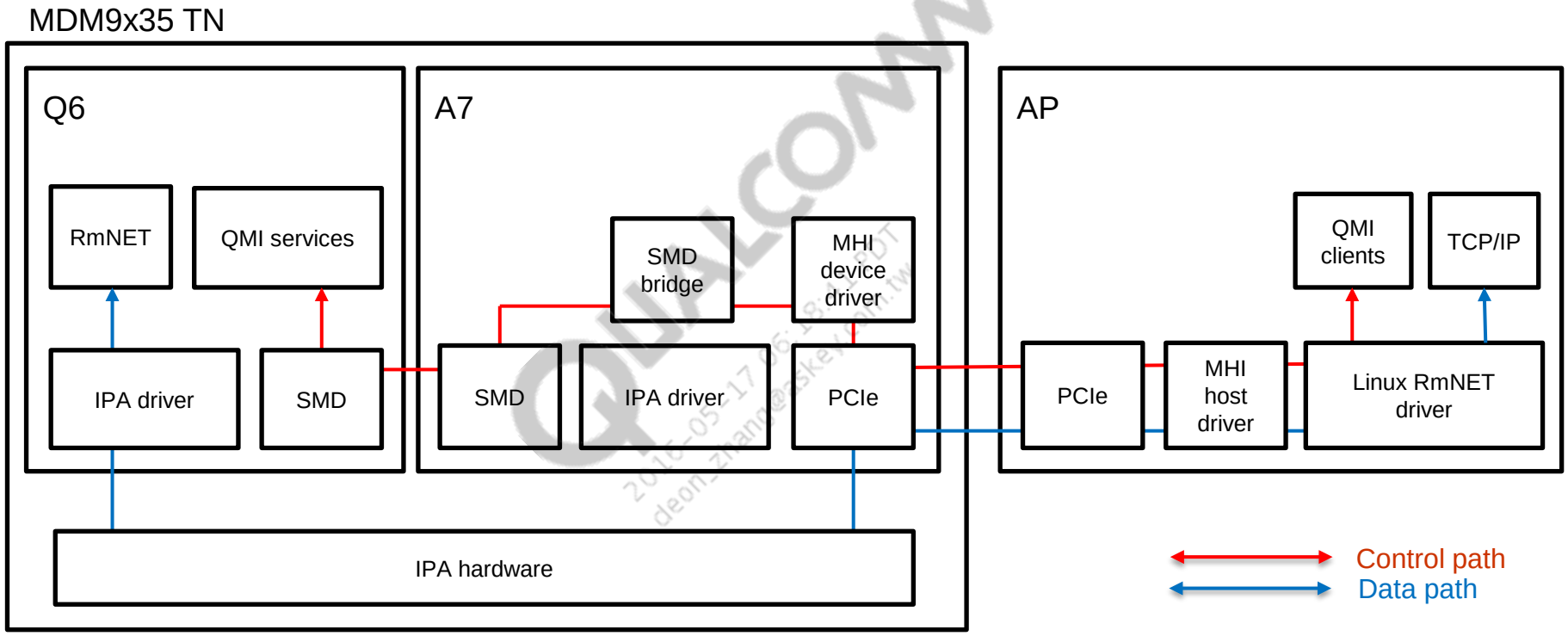

Confidential and Proprietary – Qualcomm Technologies, Inc. | MAY CONTAIN U.S. AND INTERNATIONAL EXPORT CONTROLLED INFORMATION

RIL/QMI

- RIL
  - The RIL interface may vary depending on the HLOS, e.g., Android™, Windows Mobile, etc.; Android is the example in the diagram.
  - Communication between the AP and the modem can be a QMI or an AT command, etc. It is recommended that customers use QMI.
- QMI message library
  - The QMI message library is used to encode/decode QMI messages.
  - QTI provides a QMI message library for reference; it does not cover all QMI messages.
- Qmux
  - Qmux multiplexes QMI messages against different services, i.e., voice, SMS, etc.

QUALCOMM®
2016-05-27 08:18:41 PDT
deon_zhang@skey.com.tw

QMI Control Path

- QMI control path
  - QMI on third-party AP↔PCIe driver on third-party AP↔PCIe driver on A7↔SMD bridge on A7↔SMD on Q6↔QMI services on Q6
- AP-side PCIe driver
  - There is an open source PCIe driver for the QTI hardware platform

QUALCOMM
2016-05-17 06:18:41 PDT
deon_zhang@askey.com.tw

Confidential and Proprietary – Qualcomm Technologies, Inc. | MAY CONTAIN U.S. AND INTERNATIONAL EXPORT CONTROLLED INFORMATION

RmNet Data Path

- Data path
  - Data app on third-party AP↔PCIe driver on third-party AP↔PCIe driver on A7↔IPA driver on Q6↔RmNet on Q6
- PCIe driver
  - There is an open source PCIe driver for the QTI hardware platform

QUALCOMM®
2016-05-17 06:18:41 PDT
deon_zhang@askey.com.tw

Confidential and Proprietary – Qualcomm Technologies, Inc. | MAY CONTAIN U.S. AND INTERNATIONAL EXPORT CONTROLLED INFORMATION

RIL/QMI Implementation Guide

- RIL
  - Assume that OEMs are working on Android as the third-party AP
  - Two sets of RIL commands
    - Solicited commands are originated by the RIL library, i.e., DIAL and HANDUP
    - Unsolicited responses are originated by baseband, i.e., CALL_STATE_CHANGED and NEW_SMS
  - QMI clients are used to communicate with QMI services on the modem side, e.g., voice, SMS, etc.
  - Initializes the RmNet data path for data calls
- QMI message library
  - QMI message format specifications are available for customers
  - Encodes/decodes QMI message
- Qmux
  - Qmux header format specifications are available for customers
  - Uses service ID to multiplex QMI messages
  - Encode/decode the Qmux header

QUALCOMM
2016-05-17 06:10:41 PDT
deon_zhang@askey.com.tw

Confidential and Proprietary – Qualcomm Technologies, Inc. | MAY CONTAIN U.S. AND INTERNATIONAL EXPORT CONTROLLED INFORMATION

References

Ref.	Document	
Qualcomm Technologies		
Q1	*Application Note: Software Glossary for Customers*	CL93-V3077-1
Q2	*Qualcomm MSM™ Interface (QMI) Architecture*	80-VB816-1

QUALCOMM®
2016-05-17 06:18:41 PDT
deon_zhang@askey.com.tw

Confidential and Proprietary – Qualcomm Technologies, Inc. | MAY CONTAIN U.S. AND INTERNATIONAL EXPORT CONTROLLED INFORMATION

QUALCOMM®
2016-05-17 06:18:41 PDT
deon_zhang@askey.com.tw

Questions?

https://support.cdmatech.com

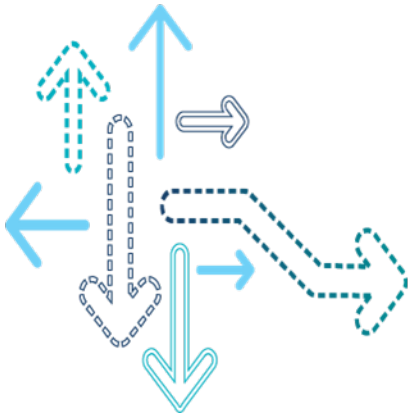

Confidential and Proprietary – Qualcomm Technologies, Inc. | MAY CONTAIN U.S. AND INTERNATIONAL EXPORT CONTROLLED INFORMATION