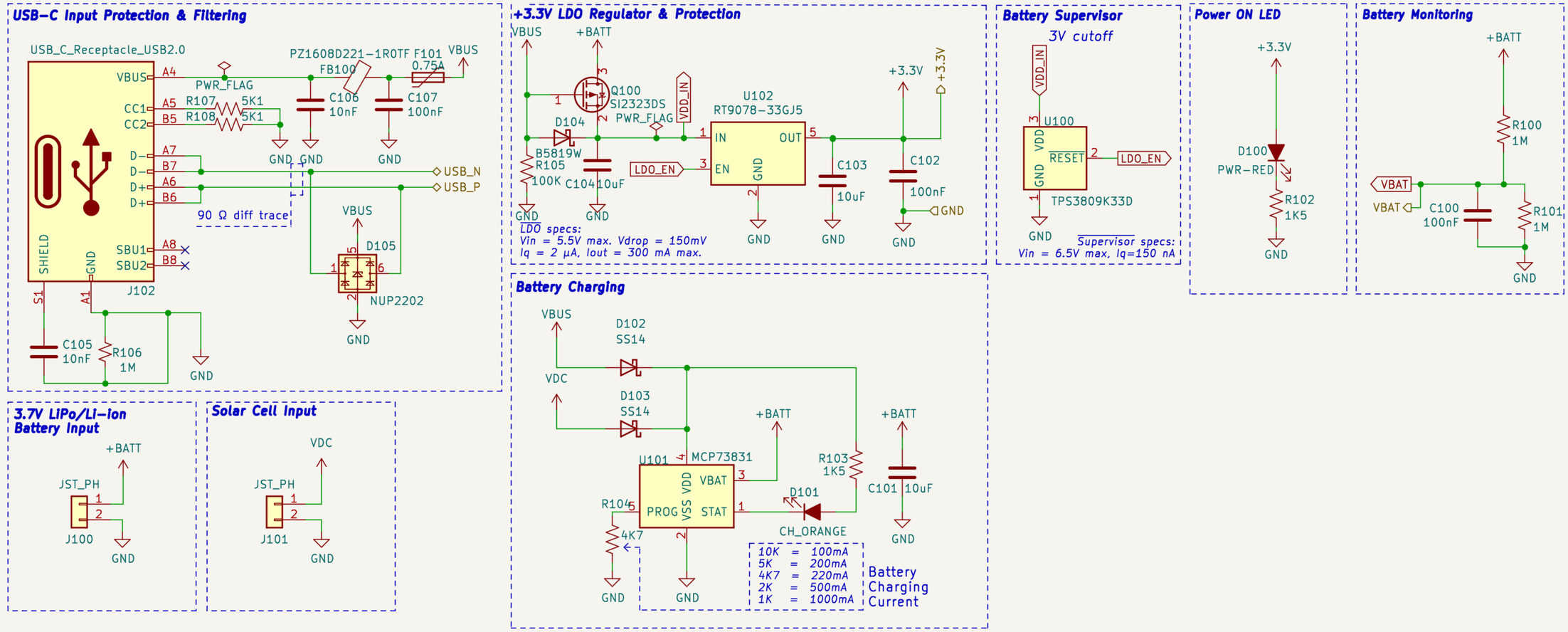

CITI Lab

Sheet: /Solar Panel Charger/
File: solar_panel.kicad_sch

Title: Lora UWB IoT Board – Power Supply

Size: A4	Date: 2024-01-30	**Rev: v0.1**
KiCad E.D.A. kicad (6.0.0-0)		Id: 4/3