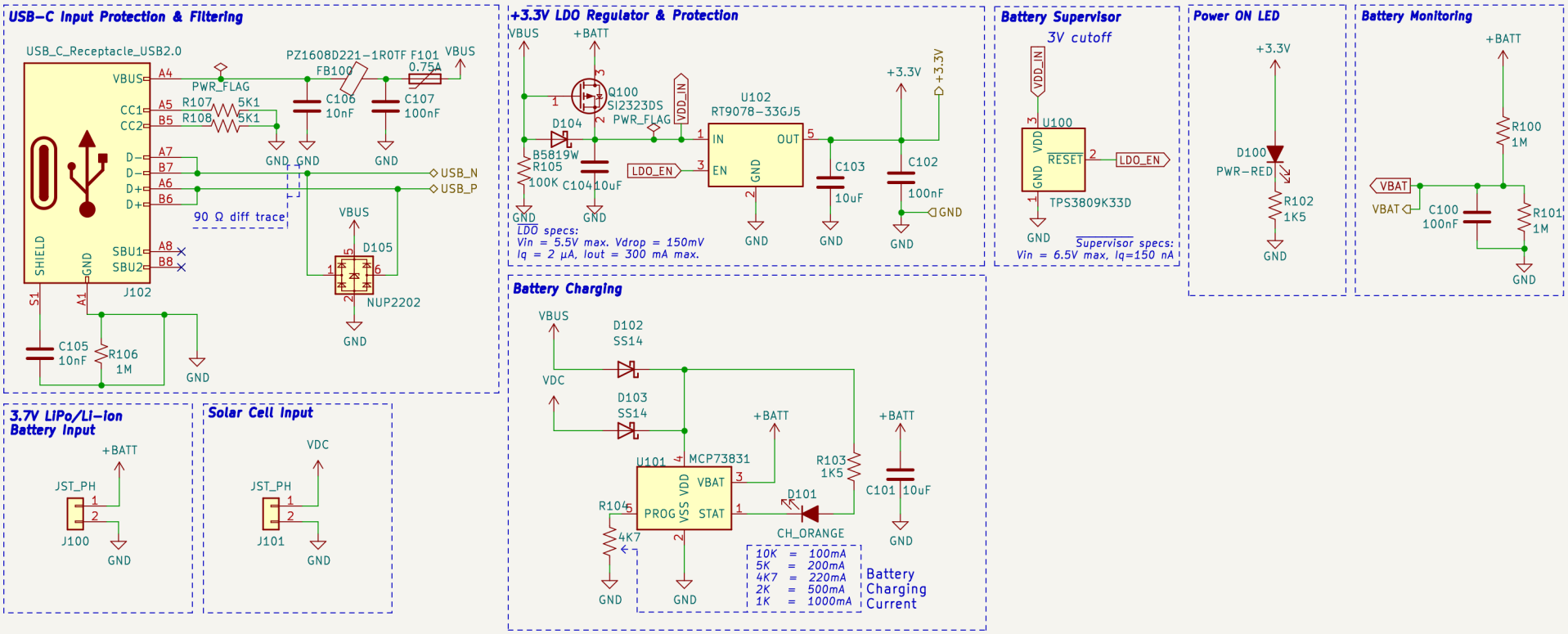

Sheet: /Solar Panel Charger/
File: solar_panel.kicad_sch

Title:

Size: A4	Date:	Rev:
KiCad E.D.A. kicad (6.0.0-0)		Id: 4/3