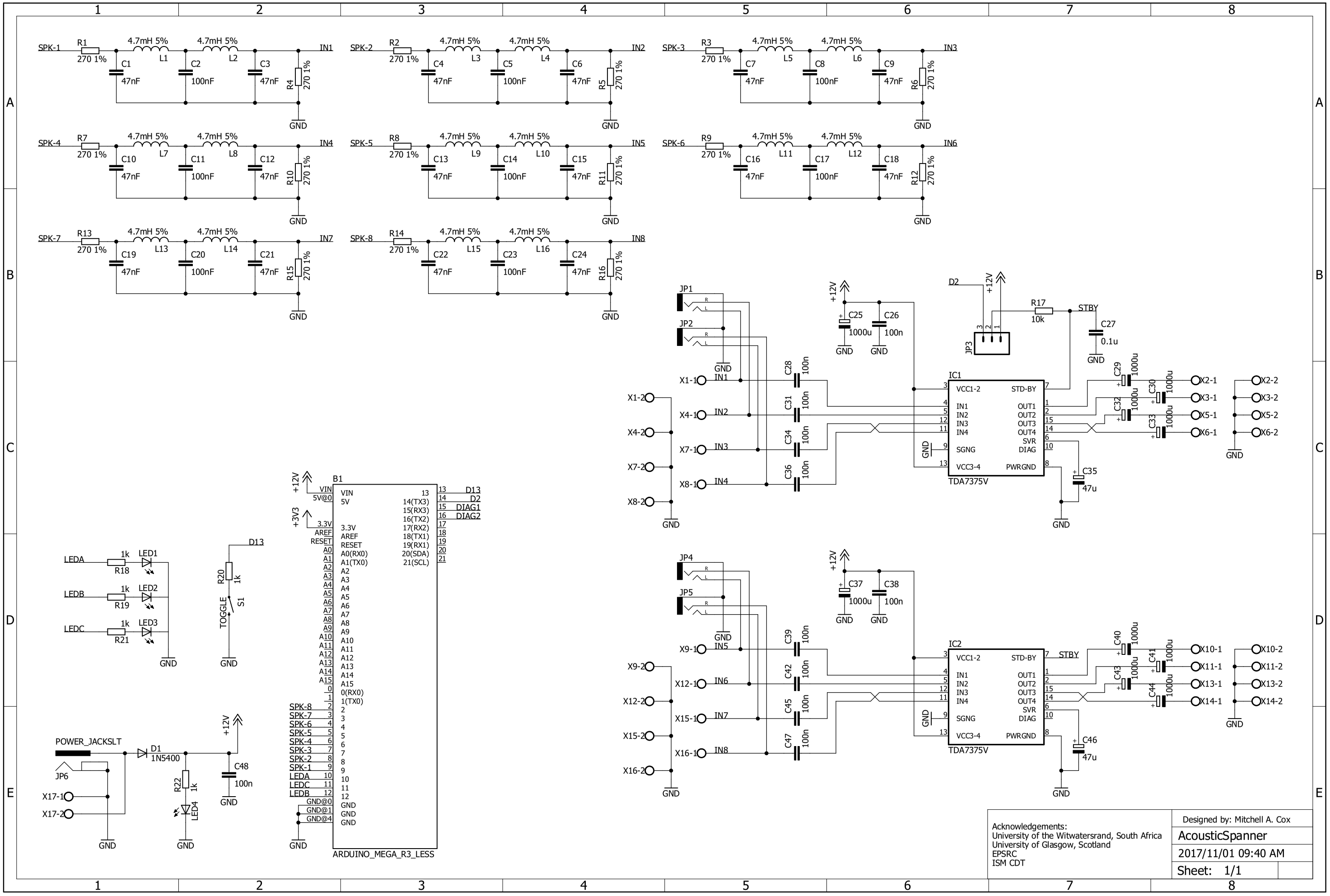
SPK-1 R1 270 1% 4.7mH 5% L1 4.7mH 5% L2 IN1
C1 47nF C2 100nF C3 47nF R4 270 1% GND
SPK-2 R2 270 1% 4.7mH 5% L3 4.7mH 5% L4 IN2
C4 47nF C5 100nF C6 47nF R5 270 1% GND
SPK-3 R3 270 1% 4.7mH 5% L5 4.7mH 5% L6 IN3
C7 47nF C8 100nF C9 47nF R6 270 1% GND
SPK-4 R7 270 1% 4.7mH 5% L7 4.7mH 5% L8 IN4
C10 47nF C11 100nF C12 47nF R10 270 1% GND
SPK-5 R8 270 1% 4.7mH 5% L9 4.7mH 5% L10 IN5
C13 47nF C14 100nF C15 47nF R11 270 1% GND
SPK-6 R9 270 1% 4.7mH 5% L11 4.7mH 5% L12 IN6
C16 47nF C17 100nF C18 47nF R12 270 1% GND
SPK-7 R13 270 1% 4.7mH 5% L13 4.7mH 5% L14 IN7
C19 47nF C20 100nF C21 47nF R15 270 1% GND
SPK-8 R14 270 1% 4.7mH 5% L15 4.7mH 5% L16 IN8
C22 47nF C23 100nF C24 47nF R16 270 1% GND
JP1
JP2
+12V C25 1000u C26 100n GND
D2 +12V R17 10k STBY C27 0.1u
JP3
X1-1 IN1 X1-2 X4-1 IN2 X4-2 X7-1 IN3 X7-2 X8-1 IN4 X8-2
C28 100n C31 100n C34 100n C36 100n
IC1 TDA7375V
VCC1-2 STD-BY IN1 IN2 IN3 IN4 OUT1 OUT2 OUT3 OUT4 SVR DIAG SGNG VCC3-4 PWRGND
C29 1000u C30 1000u C32 1000u C33 1000u
X2-1 X3-1 X5-1 X6-1 X2-2 X3-2 X5-2 X6-2
C35 47u
+12V
B1 ARDUINO_MEGA_R3_LESS
VIN 5V 3.3V AREF RESET A0(RX0) A1(TX0) A2 A3 A4 A5 A6 A7 A8 A9 A10 A11 A12 A13 A14 A15 0(RX0) 1(TX0) 2 3 4 5 6 7 8 9 10 11 12 GND GND GND
13 14(TX3) 15(RX3) 16(TX2) 17(RX2) 18(TX1) 19(RX1) 20(SDA) 21(SCL)
D13 D2 DIAG1 DIAG2
SPK-8 SPK-7 SPK-6 SPK-5 SPK-4 SPK-3 SPK-2 SPK-1 LEDA LEDC LEDB
GND@0 GND@1 GND@4
LEDA R18 1k LED1
LEDB R19 1k LED2
LEDC R21 1k LED3
D13 R20 1k TOGGLE S1
POWER_JACKSLT JP6 X17-1 X17-2
D1 1N5400 R22 1k LED4 C48 100n
JP4
JP5
+12V C37 1000u C38 100n
X9-1 IN5 X9-2 X12-1 IN6 X12-2 X15-1 IN7 X15-2 X16-1 IN8 X16-2
C39 100n C42 100n C45 100n C47 100n
IC2 TDA7375V
STBY
C40 1000u C41 1000u C43 1000u C44 1000u
X10-1 X11-1 X13-1 X14-1 X10-2 X11-2 X13-2 X14-2
C46 47u
Acknowledgements:
University of the Witwatersrand, South Africa
University of Glasgow, Scotland
EPSRC
ISM CDT
Designed by: Mitchell A. Cox
AcousticSpanner
2017/11/01 09:40 AM
Sheet: 1/1