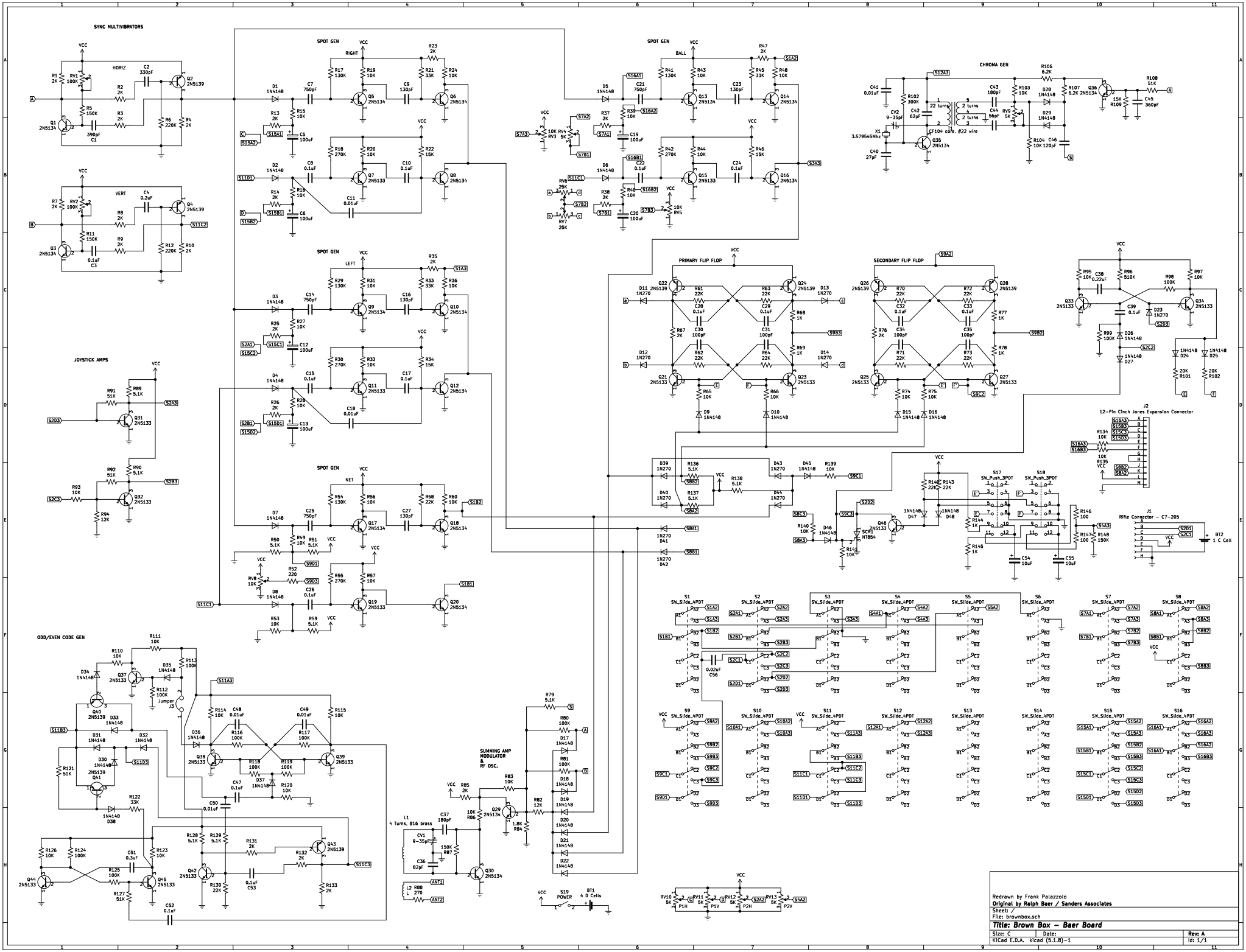

Redrawn by Frank Palazzolo
Original by Ralph Baer / Sanders Associates
Sheet: /
File: brownbox.sch

Title: Brown Box - Baer Board

Size: C	Date:	Rev: A
KiCad E.D.A. kicad (5.1.8)-1		Id: 1/1