Stochastic Planning: MDPs

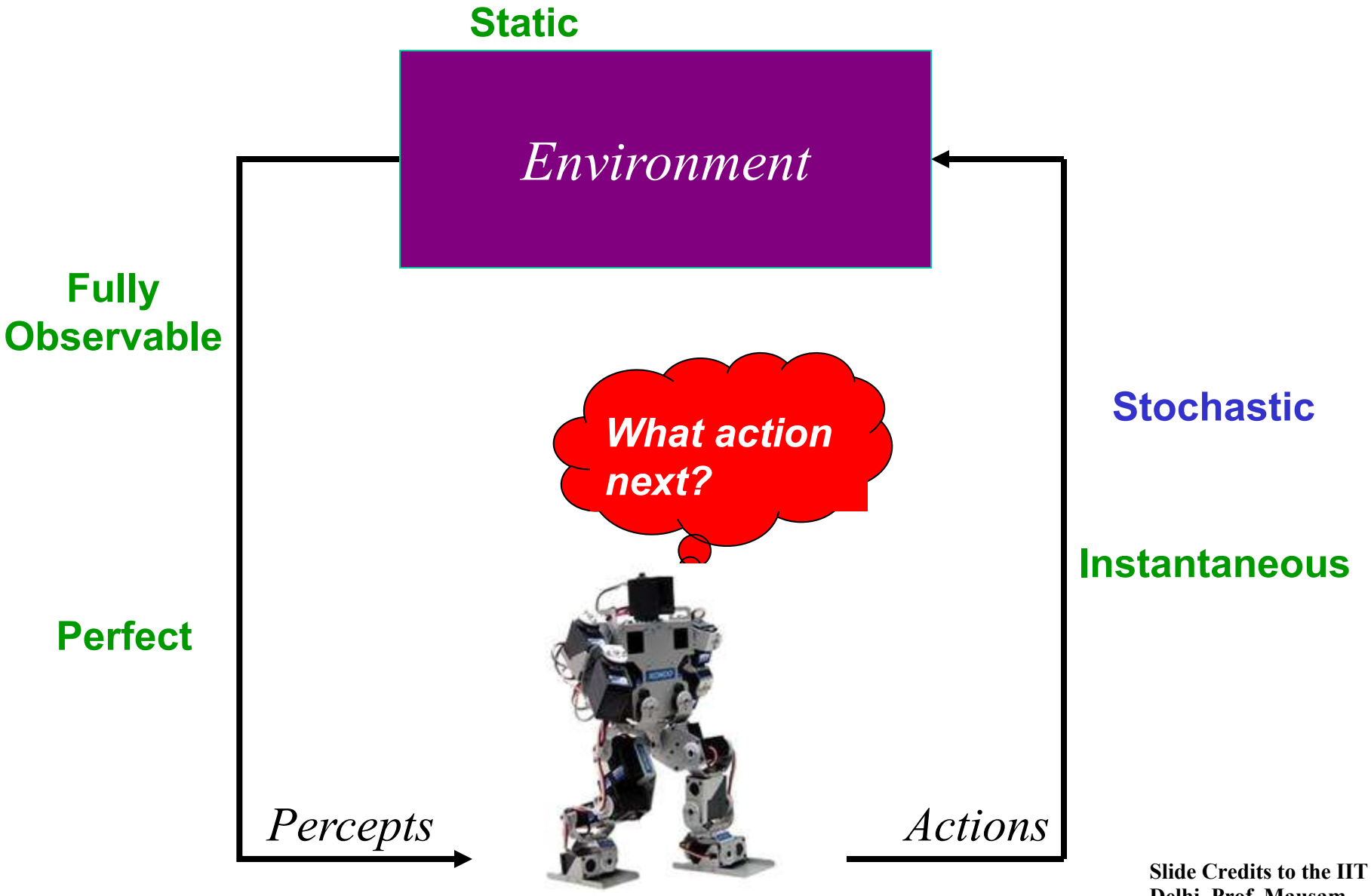

Slide Credits to the IIT Delhi, Prof. Mausam

MDP vs. Decision Theory

S : A set of states.

A : A set of actions.

$T(s, a, s')$: Transition model.

$C(s, a, s')$: Cost model.

G : set of goals.

s_0 : start state.

γ : discount factor.

$R(s, a, s')$: Reward model.

MDP specifically doesnot take into consideration of earlier state.

→ Future state depends only on the current state and the action taken.

→ Independent of all previous states and actions.

Objective of an MDP

- Find a policy π: $\mathcal{S} \rightarrow \mathcal{A}$
- which optimizes
  - minimizes (discounted or undiscount.) expected cost to reach a goal
  - maximizes (discounted or undiscount.) expected reward
  - maximizes (discounted or undiscount.) expected (reward-cost)
- given a _____ horizon
  - finite
  - infinite
  - indefinite
- assuming full observability

Role of Discount Factor (γ)

- It is helpful to keep the total reward/ total cost finite.
- It is useful for infinite horizon problems.

- Total reward: $r_1 + \gamma r_2 + \gamma^2 r_3 + \ldots$
- Total cost: $c_1 + \gamma c_2 + \gamma^2 c_3 + \ldots$

Brute force Algorithm

$V^{\pi^*}(s)$ – Optimal

- Go over all policies π
  - How many? $|A|^{|S|}$
- Evaluate each policy
  - $V^{\pi}(s) \leftarrow$ expected cost of reaching goal from s
- Choose the best
  - We know that best exists (SSP optimality principle)
  - $V^{\pi^*}(s) \leq V^{\pi}(s)$

min $C(s, \pi(s), \underline{s'})$.

Policy Evaluation

- Given a policy π: compute V^{π} { reward }.
  - V^{π}: cost of reaching goal while following π.

Given all the policies ($|a|^{|s|}$) → best policy.

Deterministic MDPs

- Policy Graph for π $\begin{cases} \pi(s_0) = a_0 \\ \pi(s_1) = a_1 \end{cases}$

$\pi(G) = 0.$

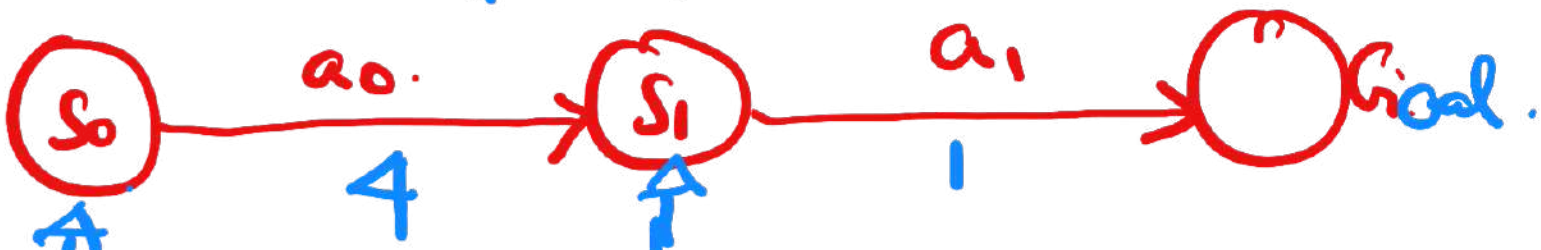

$V(\pi(s_1)) = 1$

$V(\pi(s_0)) = 1 + 4 = 5.$

$\pi(s): S \to a.$

Acyclic MDPs

- Policy Graph for π

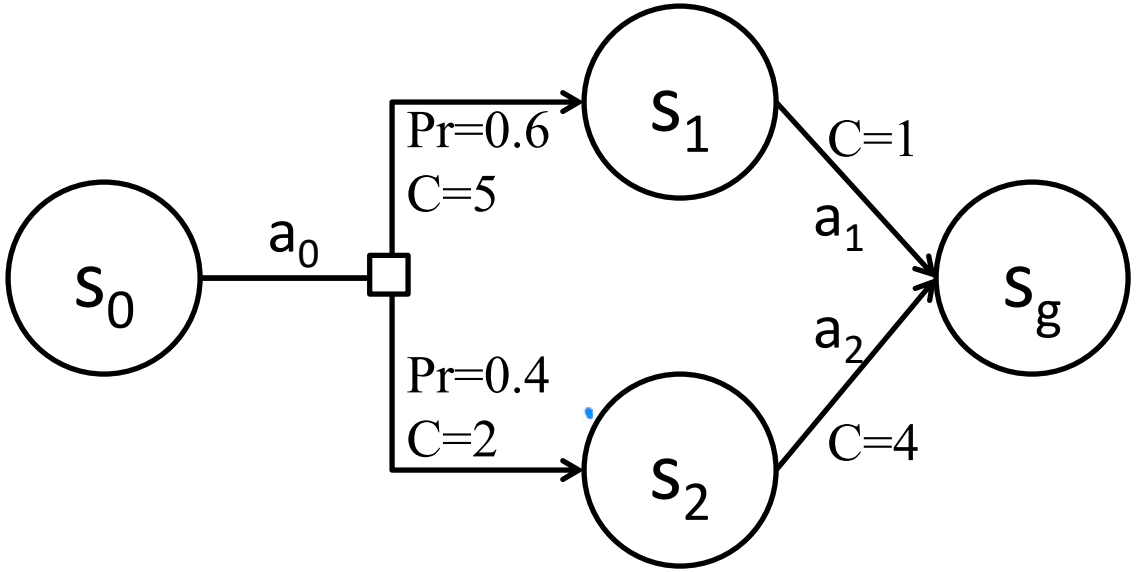

$V(\pi(s_2)) = 4.$

$V(\pi(s_1)) = 1$

Expected Value

$V(\pi(s_0)) = 0.6(5+1) + 0.4(2+4)$

General MDPs can be cyclic!

$V(\pi(s_0))$
$V(\pi(s_2))$

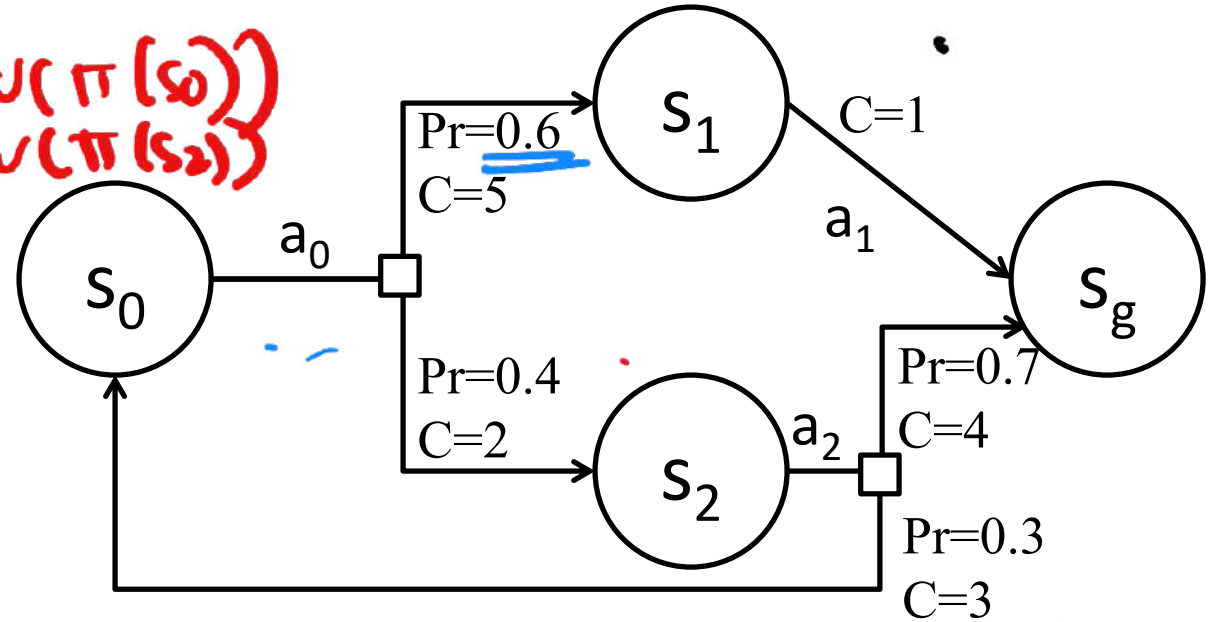

$V^\pi(s_0) = 0.4(2 + V^\pi(s_2)) + 0.6(5 + 1)$

- $V^\pi(s_1) = 1$
- $V^\pi(s_2) = ??$ (depends on $V^\pi(s_0)$)
- $V^\pi(s_0) = ??$ (depends on $V^\pi(s_2)$)

$V^\pi(s_2) = 0.3(V^\pi(s_0)) + 3.7 = 3.7 \mid 4.1 \mid 4.3 \mid 4.3$

$V^\pi(s_0) = 4.4 + 0.4(V^\pi(s_2)) = 4.88 \mid 5.1 \mid 5.3 \mid 5.3$

General SSPs can be cyclic!

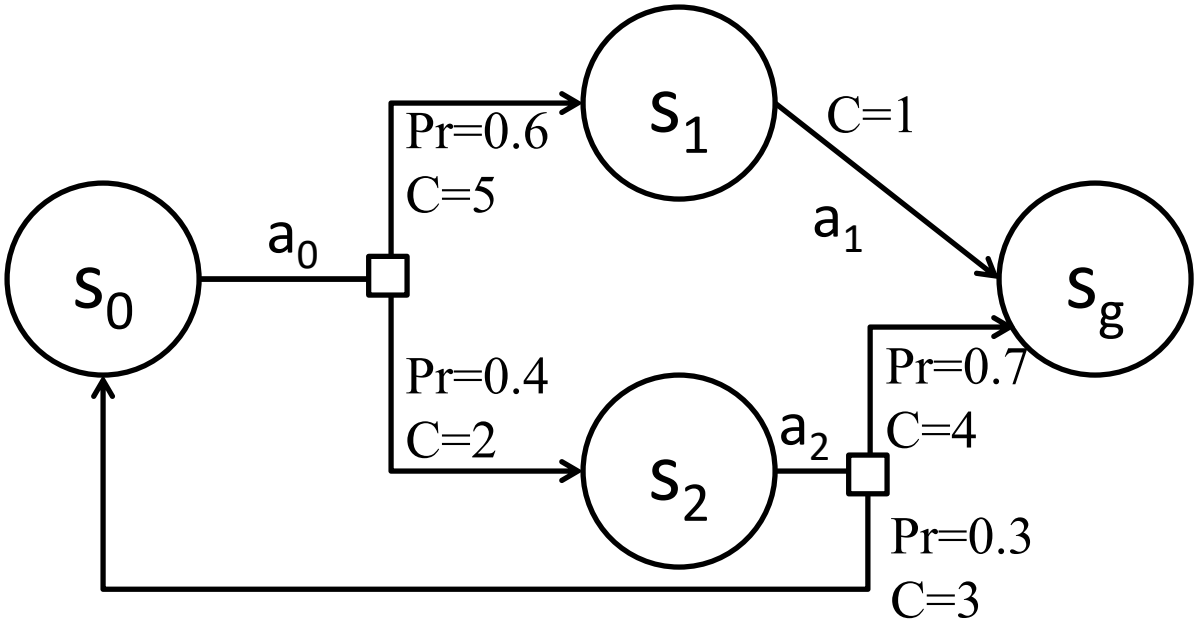

- $V^{\pi}(g) = 0$
- $V^{\pi}(s_1) = 1 + V^{\pi}(s_g) = 1$
- $V^{\pi}(s_2) = 0.7(4 + V^{\pi}$

Policy Evaluation (Approach 1)

- Solving the System of Linear Equations

$$V^\pi(s) = 0 \quad \text{if } s \in \mathcal{G}$$

$$V^\pi(s) = \sum_{s' \in S} T(s, \pi(s), s') \left[C(s, \pi(s), s') + V^\pi(s') \right]$$

Dynamic Program

- $|S|$ variables.
- $O(|S|^3)$ running time

Iterative Policy Evaluation

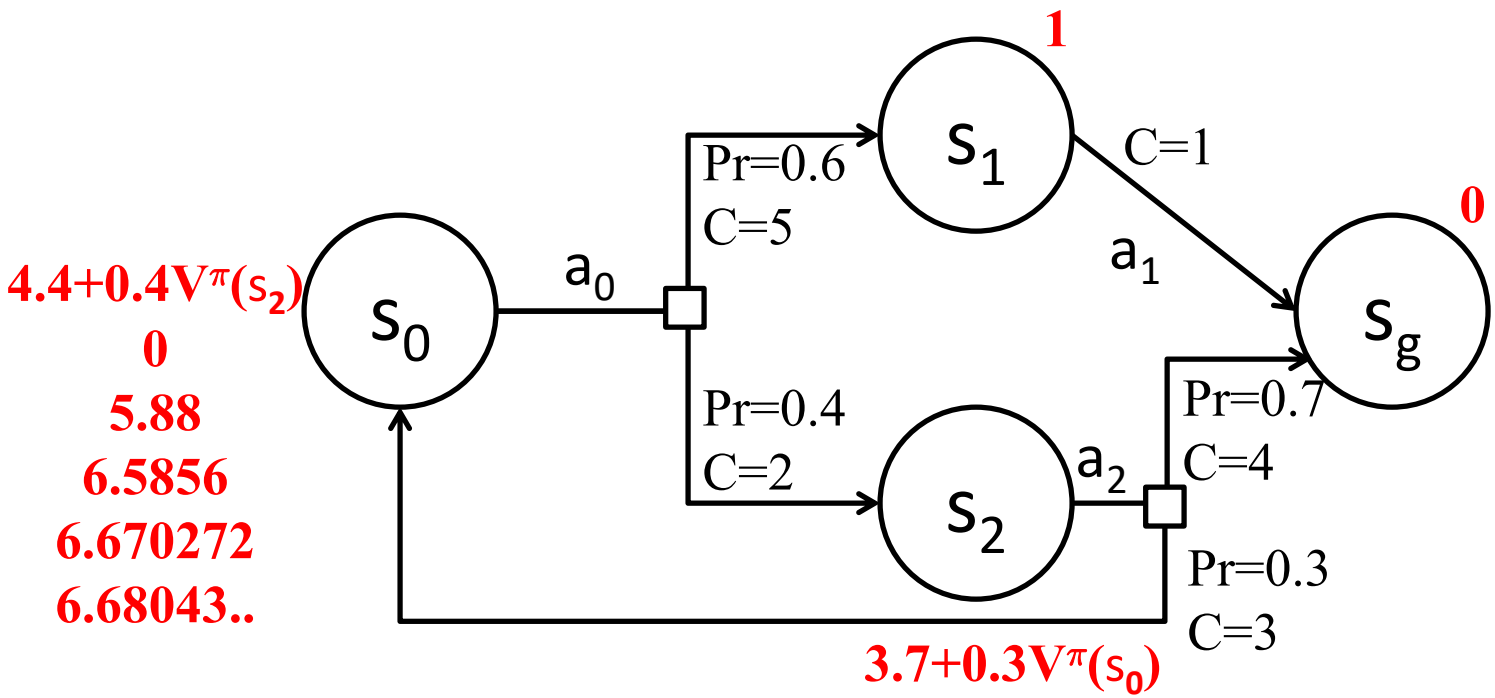

$4.4+0.4V^{\pi}(s_2)$
0
5.88
6.5856
6.670272
6.68043..

$3.7+0.3V^{\pi}(s_0)$
3.7
5.464
5.67568
5.7010816
5.704129…

Condition :-

residual $V^{\pi}(s) < \varepsilon$

$V_{n-1}^{\pi}(s_2)$
$V_n^{\pi}(s_2)$

Policy Evaluation (Approach 2)

$$V^\pi(s) = \sum_{s' \in \mathcal{S}} \mathcal{T}(s, \pi(s), s') \left[\mathcal{C}(s, \pi(s), s') + V^\pi(s')\right]$$

iterative refinement

$$V_n^\pi(s) \leftarrow \sum_{s' \in \mathcal{S}} \mathcal{T}(s, \pi(s), s') \left[\mathcal{C}(s, \pi(s), s') + V_{n-1}^\pi(s')\right]$$

Iterative Policy Evaluation

```
//Assumption: π is proper
initialize V_0^π arbitrarily for each state
  n ← 0
  repeat
      n ← n+1
  for each s ∈ S do
    Compute V_n^π(s) = Σ_{s'∈S} T(s, π(s), s') [c(s, π(s), s') + V_{n-1}^π(s')]
    residual_s = | V_n^π(s) - V_{n-1}^π(s) |
  end
Until
      max_{s∈S} residual(s) < ε
```

iteration n

ε-consistency

termination condition

Convergence & Optimality

For a proper policy π

Iterative policy evaluation

converges to the true value of the policy, i.e.

$\lim_{n\to\infty} V_n^\pi = V^\pi$ → Optimal Solution

irrespective of the initialization V_0

Policy Evaluation → Value Iteration (Bellman Equations for MDP_1)

- $<\mathcal{S}, \mathcal{A}, \mathcal{T}, \mathcal{C}, \mathcal{G}, s_0>$
- Define V*(s) {optimal cost} as the minimum expected cost to reach a goal from this state.
- V* should satisfy the following equation:

$$V^*(s) = 0 \quad \text{if } s \in \mathcal{G}$$

$$= \quad$$

Q*(s,a)

V*(s) = $\min_a$ Q*(s,a)