INVENTION DISCLOSURE FORM

M&P
IP PROTECTORS
TRADEMARK • PATENT • DESIGN • COPYRIGHT

This form should be used by Researchers/Inventors of the ***IIITDM,*** and completed with a view to securing and obtaining patent protection for the same. This form is essentially designed to help the Researchers/Inventors to organize their thoughts about their invention in a structured manner. The Inventors are encouraged to explain their invention in an extremely simplistic manner and in complete terms so as to allow a person not familiar with the relevant technology to easily understand the disclosed invention. The disclosed invention would enable IP Attorneys in assessing its patentability and drafting a patent application on the same.

GUIDELINES TO FILL THE INVENTION DISCLOSURE FORM

This invention disclosure form contains information that is proprietary and highly confidential. Unauthorized possession, viewing, or distribution of the form is strictly prohibited.

Following are some guidelines that would help you in disclosing your invention in this Invention Disclosure Form (IDF):

- Please consider Attorneys as people who do not have any understanding of the technology in which your invention has been made, while disclosing the invention. Kindly disclose your invention to the fullest possible.
- Please do not limit yourself only to the specific method/process, formulation/ composition, product/device or prototype that you have invented, while disclosing your invention but also consider identifying all the possible modifications/alternatives of your invention. Kindly explain all the identified modifications/alternatives in detail as well.

Note*:*

• *Please remember your competitors could easily design around your invention and come up with alternatives/modification, which when not properly disclosed in the IDF may provide your competitors with competitive advantages over your invention.*

• *The best way you could think of the alternatives/modifications is to consider yourself as your own competitor!!*

- Inventors are encouraged to use ordinary and known technical terms to describe their invention. In case, some unusual terms are used then their appropriate definition must be provided.
- The invention must be explained with reference to the properly labeled drawings and flowcharts
- The IDF is divided into following sections: **Sections Purpose**

Sections	Purpose
Section- I	For disclosing details on the Applicant/Assignee and Inventor
Section-II	For disclosing details on the background of your invention
Section-III	For disclosing details of your invention

SECTION-I: DETAILS OF THE ASSIGNEE/APPLICANT AND INVENTORS

Please provide below complete details of the Assignee/Applicant to which the invention is assigned by the inventors.

Name of the Assignee	IIITDM Kancheepuram
Registered address of the Assignee	Melakottaiyur, off Kelambakkam - Vandalur Road, Kandigai, Nellikuppam, Tamil Nadu 600127
Name of the Department and Campus from where the invention is originating	SIDI, IIITDM Kancheepuram
Name of the Head of Department (HOD)	Dr. Jayachandra Bingi
Contact details of HOD	044-27476381
Email ID of HOD	hos-sidi@iiitdm

Please provide details of all the inventors who have contributed to the invention. Feel free to add details of any additional inventors if required.

Name of the first inventor (surname followed by first and middle names)	Dr. Y. Ashok Kumar Reddy
Nationality	Indian
Address for communication	**219-H, Laboratory Complex (North-East)** Indian Institute of Information Technology Design and Manufacturing (IIITDM), Kancheepuram, Chennai – 600127, Tamil Nadu
Permanent address	Indian Institute of Information Technology Design and Manufacturing (IIITDM), Kancheepuram, Chennai – 600127, Tamil Nadu
Contact details	+91-44 2747 6369
Email ID	akreddy@iiitdm.ac.in

Name of the second inventor (surname followed by first and middle names)	Dubey Sharad Kumar
Nationality	Indian
Address for communication	Indian Institute of Information Technology Design and Manufacturing (IIITDM), Kancheepuram , Chennai – 600127 , Tamil Nadu
Permanent address	Payagpur, Rajatalab, Varanasi, Uttar Pradesh, 221311
Contact details	8960064987
Email ID	sharaddubey2023@gmail.com

Name of the third inventor (surname followed by first and middle names)	Patel Akash
Nationality	Indian
Address for communication	Indian Institute of Information Technology Design and

	Manufacturing (IIITDM), Kancheepuram, Chennai – 600127, Tamil Nadu
Permanent address	Bhatthi , Lohata, Varanasi, Uttar Pradesh, 221107
Contact details	9140813627
Email ID	akash.patel9690@gmail.com

Name of the fourth inventor (surname followed by first and middle names)	Chandra Gyan
Nationality	Indian
Address for communication	Indian Institute of Information Technology Design and Manufacturing (IIITDM), Kancheepuram, Chennai – 600127, Tamil Nadu
Permanent address	Village Ramdeo, Kharika, Post – Mahesra , Block – Daru, District – Hazaribagh, Jharkhand - 825313
Contact details	9955187719
Email ID	chandragyan2003@gmail.com

Name of the fifth inventor (surname followed by first and middle names)	Singh Vishal
Nationality	Indian
Address for communication	Indian Institute of Information Technology Design and Manufacturing (IIITDM), Kancheepuram, Chennai – 600127, Tamil Nadu
Permanent address	Shastri Nagar near central school Bharatpur Rajasthan - 321001
Contact details	8000146225
Email ID	Vishalsingh80014@gmail.com

Name of the sixth inventor (surname followed by first and middle names)	Kumar Sarvan
Nationality	Indian
Address for communication	Indian Institute of Information Technology Design and Manufacturing (IIITDM), Kancheepuram, Chennai – 600127, Tamil Nadu
Permanent address	H-No 45 A, B – Block, Nandgram, Ghaziabad, UP, 201003
Contact details	7835840652
Email ID	sk.sarvan1111@gmail.com

SECTION- II: BACKGROUND INFORMATION OF THE INVENTION

1. Please write a brief background of the technology on which the invention has been made.

Field of the Invention

The present invention relates generally to the field of material analysis and classification. More specifically, it relates to a portable apparatus and method for differentiating and identifying textile materials—such as cotton, wool, nylon, and polyester—without reliance on physical labels, utilizing a combination of physical sensing techniques and machine learning.

Description of the Related Art (State of the Art) and Problem Statement The accurate identification of textile materials in garments and fabrics presents a persistent challenge in both consumer applications and industrial settings, particularly when manufacturer labels are missing, faded, or deliberately removed. Because many distinct synthetic and natural fabrics appear visually similar or identical, reliable material differentiation through basic human observation is inherently difficult. At the consumer level, this lack of clear and identifiable information negatively impacts decisions regarding proper garment care, ascertaining value of cloth, durability assessments, sustainable usage, and disposal.

The problem is significantly magnified within the textile recycling sector, where large volumes of discarded garments continuously enter recycling streams devoid of reliable material labelling. Because distinct textile compositions require highly specific recycling processes, the accurate identification of the fabric type is a critical prerequisite for effective and sustainable recycling operations.

In the current state of the art, textile sorting and identification are predominantly performed using two extreme methodologies. The first methodology is manual sorting conducted by trained personnel; however, this approach is highly labour-intensive, inefficient, and highly susceptible to human error. The second methodology relies on the use of highly sophisticated and expensive industrial sorting equipment, typically utilizing Near-Infrared (NIR) technology.

Consequently, there remains a significant unmet need in the prior art for an intermediate, middle ground solution. There is currently a lack of systems that are both highly accurate and cost-effective, creating a demand for a low-cost, portable textile identification system that can be deployed for quick fabric analysis in consumer environments and recycling facilities alike.

2. Please write a brief background of the direct area/areas of application and use for which the invention has been made."

The present invention has direct applicability in both industrial and consumer sectors where rapid, low-cost, and non-destructive identification of textile materials is required. By functioning as a compact, easily deployable smartphone attachment, the invention provides significant utility in the following primary areas:

a. Industrial Textile Recycling and Waste Management: A primary application area for the invention is the textile recycling sector. Currently, large volumes of discarded garments continuously enter recycling streams lacking reliable labelling. Because different textile compositions require distinct chemical and mechanical recycling processes, the accurate identification and sorting of fabric types is a critical industry requirement. The present invention serves as a portable diagnostic tool that can be utilized within recycling facilities to assist personnel in quickly differentiating common fabrics, such as cotton, wool, nylon, and polyester.

This provides a practical, highly mobile solution that bridges the gap between inaccurate manual human sorting and expensive, non-portable industrial sorting equipment.

b. Consumer-Level Fabric Analysis and Garment Care: Another direct area of application is consumer-level fabric analysis. Everyday consumers routinely face difficulties identifying fabric types when clothing labels are deliberately removed, faded over time, or missing entirely. The present invention empowers users to accurately determine the dominant material of a garment. This utility directly aids consumers in making informed, day-to-day decisions in ascertaining correct value of cloth, proper garment washing and care, evaluating the durability of textiles, and ensuring sustainable purchasing and disposal practices.

c. Supply Chain and Retail Verification: The device is generally intended for any situation requiring quick fabric identification without relying on physical tags. As such, its utility extends to secondary markets, thrift stores, and retail environments where operators or buyers need to quickly verify the material composition of unlabelled textile goods to determine value, authenticity, or proper categorization.

3. What are the existing problems of the technology that your invention proposes to solve? Have any previous attempts been made to solve these problems? Yes/No

If YES, how and by what means and what are their drawbacks/deficiencies?

a. Existing Problems of the Technology: The primary problem the present invention proposes to solve is the lack of an accurate, portable, and cost-effective system for identifying and differentiating textile materials (such as cotton, wool, nylon, and polyester) when physical labels are absent, faded, or removed. Because many natural and synthetic fabrics share visually identical characteristics, unassisted identification is unreliable. This creates significant bottlenecks in the textile recycling sector, where efficient chemical and mechanical processing requires precise material sorting. Furthermore, everyday consumers lack accessible tools to determine fabric composition for proper garment care and disposal. A significant technological gap exists for a "middle-ground" solution that bridges the divide between inaccurate human sorting and prohibitively expensive industrial machinery.

b. Have any previous attempts been made to solve these problems? YES, previous attempts have been made in the industry to solve the problem of textile sorting and identification.

Previous Attempts: Means, Drawbacks, and Deficiencies Existing solutions and prior art methodologies generally fall into few categories, all of these possess several drawbacks that the present invention overcomes:

• **Spectroscopy based industrial equipment**:

Industrial level equipment uses near infrared and Fourier transform infrared technology to identify the spectral signature of fabric. The identification is very accurate but comes with a very high cost and the device are generally designed for Industrial level conveyor systems and are not modular or portable.

• **Finger-shaped/touch-based devices to classify fabric through touch:**

Very early-stage research devices are present that can classify clothes without computer vision or imaging, only through touch, but these devices are under development and are very high end in technology and cost.

• **Product based on NIR and smartphone imaging**:

Products have been showcased that use smartphone imaging plus near infrared and artificial intelligence classification to detect fabrics very accurately. Portable but high in cost.

c. How the Present Invention Resolves These Deficiencies: The present invention directly addresses the severe deficiencies of the prior art by providing a highly accurate, low-cost, and portable middle-ground solution. Unlike above approaches, the invention utilizes a portable smartphone attachment that pairs machine learning with an optimized triboelectric sensing module (Electrostatic charge sensing).

To overcome the challenges of generating consistent electrostatic data in a portable form factor, the invention departs from simple or inefficient mechanical interactions and employs a novel Scotch yoke mechanism utilizing a flat PVC block. This design converts rotational motion into smooth, linear reciprocating motion, maximizing the flat surface contact area during every stroke and ensuring a highly consistent cycle of contact and separation. Furthermore, the system is driven by a high-speed DC motor that generates a high frequency of rubbing events per second. This reliable, high-frequency physical interaction produces robust and readable static charge datasets, enabling the integrated machine learning model integrated with image classification of macro images of the fabric sample to accurately and instantly classify the fabric type on a mobile device.

4. How your invention proposes to overcome the above noted problems?

a. Motivation: The Reason for the Invention The primary motivation behind this invention is to do near accurate textile identification by breaking down the severe cost and accessibility barriers currently plaguing the industry. As noted in the prior art, highly accurate methods exist such as industrial NIR/FTIR spectroscopy, portable NIR-imaging devices, and advanced touch-based sensory equipment—but they are universally hindered by prohibitively high technological and manufacturing costs. The motivation of this invention is to provide a true "middle-ground" solution: a portable, highly accurate device that replaces expensive spectroscopic and advanced tactile hardware with a low-cost, multi-modal sensing approach, making reliable fabric analysis accessible to everyday consumers and scalable for recycling facilities.

b. How the Invention Proposes to Overcome the Above-Noted Problems To overcome the limitations of high cost, lack of portability, and early-stage technological complexities found in existing prior art, the present invention proposes a low-cost, multi-modal smartphone attachment. The invention overcomes the established problems through the following integrated technical solutions:

- **Overcoming the Cost and Portability Barriers:** Unlike heavy industrial spectroscopy equipment designed for conveyor belts, or expensive portable NIR devices, the present invention leverages the existing computational power and camera hardware of a standard smartphone. By utilizing a compact physical attachment rather than standalone computing hardware or costly infrared sensors, the invention drastically reduces manufacturing costs while maintaining complete portability.
- **Overcoming Sensor Limitations via Multi-Modal Data Fusion:** To achieve high accuracy without relying on expensive near-infrared (NIR) sensors or high-end robotic touch sensors, the invention captures two distinct, low-cost physical data streams simultaneously:

    - **Optical Macro-Image Classification:** The device utilizes a smartphone-integrated macro lens to capture high-resolution images of the fabric's microscopic weave and structural texture.
    - **Triboelectric (Static Charge) Sensing:** Instead of advanced spectral imaging, the device actively generates and measures the unique electrostatic voltage signals produced when the target fabric interacts with a reference material.
- **Overcoming Mechanical Data:** Generating consistent, readable electrostatic data in a low-cost portable device has historically been a challenge. The invention overcomes this by replacing simple or inefficient mechanical interactions with an optimized electromechanical setup:
    - **Scotch Yoke Mechanism with Flat PVC Block:** The system utilizes a Scotch yoke mechanism to convert rotational motion into smooth, linear reciprocating motion, driving a flat PVC block against the target fabric. The flat PVC surface maximizes the contact area during every stroke, while the reciprocating motion ensures a highly consistent cycle of physical contact and separation—the critical requirement for reliable triboelectric charge generation.
    - **High-Speed DC Motor:** To ensure a robust data stream, the Scotch yoke is driven by a high-speed DC motor. This generates a high frequency of rubbing events per second, yielding a continuous, distinct static electricity dataset for any given fabric.
- **Integrated Machine Learning for Instant Classification:** To completely eliminate human error and the need for complex laboratory analysis, the invention utilizes an integrated machine learning model. By simultaneously fusing the high-frequency triboelectric datasets with the image classification of the fabric's macro images, the model accurately and instantly classifies the dominant fabric type (e.g., cotton, wool, nylon, polyester), outputting the result directly to the user's mobile device.

5. Have you conducted any prior art search at your end on your invention? If YES, please provide us details of the prior art patents, published literature, catalogues, articles, etc. Please list down the patent or non- patent literature if you are aware of filed or published by academic and non-academic groups working in the same or similar areas of application of your proposed invention.

YES. A preliminary prior art search has been conducted to evaluate the novelty and patentability of the proposed invention. The search encompassed both patent databases and non-patent literature (NPL), including academic journals, research archives, and published literature by academic and non-academic groups working in the fields of textile classification, computer vision, and electrostatic/triboelectric sensing.

Below are the details of the relevant prior art, categorized into Non-Patent Literature (NPL) and Patent Literature/General Technological Domains.

a. Non-Patent Literature (NPL) / Academic Publications

The following published literature and academic articles explore the foundational technologies related to our areas of application (optical fabric classification and electrostatic charge measurement). These papers highlight the ongoing academic effort to classify textiles but notably lack the specific multi-modal, portable electro-mechanical (Scotch yoke) integration proposed in our invention:

- **Ohi, A. Q., Mridha, M. F., Hamid, M. A., Monowar, M. M., & Kateb, F. A. (2021).** *"FabricNet: A Fiber Recognition Architecture Using Ensemble ConvNets."* arXiv.
    - *Relevance:* This paper details early academic attempts to use convolutional neural networks (CNNs) and computer vision for fabric recognition. It serves as prior art for the image-classification aspect of our invention but relies solely on visual data without secondary physical sensory input.
- **Ameer A. K., Samy A. M., Bakry M. (2020).** *"Measurements of Electric Static Charge Generated From Sliding of Cotton Against Clothes Textile."* * *Relevance:* This literature establishes the scientific basis for measuring static charge generated by fabric friction (triboelectric effect). While it explores the physics of textile electrostatics, it does not propose a portable, motorized electromechanical diagnostic device or machine learning integration.
- **Houck, M. M. (2010).** *"Introduction to textile fiber identification."* Australian Journal of Forensic Sciences, 42(2), 153-154.
    - *Relevance:* This serves as foundational literature regarding the traditional, laboratory-based methods of textile fiber identification, highlighting the manual and microscopic baseline that our automated invention seeks to replace.

b. Patent Literature and Published Technological Domains

While specific patent numbers vary by jurisdiction, our search into patent databases (such as WIPO, USPTO, and Google Patents) reveals that existing prior art generally falls into the following patented domains, none of which fully anticipate our invention:

- **Industrial Near-Infrared (NIR) Sorting Patents:** There are numerous patents filed by large industrial manufacturing companies for textile sorting on conveyor belts utilizing NIR spectroscopy and Fourier transform infrared technology.
    - *Differentiation:* These patents are strictly limited to large-scale, stationary industrial machinery and lack the low-cost, portable smartphone-attachment architecture of our invention.
- **Smartphone-Based Optical Defect and Texture Detectors:** Several recent patent applications and published articles detail systems that use smartphone cameras and Deep Learning (like YOLOv8 or ResNet architectures) to detect fabric *defects* or recognize weaving patterns.
    - *Differentiation:* These prior art applications rely exclusively on visual macro-imaging. They fail to solve the problem of visually identical synthetic blends because they lack our multi-modal approach (the integration of the motorized triboelectric sensor).
- **Early-Stage Tactile and Robotic Fabric Sensors:** There are emerging patents related to highly advanced, finger-shaped robotic sensors that classify fabrics through touch and electrical capacitance.
    - *Differentiation:* These devices are heavily experimental, highly complex, and expensive. They do not utilize our proposed low-cost Scotch yoke mechanism with a flat PVC block to generate high-frequency triboelectric data.

Conclusion of Search: The prior art search confirms that while individual elements of textile classification exist (e.g., machine learning image analysis, industrial NIR, and static charge studies), no prior art discloses a portable smartphone attachment that fuses macro-optical image classification with an active triboelectric sensing module driven by a high-speed DC motor and Scotch yoke mechanism. Therefore, the proposed invention remains novel and highly patentable.

6. Who all could be the major research groups/competitors with IPR activities in India and abroad working specifically in the area of application of your invention? Please suggest some names. If any.

a. Global Competitors & Startups (Industry / Commercial)

These companies hold significant patents and trade secrets related to portable textile identification, AI-assisted sorting, and spectroscopic fabric analysis:

- **Matoha (United Kingdom):** A highly relevant direct competitor. Matoha is an AI textile sorting tech startup that develops manually operated, portable handheld devices and desktop scanners. They use infrared technology combined with AI/machine learning to identify the compositional makeup of textiles in under a second. They hold active IPR in portable fabric AI scanning.
- **SOEX (Germany):** A pioneer in textile recycling, they hold extensive proprietary algorithms and patents for automated sorting. They use a combination of NIR (Near-Infrared), RGB sensors, and machine learning to distinguish between 90 different natural and synthetic materials with 95% accuracy.
- **trinamiX (Germany - a BASF subsidiary):** They have developed mobile, handheld NIR spectroscopy solutions integrated with smartphone apps to identify textile compositions (like distinguishing cotton, wool, and synthetic blends) on the go. They hold significant patents in mobile spectroscopy.
- **Trosort:** A company providing AI-automated textile sorting machines utilizing NIR and 360-degree visual AI scanning to determine material composition and garment attributes.
- **NewRetex (Denmark) & Siptex (Sweden):** Both are major players in the European circular economy, holding patents and advanced technology in large-scale AI and near-infrared (NIR)/visual spectroscopy (VIS) robotic fabric sorting.

b. Global Academic & Research Groups (Triboelectric & Smart Textiles)

Since your invention leverages the **triboelectric effect (static charge)** combined with machine learning, the following groups are the foremost patent filers and publishers in this specific niche:

- **Prof. Zhong Lin Wang's Research Group (Georgia Institute of Technology, USA / CAS Center for Excellence in Nanoscience, China):** Prof. Z.L. Wang is the original inventor of the Triboelectric Nanogenerator (TENG). His research group holds hundreds of patents globally. While initially focused on energy harvesting, they actively patent machine learning-assisted TENGs used for smart textiles, tactile sensors, and material interaction identification.
- **Xi'an Jiaotong University (China) - Prof. Feng Xu's Group:** Actively researching and filing patents for machine learning-enabled triboelectric textile systems and flexible wearable sensors.

- **Jinan University & Henan University (China):** Major publishers and patent filers in machine learning-assisted triboelectric technology for analyzing fabric interactions and intelligent sports monitoring.

c. Indian Research Institutes & Competitors (Academic & Industrial)

In India, textile research is heavily centralized within government-backed research associations and premier engineering institutes. They actively file patents for textile testing apparatuses:

- **SITRA (South India Textile Research Association, Coimbatore):** A massive hub for textile R&D in India. SITRA has filed over 50+ patents regarding textile testing machinery, quality evaluation, and fabric chemistry. They are highly active in the IPR space for mechanical and electronic testing of fabrics.
- **NITRA (Northern India Textile Research Association, Ghaziabad):** Highly active in patenting physical textile testing devices. They hold granted patents for devices such as "Fabric Smoothness Testers," "Friction Testers," and "Apparatus to determine dust resistance characteristics of sheeting Material." Their focus on physical fabric interaction testing makes them a key entity in this space.
- **Indian Institutes of Technology (Specifically IIT Delhi):** The *Department of Textile and Fibre Engineering* at IIT Delhi is a premier research group in India. They frequently file patents on smart textiles, electro-spinning, and fabric testing methodologies.
- **IIT Bombay & IISc Bangalore (Nano-science and IoT labs):** Groups here are actively working on flexible electronics, triboelectric nanogenerators, and AI/ML applications, often overlapping with smart textile classification and sensing.

SECTION- III: DETAILS OF THE INVENTION

1. Please provide a short title of the invention in not more than 15 words. The title should be clear and succinct.

Identification attachment device for textile differentiation

2. Does your invention relate to an Apparatus/Device/System; Method/Process; Formulation/Composition; or a combination of the above? Please specify.

The present invention relates to a smartphone attachment, along with an associated method of textile identification, combining mechanical, electrical, and machine learning subsystems.

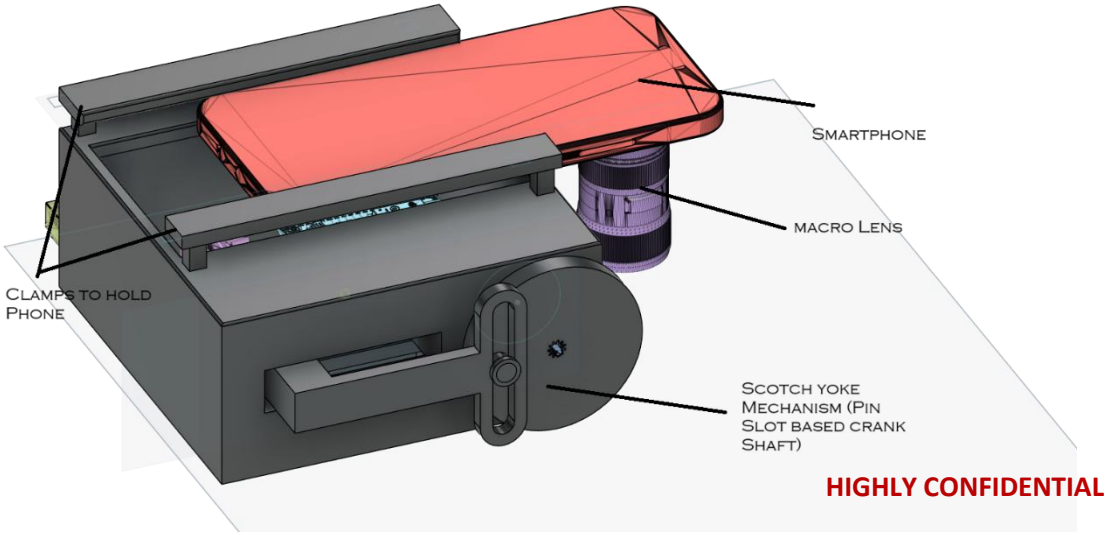

HIGHLY CONFIDENTIAL

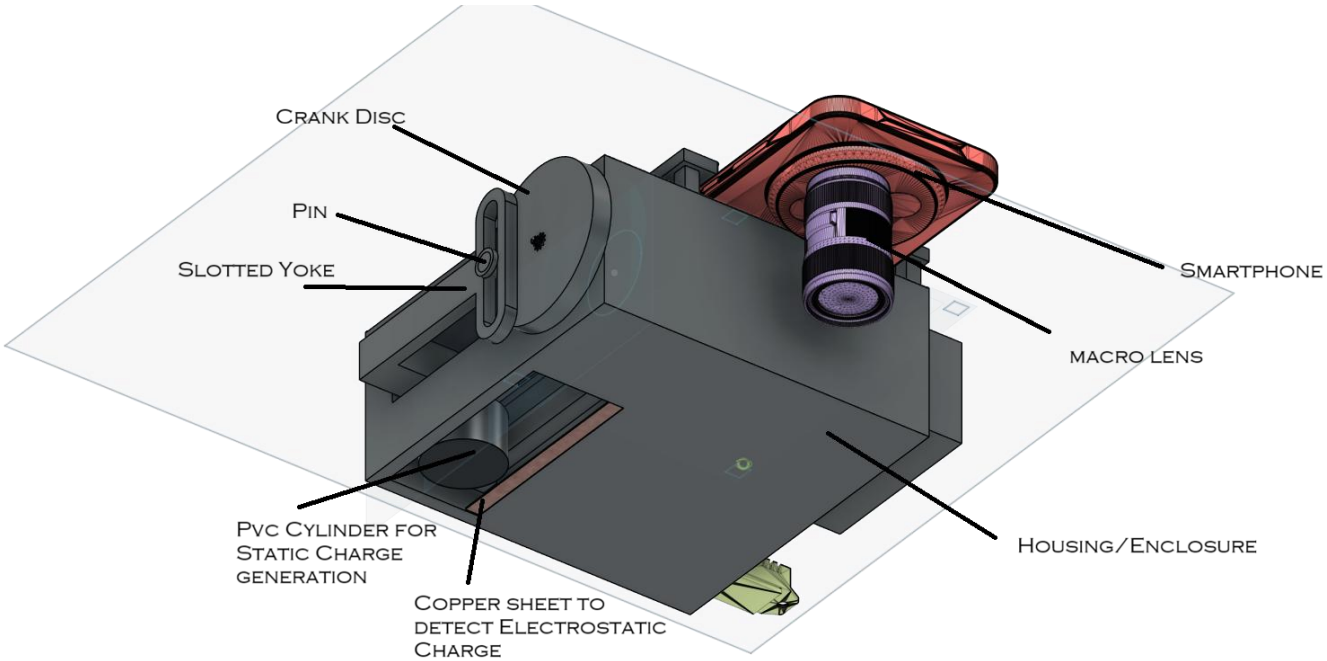

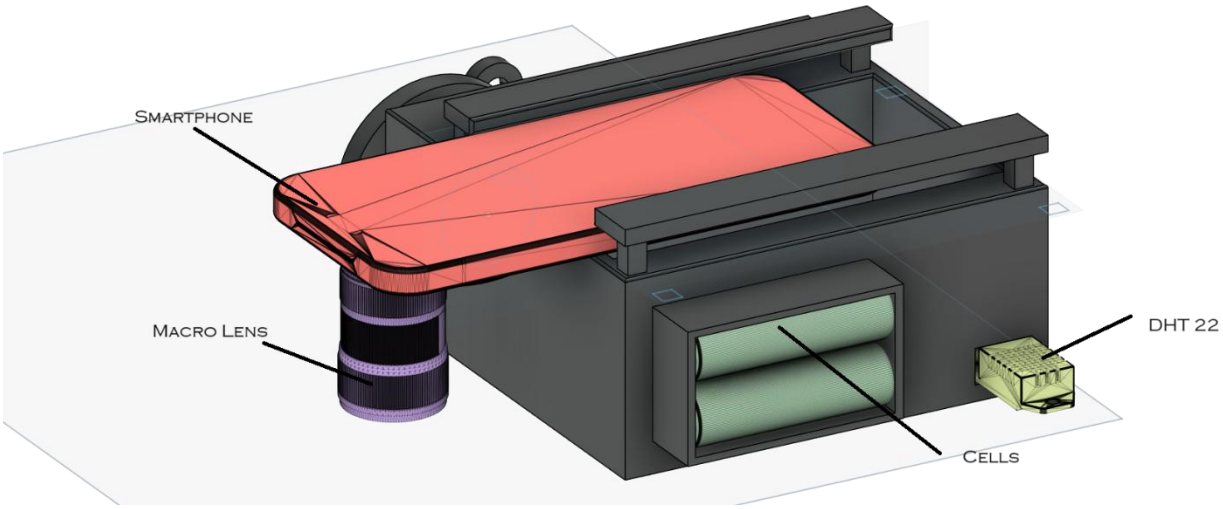

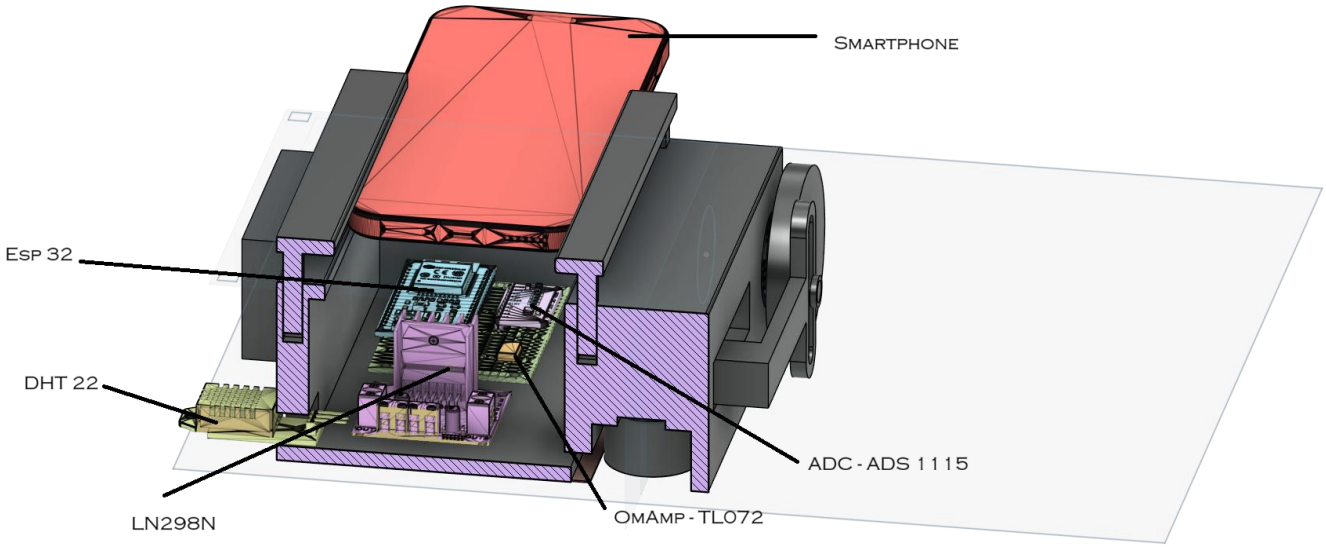

HIGHLY CONFIDENTIAL

3. What are the objectives of your invention?

The main goals of this invention are:

- To create a portable, inexpensive textile identification tool
- To make it possible to accurately sort fabrics without using labels
- To combine different types of sensing into one system:
    - analysis based on macro-images
    - sensing triboelectric signals
- To create a system that works mechanically well for making electrostatic signals consistently
- To offer a solution for textile identification that is easy for consumers to use and can be scaled up for use in industry

4. **Working of the invention**:

a. For the invention being a 'novel' process/method steps-

Please list down all the process/method steps and discuss the listed steps in detail including all the process parameters. Please provide a detailed description of how your invention operates when all the process/method steps are executed. Most importantly, please explain how these steps when executed achieve beneficial results like synergistic effect, yield, etc. with respect to the known processes.

The invention relates to a novel method for textile identification based on multi-modal data acquisition, processing and machine learning-based classification. The method consists of the following steps.

Step 1: Fabric Placement and Initialization

The sample fabric is placed into the interaction area of the device.

The smartphone is placed above the specimen using a fixed holder.

The system is initialized via a mobile application.

Process parameters:

- Fabric must be in flat contact condition
- Ambient conditions (temperature/humidity) are recorded

Step 2: Mechanical Friction Generation

A DC motor drives a Scotch yoke mechanism. This mechanism transforms rotational motion into linear reciprocating motion. The PVC interface block on the garment repeatably comes into contact with the fabric.

Process parameters:

- Motor speed: high-frequency rotation (continuous rubbing cycles)
- Stroke length: fixed based on yoke geometry
- Contact force: controlled via mechanical design

Step 3: Triboelectric Signal Generation

Due to friction, electrostatic charge is generated. Different fabrics produce distinct voltage patterns.

- Process parameters:
- Contact-separation frequency
- Surface material (PVC/Teflon)
- Fabric properties (natural/synthetic fibers)

Step 4: Signal Conditioning and Acquisition

Generated voltage is:

- amplified using an Op-Amp
- digitized using a 16-bit ADC (ADS1115)
- Environmental data is simultaneously captured via DHT22 sensor

Output:

- Static voltage signal (time series)
- Temperature & humidity data

Step 5: Optical Data Acquisition

The macro lens provides extraordinary closeness with excellent image quality for extreme up-close photography and can be attached to any smartphone camera.

Images represent:

- weave pattern
- fiber structure
- texture

Process parameters:

- Fixed focal distance
- Controlled lighting (ambient or assisted)

Step 6: Data Transmission

Sensor data is transmitted via:

- I2C -> ESP32 -> Bluetooth Low Energy (BLE)
- Image data is captured directly by the smartphone

Step 7: Dataset Creation and Training

A dataset is constructed consisting of:

- ~1000 macro images of fabrics
- Corresponding triboelectric signals

HIGHLY CONFIDENTIAL

Fabric classes include:

- Cotton
- Wool
- Polyester
- Nylon

The dataset is labeled and structured into:

- Training set
- Validation set

Step 8: Machine Learning Model Training

This work employs a YOLO-based deep learning system that was trained on our macro image dataset.

Training details:

Model: YOLO

Task: texture-based fabric classification

Input: macro images

Output: fabric class

In parallel, triboelectric signal features are extracted:

- peak voltage
- frequency patterns
- signal variance

Step 9: Multi-Modal Sensor Fusion

During inference:

- Image-based predictions (YOLO output)
- Signal-based features (triboelectric data)

are combined using a fusion model

Step 10: Real-Time Classification

The trained model predicts the dominant fabric type. Output is displayed on a mobile application interface.

Synergistic Effect

HIGHLY CONFIDENTIAL

This invention generates improved classification results by incorporating the use of two separate sensing modalities into a single machine learning system.

- Optical sensing (macro imaging)
- Triboelectric sensing (electrostatic response)

Individually:

- Optical methods fail for visually similar fabrics
- Triboelectric signals alone are noisy and environment-dependent

However, when combined:

- Optical data provides structural features
- Triboelectric data provides material-specific electrical signatures

This fusion:

- reduces ambiguity
- improves robustness
- increases classification accuracy significantly

Advantages over Existing Methods

- Eliminates dependency on expensive NIR/FTIR systems
- More reliable than vision-only models (YOLO alone)
- More practical than pure triboelectric sensing
- Enables low-cost, real-time, portable classification

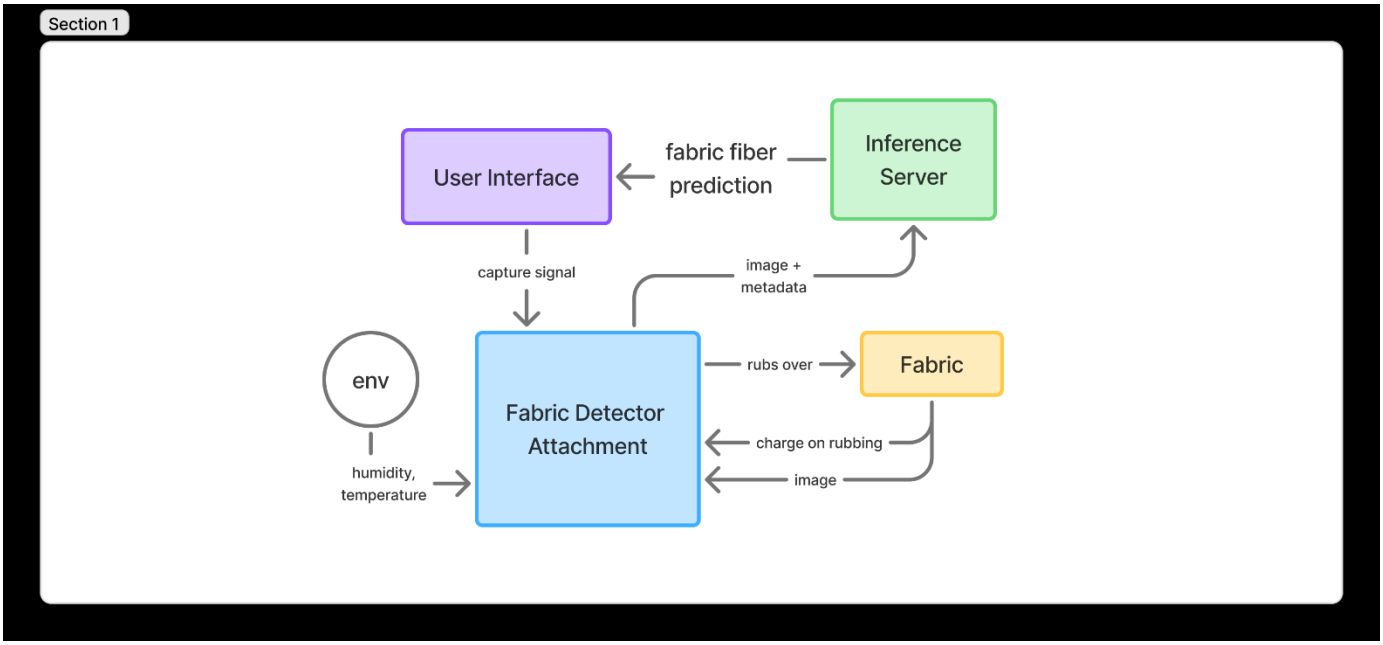

HIGHLY CONFIDENTIAL

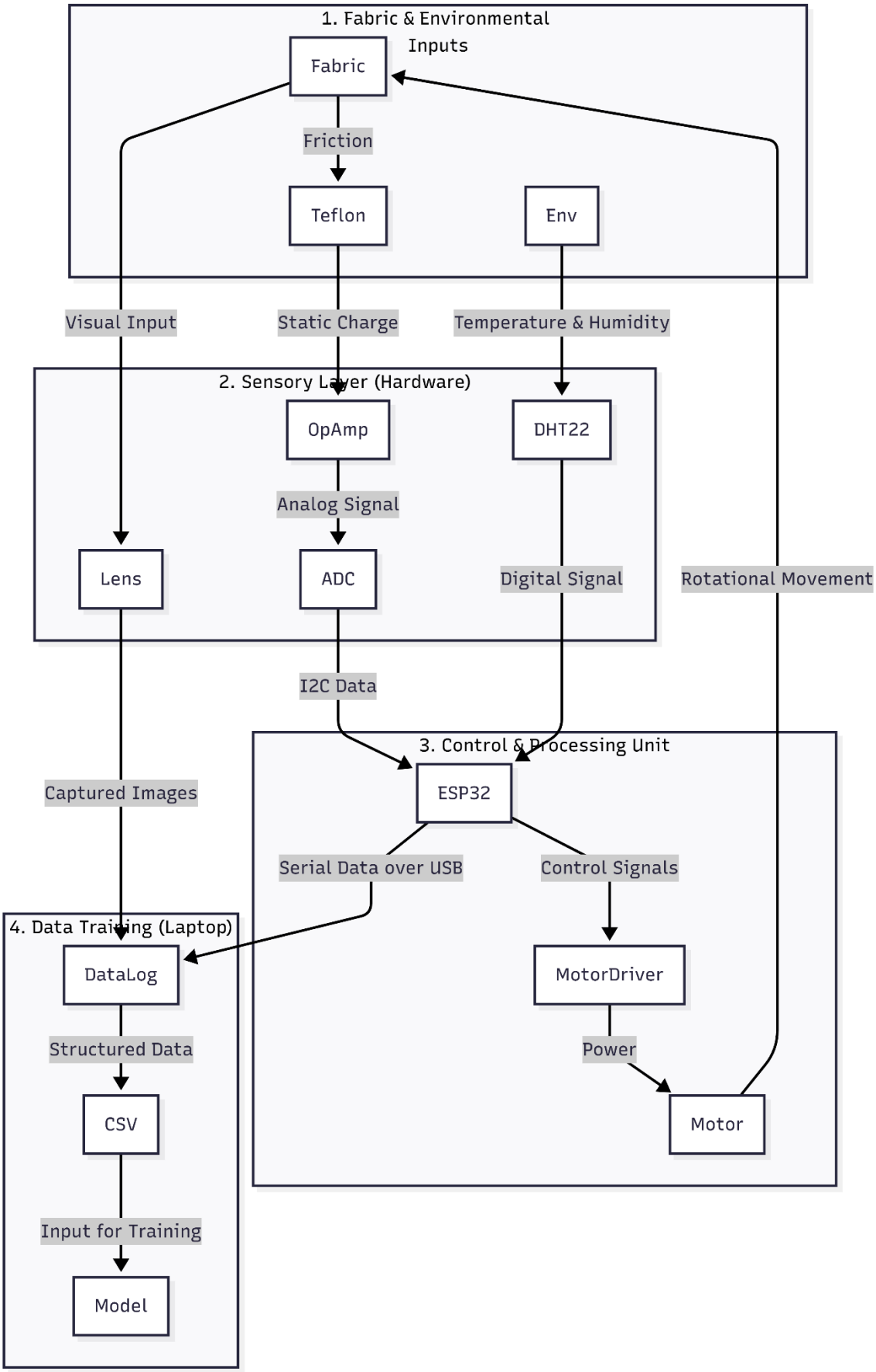

HIGHLY CONFIDENTIAL

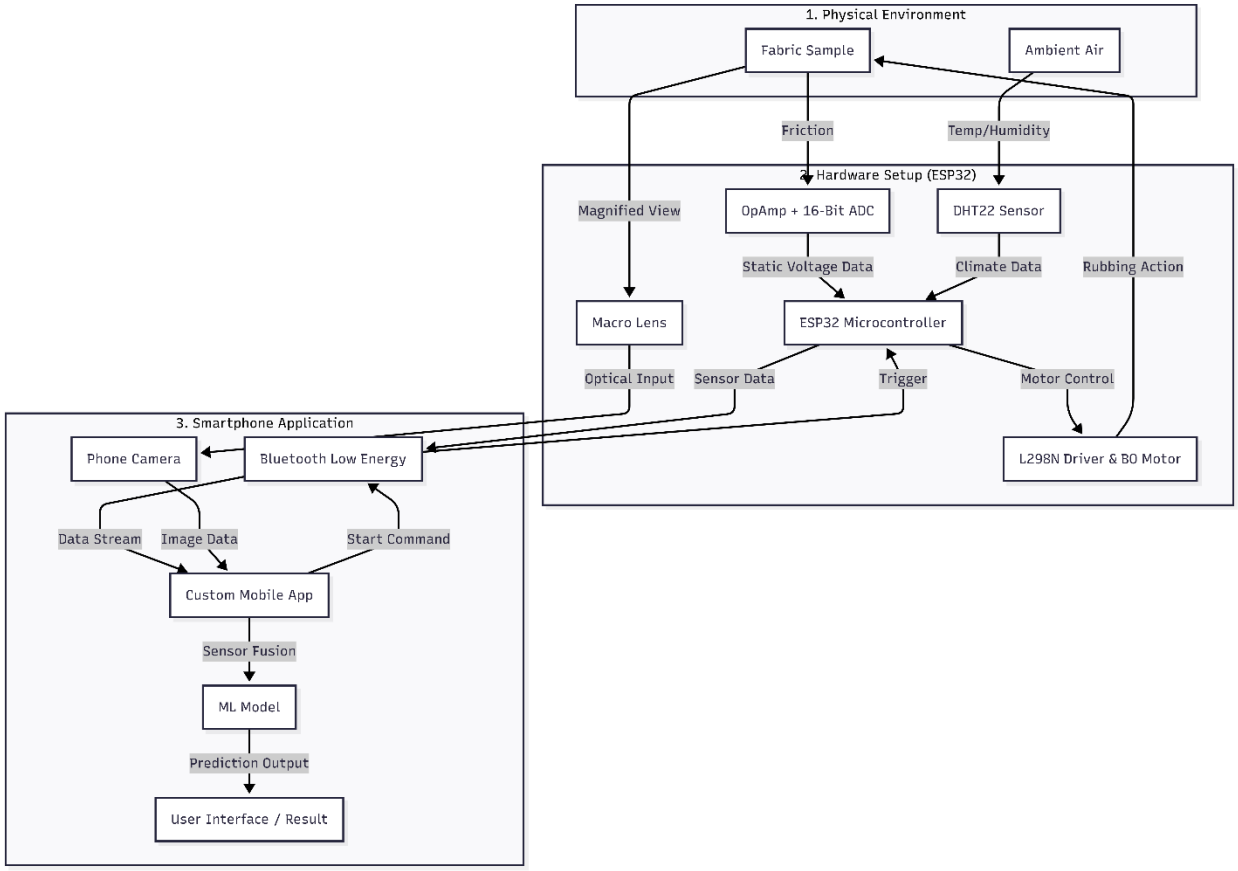

b. For the invention being a 'novel' Apparatus/Device/System-

Please list out the various components and technical features of the Apparatus/Device/System. Please explain the functions of the components and technical features, establish their connectivity with each other, and explain operation of the device/apparatus/system.

1. Components of the System

Mechanical Subsystem

- Enclosure / housing
- Smartphone holding frame
- Macro lens attachment (20×)
- Scotch yoke mechanism:
    - crank disc
    - pin
    - slotted yoke
- PVC rubbing block
- Copper electrode

Electronic Subsystem

- ESP32 microcontroller
- TL072 operational amplifier
- ADS1115 (16-bit ADC)
- L298N motor driver
- DC motor

- DHT22 sensor
- LM2596S buck converter
- Dual 3.7V battery pack
- Passive components

Software Subsystem

- Mobile application
- YOLO-based ML model
- Data acquisition & communication firmware

2. Connectivity

Motor -> driven by L298N, controlled by ESP32

Scotch yoke -> mechanically coupled to motor shaft

PVC block -> attached to yoke (reciprocating motion)

DHT22 -> ESP32 (digital input)

ESP32 <-> Smartphone via Bluetooth (BLE)

Smartphone camera + macro lens -> image input

The energy is stored in the battery pack and then it is converted through a buck converter to supply a regulated voltage to all of the modules.

3. Operation

- Fabric is placed under sensing region
- Motor drives Scotch yoke -> produces reciprocating motion
- PVC block rubs fabric -> generates triboelectric charge
- Charge is sensed via copper electrode
- Signal is amplified (TL072) and digitized (ADS1115)
- ESP32 collects sensor + environmental data
- Smartphone captures macro image
- Data is transmitted and processed
- ML model classifies fabric
- Result displayed to user

4. Technical Features

- Controlled friction using Scotch yoke
- High-resolution signal acquisition (16-bit ADC)
- Wireless data transmission (BLE)
- Integrated optical + electrical sensing

HIGHLY CONFIDENTIAL

TOP

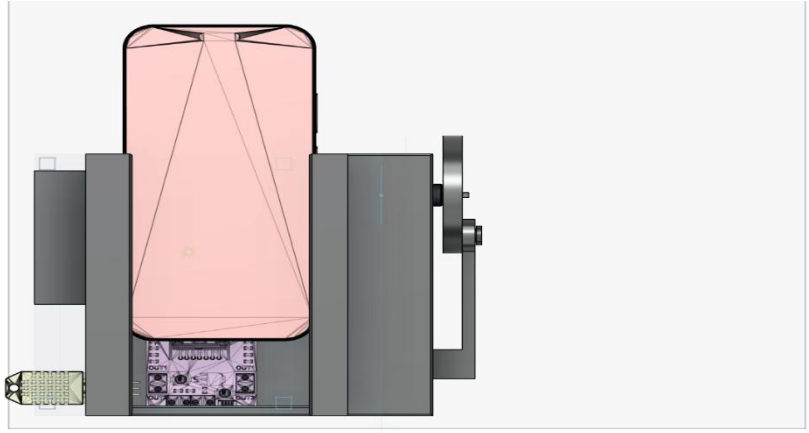

Right

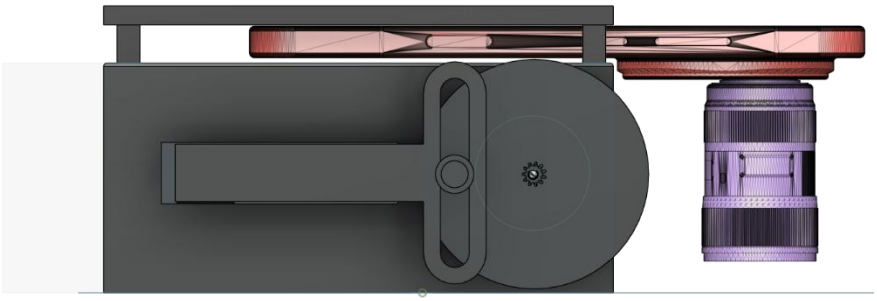

Left

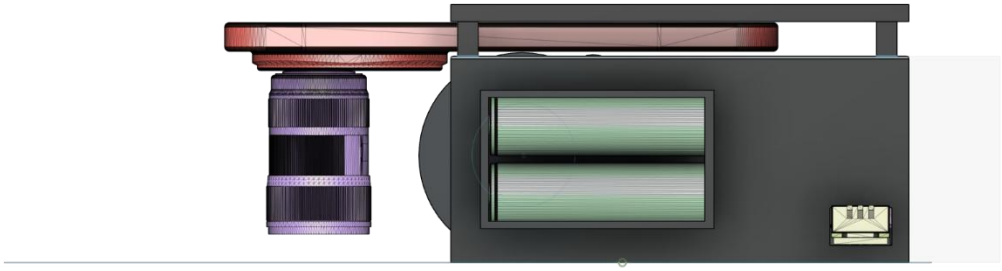

Isometric

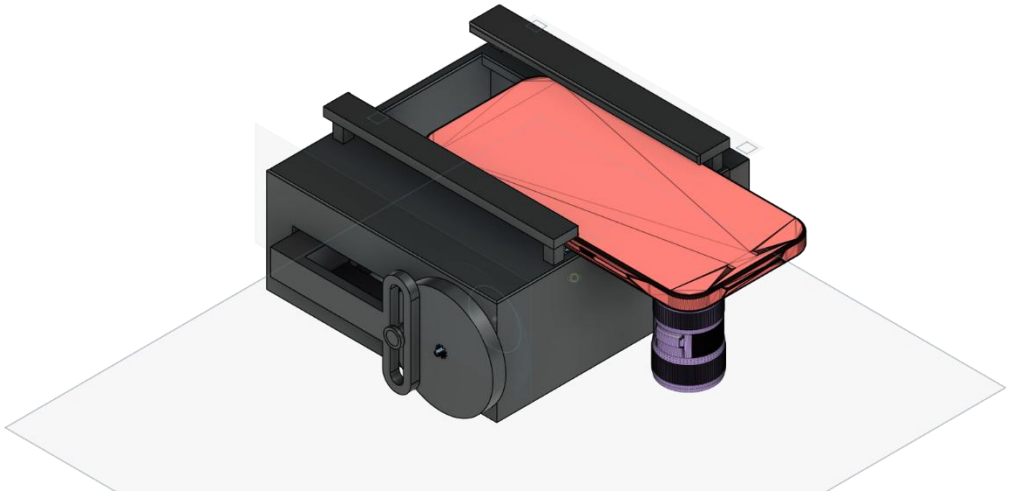

HIGHLY CONFIDENTIAL

Front

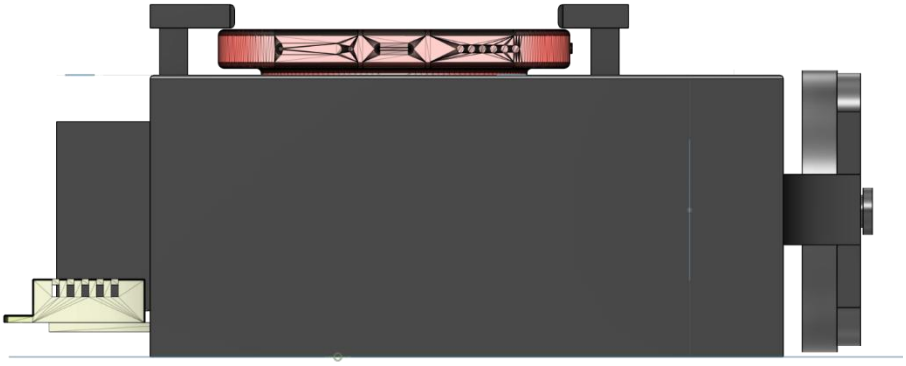

Bottom

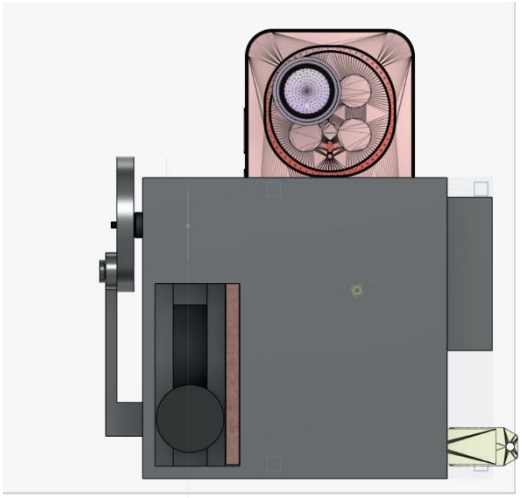

c. For the invention being a 'novel' Formulation/Composition-

Please list out the various components and constituents of the Formulation/Composition. Please mention concentrations/range of concentrations of each of the components and constituents and explain working of the invention by describing how the various components interact with each other. **Most importantly,** please explain how these components interact with each other to give a beneficial result i.e., synergistic effect, higher purity, lesser toxity, etc.(Please attach additional sheets if the space provided herein is not sufficient)

The invention is mostly an apparatus, but it also has a working sensing composition made up of materials that interact with each other, electrical interfaces, and environmental parameters that work together to make textile differentiation possible.

1. Components of the Functional Composition

Triboelectric Pair

- Fabric sample
- PVC / Teflon rubbing surface

Charge Collection Layer

- Copper electrode

Signal Conditioning Layer

- TL072 operational amplifier
- ADS1115 ADC

Environmental Inputs

- Temperature (DHT22)
- Humidity (DHT22)

Optical Input Layer

- Macro imaging (smartphone + 20× lens)

2. Interaction Between Components

- Triboelectric Interaction
  - When fabric contacts and separates from PVC:
    - electrons transfer based on material properties
    - different fabrics -> different charge magnitudes
- Charge Capture
  - Generated electrostatic charge is induced on the copper electrode
- Signal Formation
  - Weak analog signal is:
    - amplified (Op-Amp)
    - digitized (ADC)
- Environmental Influence
  - Humidity and temperature affect:
    - charge retention
    - signal stability
- Optical Feature Extraction
  - Macro images capture:
    - weave pattern
    - fiber density
    - texture

3. Parameter Ranges

- Voltage signal: low-level electrostatic (mV–V range)
- ADC resolution: 16-bit precision
- Environmental range:
  - Temperature: ~20–40°C
  - Humidity: moderate range
- Image dataset:
  - ~1000 labeled samples

4. Synergistic Effect

Individually:

- Triboelectric sensing -> sensitive but noisy
- Optical sensing -> limited for visually similar fabrics

HIGHLY CONFIDENTIAL

Combined composition results in:

- Electrical signal -> material-specific properties
- Image data -> structural properties

Their interaction produces:

- higher classification accuracy
- reduced ambiguity
- robustness against environmental variation

5. Beneficial Outcome

- Improved reliability over single-modality systems
- Low-cost alternative to spectroscopic methods
- Stable and repeatable identification through combined sensing
-

d. What are the novel features/steps of your invention?

- Multimodal: integration of triboelectric (electrical) signal and macroscopic imaging (optical) within a handheld device.
- A mechanically driven Scotch yoke mechanism is employed to produce controlled, repeatable friction cycles in order to consistently generate signals.
- Improved charge generation through the implementation of a flat PVC window surface to optimize performance.
- High resolution 16-bit signal acquisition with ADS1115.
- Real-time wireless data transmission (BLE via ESP32) enabling seamless interaction with a smartphone.
- Application of a YOLO-based machine learning model trained on macro textile images for classification.
- Sensor fusion approach combining electrical signatures and image features to improve classification robustness.
- Compact smartphone-integrated architecture, eliminating need for bulky external imaging systems.

e. What are the advantages of your invention?

- Low-cost solution compared to spectroscopic methods (e.g., NIR/FTIR)
- Portable and user-friendly, suitable for field use and consumer applications
- Non-destructive testing of fabrics
- Improved accuracy through multi-modal sensing (compared to single-method approaches)
- Real-time results via mobile application
- Scalable for industrial sorting and automation
- Adaptable to different fabric types and environmental conditions

f. What is the primary business or product application of your invention? Are there other business or product application that might extend past your immediate focus?

Primary Application

- Textile identification device for:
    - recycling and sorting industries

    - garment verification (when labels are missing or unreliable)

Extended Applications

- Smart retail systems for fabric authentication
- Quality control in textile manufacturing
- Integration into automated sorting lines
- Educational and research tool for material analysis
- Consumer product for classification of cloth categories in general life purchases

g. What could be the possible Modifications/Alternatives of your invention, if any?

- Replacing the Scotch yoke mechanism with:
    - linear actuator
    - cam-based system
- Using alternative triboelectric materials:
    - PTFE (Teflon)
    - nylon or other polymers
- Replacing triboelectric sensing entirely with:
    - capacitive sensing
    - piezoelectric sensors
- Using:
    - higher-resolution industrial cameras instead of smartphone
    - embedded camera module instead of external device
- Replacing YOLO with:
    - CNN-based classifiers
    - transformer-based vision models
- Cloud-based processing instead of on-device inference
- Integration of additional sensors:
    - pressure sensors
    - optical spectroscopy (hybrid system)

These alternatives may replicate parts of the system but do not provide the same combined low-cost, portable, dual-sensing advantage.

h. Has the invention been made and/or tested? Please provide details of any working example(s) that you would have.

The invention has been developed and tested through a working prototype. The system includes a mechanical rubbing setup based on a Scotch yoke mechanism, sensing electronics (Op-Amp, ADC, ESP32), and a smartphone-mounted macro lens for image capture.

A dataset of around 1000 macro images was collected along with corresponding triboelectric voltage readings for different fabrics such as cotton, polyester, wool, and nylon. During testing, fabric samples were subjected to controlled rubbing, while voltage signals and images were recorded simultaneously.

The results showed clear variation in electrical signals across fabric types. The YOLO-based model was able to classify fabrics using image data, and performance improved further when both image and signal data were used together.

Overall, the prototype demonstrates that the approach is practical and that combining multiple sensing methods improves reliability in fabric identification.

****

HIGHLY CONFIDENTIAL