# IIoT and Cloud Computing (CS5005)

Lecture – 12

Communication Channels - 4

INDIAN INSTITUTE OF INFORMATION TECHNOLOGY, DESIGN AND MANUFACTURING, KANCHEEPURAM

Dr. Sanjeet Kumar Nayak

Assistant Professor

Department of Computer Sc. and Engg.

# Communication with Single board Computers

# GPIO

GPIO (General Purpose Input/Output):

- GPIO refers to a set of pins on a microcontroller or microprocessor that can be configured as either input or output.
- These pins allow the microcontroller to interact with external devices, sensors, or other microcontrollers.
- GPIO pin can be used to read the state of a button (input) or control the state of an LED (output).
- Ex: Turn an LED ON/OFF

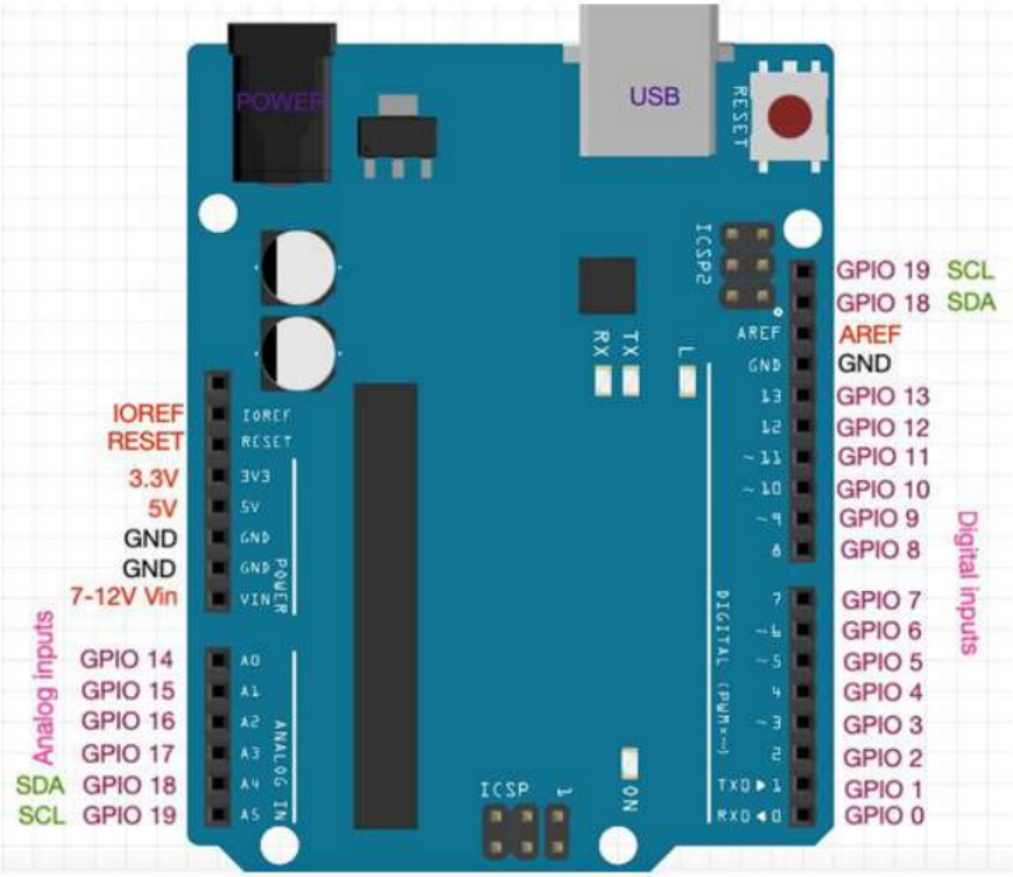

# SPI Communication

- SPI, which stands for **Serial Peripheral Interface**
- Communication protocol commonly used in embedded systems, including Arduino.
- It allows multiple peripheral devices to communicate with a microcontroller
- In the context of Arduino, SPI is often used to connect the microcontroller to other devices
  - **MISO (Master In Slave Out):** This line carries data from the slave device to the master.
  - **MOSI (Master Out Slave In):** This line carries data from the master to the slave device.
  - **SCK (Serial Clock):** This line provides the clock signal that synchronizes the data transfer between the master and slave.
  - **SS/CS (Slave Select/Chip Select):** This line is used to select the specific slave device with which the master wants to communicate.

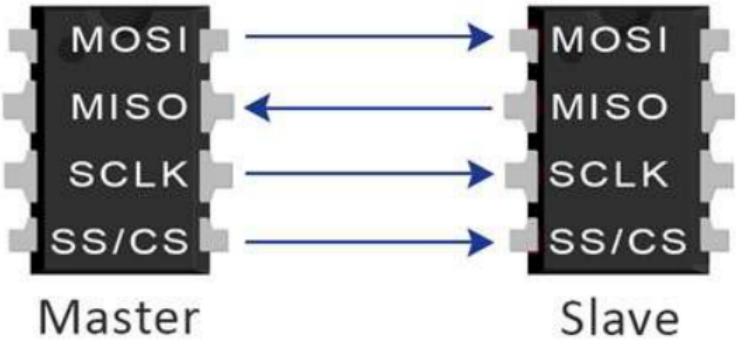


Two Arduino UNO can communicate

# UART

- UART, or **universal asynchronous receiver-transmitter**, is one of the most used device-to-device communication protocols.
- UART can work with many different types of serial protocols that involve transmitting and receiving serial data.
- In serial communication, data is transferred bit by bit using a single line or wire.
- Embedded systems, microcontrollers, and computers mostly use UART as a form of device-to-device hardware communication protocol.
- Among the available communication protocols, UART uses only two wires for its transmitting and receiving ends.

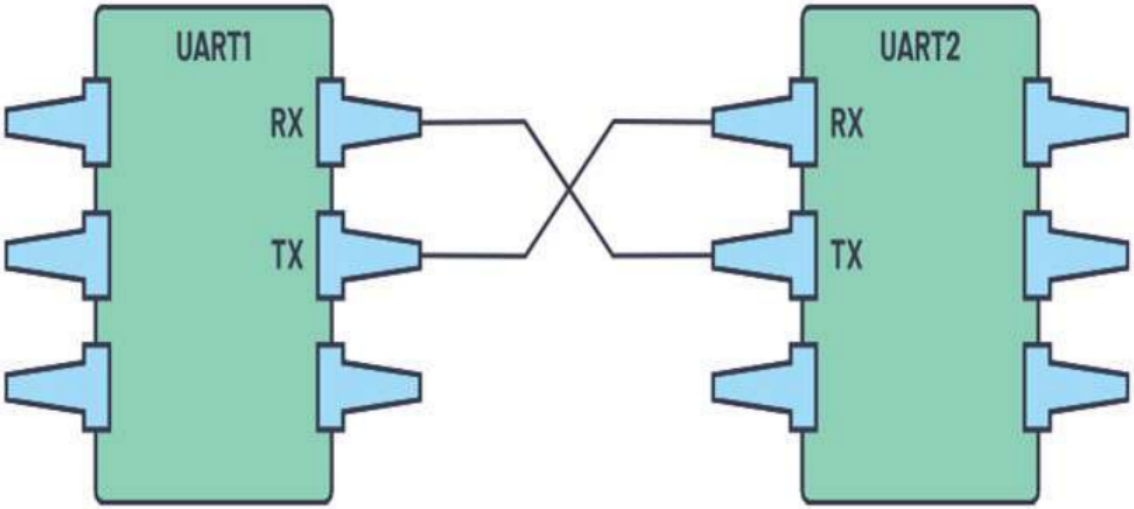


Arduino with External WiFi Module (ESP 8266)

# I2C

I2C, which stands for **Inter-Integrated Circuit**

**Components:**

- Master: The device that initiates communication and controls the bus.
- Slave: The device that responds to the master's commands.
- Bus: The two-wire communication interface connecting the master and slaves.

**Communication Lines:**

- SDA (Serial Data Line): Carries the actual data being transmitted between devices.
- SCL (Serial Clock Line): Carries the clock signal generated by the master to synchronize data transfer.

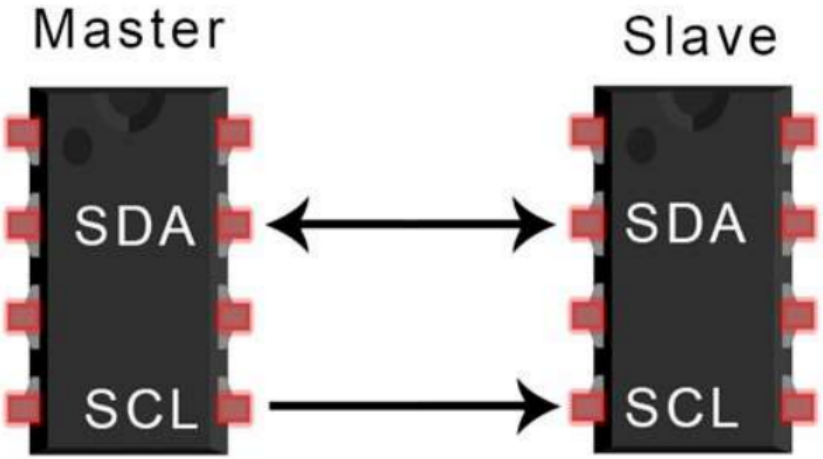


Arduino with Accelerometer

| Interface | Type | Wires | Speed | Complexity | Use |
|---|---|---|---|---|---|
| GPIO | Digital control | 1 | Low | Very simple | LED |
| UART | Asynchronous serial | 2 | Medium | Simple | PC |
| $I^2C$ | Synchronous serial | 2 | Medium | Moderate | Sensors |
| SPI | Synchronous serial | 4 | High | Moderate | Displays |

Thank You

Any Questions?