UP135 Notes

Notes by Gene

2025 – 2026

Contents

1 Week 1 (Aug 24 – Aug 30) 6
- 1.1 Classical Computation Theory . . . 6
- 1.2 Single-Tape Turing Machine (TM) . . . 6
- 1.3 Church-Turing Thesis (1936) . . . 7
- 1.4 The Halting Problem . . . 7
- 1.5 Uncompubtability . . . 8

2 Week 2 (Aug 31 – Sep 6) 8
- 2.1 Computational Complexity . . . 8
- 2.2 Church-Turing Revisited . . . 9
- 2.3 Characterizing Computation . . . 9
- 2.4 More on the NP . . . 10
- 2.5 Boolean Satisfaction Problem (SAT) . . . 10

3 Week 3 (Sep 7 – Sep 13) 10
- 3.1 Non-Deterministic Turing Machines (NDTMs) . . . 10
- 3.2 P and NP: Alternate Definitions . . . 12
- 3.3 SAT $\rightarrow$ 3SAT . . . 13
- 3.4 Cook-Levin Theorem Proof . . . 13
  - 3.4.1 The Table . . . 13
  - 3.4.2 The Formula . . . 14
  - 3.4.3 Analysis . . . 15
- 3.5 Complexity Class Relations (so Far) . . . 15

4 Week 4 (Sep 14 – Sep 20) 16
- 4.1 Review: Complexity Classes . . . 16
- 4.2 PSPACE-hard & PSPACE-complete . . . 16
- 4.3 Probabilistic Turing Machines . . . 16
- 4.4 $NP \cap co\text{-}NP$ . . . 17
- 4.5 Reversible Computation . . . 17

5 Week 5 (Sep 21 – Sep 27) 17
- 5.1 Postulates of Quantum Mechanics . . . 17
- 5.2 Quantum Computing Basics . . . 17
  - 5.2.1 Different Basis . . . 17

5.2.2 Quantum Gates . . . 17
5.3 Relationship Between Gates . . . 18
5.4 Other Important Gates . . . 18
5.5 The Hadamard Gate . . . 19

6 Week 6 (Sep 28 – Oct 4) 19
6.1 Bell Basis . . . 19
6.1.1 Constructing the Bell Basis . . . 19
6.1.2 Measuring the Bell Basis . . . 20
6.2 Quantum Teleportation . . . 21
6.3 Superdense Coding . . . 22
6.4 Entanglement Swapping . . . 22
6.5 Probabilistic & Quantum Complexity Classes . . . 23
6.5.1 Probabilistic TMs: *BPP* and *MA* . . . 23
6.5.2 Quantum Computing: *BQP* and *QMA* . . . 24

7 Week 7 (Oct 5 – Oct 11) 24
7.1 Resource Theory . . . 24
7.2 Quantum Computation . . . 25
7.2.1 Boolean Logic . . . 25
7.2.2 Oracles . . . 25
7.3 Deutsch's Algorithm . . . 26
7.4 More Gate Identities . . . 26

8 Week 8 (Oct 12 – Oct 18) 27
8.1 Deutsch-Jozsa Algorithm . . . 27
8.2 3SAT with a Quantum Circuit . . . 28
8.2.1 Implementation of AND and OR . . . 28
8.2.2 Combined Circuit . . . 28
8.3 Bernstein-Vazirani Algorithm . . . 29
8.3.1 Mathematics . . . 29
8.3.2 Gate Identities . . . 30
8.4 Pure vs. Mixed States . . . 30
8.5 Density Matrices . . . 31
8.5.1 Properties . . . 31
8.5.2 QM with Density Matrices . . . 31

9 Week 9 (Oct 19 – Oct 25) 32
9.1 Partial Trace . . . 32
9.1.1 Example . . . 32
9.1.2 Implications & Uses . . . 32
9.2 Decoherence . . . 33
9.3 Simon's Algorithm . . . 33
9.3.1 Example . . . 34

10 Week 10 (Oct 26 – Nov 1) 34
10.1 Fourier Analysis . . . 34
10.1.1 Vector Spaces . . . 34

10.1.2 Function Spaces . . . 35
10.1.3 Fourier Analysis . . . 35
10.2 Fourier Transform . . . 36
10.2.1 Introduction . . . 36
10.2.2 Discrete Fourier Transform . . . 36

11 Week 11 (Nov 2 – Nov 8) 38
11.1 Fourier Transform Basis . . . 38
11.2 More with the QFT Gate . . . 38

12 Week 12 (Nov 9 – Nov 15) 39
12.1 QFT Circuit . . . 39
12.2 QFT with Decimals . . . 40
12.3 Quantum Phase Estimation . . . 40
12.3.1 Analysis . . . 40
12.3.2 Step 1 . . . 40
12.3.3 Step 2 . . . 41
12.3.4 Examples . . . 42

13 Week 13 (Nov 16 – Nov 22) 43
13.1 Grover's Algorithm . . . 43
13.2 Procedure . . . 43
13.2.1 Geometry . . . 43
13.2.2 Time Complexity . . . 44
13.2.3 Constructing V . . . 44
13.2.4 Constructing W . . . 45
13.2.5 Example: 2 Bits . . . 46
13.3 Example: 3SAT . . . 46
13.3.1 V and W in Circuits . . . 46
13.3.2 Screenshot . . . 47

14 Week 14 (Nov 23 – Nov 29) 48
14.1 Basics of Cryptography . . . 48
14.1.1 The One-Time Pad . . . 48
14.1.2 Key Distribution . . . 48
14.2 Diffie-Hellman Key Exchange . . . 49
14.3 RSA . . . 50
14.4 Quantum Key Distribution (BB84) . . . 50

15 Winter Break 51

16 Winter Break 51

17 Week 17 (Jan 12 – Jan 16) 51
17.1 Review of Number Theory . . . 51
17.1.1 Generators (Primitive Roots mod N) . . . 51
17.1.2 Miscellaneous Topics . . . 52
17.2 Breaking RSA . . . 53
17.2.1 1. Finding p and q . . . 53

17.2.2 2. Without Finding p and q . . . 54
17.3 Shor's Algorithm: Overview . . . 54

18 Week 18 (Jan 19 – Jan 23) 55
18.1 Quantum Subroutine of Shor's Algorithm . . . 55
18.2 Shor's Algorithm: More Steps . . . 56
18.2.1 Measuring an integer . . . 57
18.2.2 Measuring a non-integer . . . 57
18.2.3 Interpreting results . . . 58

19 Week 19 (Jan 26 – Jan 30) 58
19.1 Review: How to Crack RSA with Shor's . . . 58
19.1.1 RSA Procedure . . . 58
19.1.2 Shor's Algorithm . . . 58
19.1.3 Order-Finding Subroutine . . . 59
19.2 Bonus: Cracking Diffie-Hellman with Shor's . . . 60
19.2.1 Diffie-Hellman Key Exchange . . . 60
19.2.2 Quantum Algorithm . . . 61
19.3 Continuum Limit of Wavefunctions . . . 62
19.3.1 Dr. Oas's Grad School Paradox . . . 62
19.4 The Schrödinger Equation . . . 63
19.4.1 Time-Dependent Form (General) . . . 63
19.4.2 Time-Independent Form . . . 63

20 Week 20 (Feb 2 – Feb 6) 64
20.1 Solutions to the Schrödinger Equation . . . 64
20.1.1 Infinite Square Well for TISE . . . 64
20.1.2 Superposition . . . 64
20.1.3 Finite Square Well for the TISE . . . 64
20.2 Quantum Tunneling . . . 66
20.3 Physical Realization of Quantum Computers . . . 67
20.3.1 DiVincenzo Criteria . . . 67
20.3.2 Criteria to Examine Implementations . . . 68

21 Week 21 (Feb 9 – Feb 13) 68
21.1 Rabi Oscillations & NMR . . . 68
21.2 Precession in x-Direction, Static Field . . . 68
21.2.1 Setup . . . 68
21.2.2 Larmor Precession . . . 69
21.3 Precession in General Direction, Static Field . . . 70
21.3.1 Setup . . . 70
21.3.2 Rabi's Formula, Spin Flip . . . 70
21.4 Precession in General Direction, Time-Varying Field . . . 71
21.4.1 Setup . . . 71
21.4.2 Spin Flopping . . . 71
21.5 Brief Note: Physical Realization of NMR . . . 73

22 Week 22 (Feb 16 – Feb 20) 74

22.1 Trapped Ions . . . 74
22.2 Quantum Harmonic Oscillator . . . 74
22.2.1 Schrodinger Equation . . . 74
22.2.2 Ladder Operators . . . 75
22.2.3 Energy Eigenstates . . . 75

23 Week 23 (Feb 23 – Feb 27) 76
23.1 Superconductors . . . 76
23.1.1 Cooper Pairs . . . 76
23.1.2 London Equations . . . 76
23.1.3 Meissner Effect . . . 77
23.2 Flux Quantization . . . 78
23.3 Josephson Junction . . . 78
23.4 Taste of Particle Physics . . . 80
23.4.1 Constants of Motion . . . 80
23.4.2 Indistinguishable Particles . . . 81
23.4.3 Bosons and Fermions . . . 81
23.4.4 Pauli Exclusion Principle . . . 82

24 Week 24 (Mar 2 – Mar 6) 82
24.1 Interpretations of Quantum Mechanics . . . 82
24.1.1 Questions to consider . . . 82
24.1.2 Some options . . . 82

25 Week 25 (Mar 9 – Mar 13) 84
25.1 Quantum Error Correction . . . 84
25.2 Simple 3-Qubit Code . . . 85
25.2.1 Bit Flips . . . 85
25.2.2 Phase Flips . . . 86
25.2.3 Other Errors . . . 87
25.3 Shor's 9-Qubit Code . . . 88

26 Week 26 (Mar 16 – Mar 20) 88
26.1 Steane Code . . . 88
26.1.1 Setup . . . 88
26.1.2 Syndrome Detection . . . 89

27 Week 27 (Mar 30 – Apr 3) 90
27.1 5-Qubit Code . . . 90
27.2 Transverse Gates . . . 91
27.3 Non-Transversal Gates . . . 92
27.4 Fault-Tolerant Computation . . . 93

28 Week 28 (Apr 6 – Apr 10) 93
28.1 Basics of Information Theory . . . 93
28.2 Shannon Entropy . . . 94
28.2.1 Properties . . . 94
28.2.2 Shannon's Theorem . . . 95

29 Week 29 (Apr 13 – Apr 17) **96**
29.1 Von Neumann Entropy . . . 96
29.1.1 Properties . . . 96
29.1.2 Examples . . . 97

30 Week 30 (Apr 20 – Apr 24) **98**
30.1 Comparison: Shannon Entropy vs. Von Neumann Entropy . . . 98
30.2 Information Theory Representation of Measurement . . . 99

31 Week 31 (Apr 27 – May 1) **100**
31.1 GHZ-5 Entropy Diagram . . . 100

1 Week 1 (Aug 24 – Aug 30)

1.1 Classical Computation Theory

- $f(x)$ takes input and gives output.
- From Physics: limited to 10^{43} operations/sec and 10^{122} total bits.
- From Math: more problems exist than programs to solve them.

1.2 Single-Tape Turing Machine (TM)

Software:

- A: Input/output alphabet (input string x, output string y)
- S: Internal alphabet (e.g. $+, -, \times, \otimes, ...$)
- $q_i \in Q$: Internal state of computer (start at q_0, stop at q_{halt})
- δ: Transition rule; what action to take given x_i, q_i

$$\delta : Q \times S \longrightarrow Q \times S \times \{-1, 0, 1\}$$

Hardware:

- Infinite tape
- Each cell contains 1 symbol $\in S$
- Tape head moves 1 cell left/right per step
- Read symbol s_i in cell, compute action based on q_i. Option is either erase/write to cell and move left/right/stay
- Label position by p_t at some time step t

Starting config:

- First n cells contain input $\alpha \in A$, rest blank
- Head is at left edge $p_0 = 1$ in state q_0
- General config $< s_0, s_1, s_2, ...; p_t, q_t > \ \rightarrow \ \delta(q_0, \alpha) \ \rightarrow < \sigma_1; p_1, q_1 >$

Possibilities:

- Halts: reach q_{halt}. Or q_{accept}/q_{reject}
- Never halts: runs forever

1.3 Church-Turing Thesis (1936)

The class of functions computable by a Turing Machine is equivalent to the class of functions computable by an algorithm.

- A definition of computation.
- A language is *Turing Recognizable* if some TM recongizes it. Also called *Recursively Enumerable (RE)*
- A language is *Turing Decidable* if some TM decides it. Also called *Recursive (R)*
- *RE*: class of decision problems for which 'yes' can be verified by TM in finite time
- *R*: class of decision problems for which 'yes' or 'no' can be verified by TM in finite time.

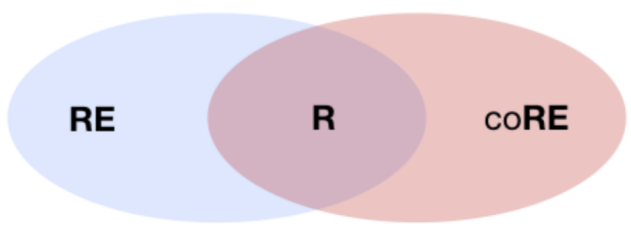

$$R = RE \cap coRE$$

1.4 The Halting Problem

Consider program $h([M])$, taking program $[M]$ as input.

- $h([M]) = 1$ if $M(x)$ halts
- $h([M]) = 0$ if $M(x)$ runs forever

Make small modification to create program P:

```
P(x){
    if(h(x) = 0): halt
    else: loop forever
}
```

Feed P into P:

- If P halts, P runs forever.
- If P runs forever, P halts.
- Thus P and subsequently h cannot exist.

1.5 Uncompubtability

Hyperoperations:

$$\begin{aligned}
\phi(a,b,0) &= a+b \\
\phi(a,b,1) &= a \cdot b \\
\phi(a,b,2) &= a \uparrow b = a^b \\
\phi(a,b,3) &= a \uparrow\uparrow b = a^{a^{a^{\cdot^{\cdot^{\cdot}}}}} && \text{(exponentiate } a\text{, } b-1 \text{ times)} \\
\phi(a,b,4) &= a \uparrow\uparrow (a \uparrow\uparrow b) && \text{(tetrating } a\text{, } b-1 \text{ times)} \\
&\quad etc.
\end{aligned}$$

Example:

$$\begin{aligned}
3 \uparrow\uparrow 3 &= 3 \uparrow (3 \uparrow 3) \\
&= 3^{3^3} = 3^{27} \\
3 \uparrow\uparrow\uparrow 3 &= 3 \uparrow\uparrow (3 \uparrow\uparrow 3) \\
&= 3 \uparrow\uparrow 3^{27} = \text{big}
\end{aligned}$$

Graham's number: g_{64}

$$\begin{aligned}
g_1 &= 3 \uparrow\uparrow\uparrow 3 \\
g_2 &= 3 \uparrow^{g_1} 3
\end{aligned}$$

Ackermann numbers: $A(n)$

$$A(n) = n \uparrow^{n-2} n \quad \text{OR} \quad A(n) = n \uparrow^{n} n$$

Disproved that only primitive recursive functions define computability — TM can list out $A(n)$.

2 Week 2 (Aug 31 – Sep 6)

2.1 Computational Complexity

Two areas of concern:

- TIME: amt of computational steps to solve problem
- SPACE: amt of memory storage needed to solve problem

Use Big-O notation to simplify to leading orders:

- Big-O: $O(f(n))$, upper bound for running time
- Big-Ω: $\Omega(f(n))$, lower bound for running time
- Big-Θ: $\Theta(f(n))$, upper bounded by O and lower bounded by Ω

Efficiency:

- Efficient algorithms: $O(n^k)$ for some k
- Inefficient algorithms: $\Omega(c^n)$ for some c

2.2 Church-Turing Revisited

- **Classic Church-Turing Thesis**: "The class of functions computable by a Turing Machine is equivalent to the class of functions computable by means of an algorithm."
- **Strong Church-Turing Thesis**: "Every *realistic* model of computation is polynomial time reducible to a Universal TM."
- **Extended Church-Turing Thesis**: "Any algorithmic process can be efficiently simulated using a Probabilistic TM."
- **Physical Church-Turing Thesis**: "Any physical process can be realized by a TM."

Quantum computers don't challenge the CT-Thesis, but they do challenge the Extended CT-Thesis.

2.3 Characterizing Computation

- TIME($f(n)$): Class of problems that grows in $O(f(n))$ in time for input length n
- SPACE($f(n)$): Class of problems that grows in $O(f(n))$ in space (memory)

TIME($f(n)$) $\subseteq$ SPACE($f(n)$), since a TM can only access 1 piece of memory in each time step.

Classes:

- *P*: class of problems solvable by TM in TIME(n^k)
- *PSPACE*: class of problems solvable by TM in SPACE(n^k)
- *EXP*: class of problems solvable by TM in TIME(2^{n^k}) — infeasible, inefficient
- *NP*: class of problems for which proof of *yes* result is in TIME(n^k)
- *coNP*: class of problems for which proof of *no* result is in TIME(n^k)

Known: $P \subseteq NP \subseteq PSPACE$ Conjectured: $P \neq NP \neq PSPACE$

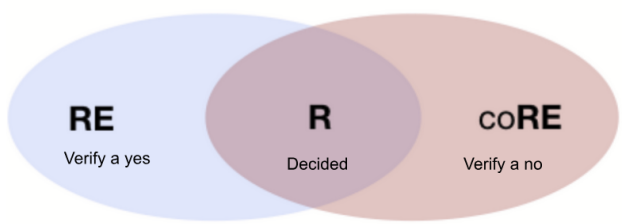

What can be computed?

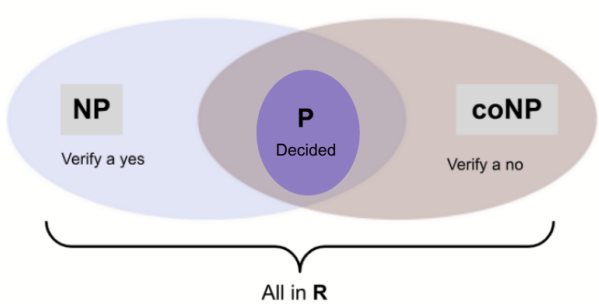

What can be computed *efficiently* (polynomial time)?

Note that *NP* $\cap$ *coNP* $\neq P$.

2.4 More on the NP

NB: "language" = "decision problem"

- *NP-hard*: class of languages L for which any problem $L' \in$ *NP* is polynomial-time reducible to L
  - i.e. Any problem in *NP* can be reduced to an *NP-hard* problem in polynomial time.
- *NP-complete*: class of languages L for which $L \in$ *NP-hard* and $L \in$ *NP*
  - "the hardest" problems in NP

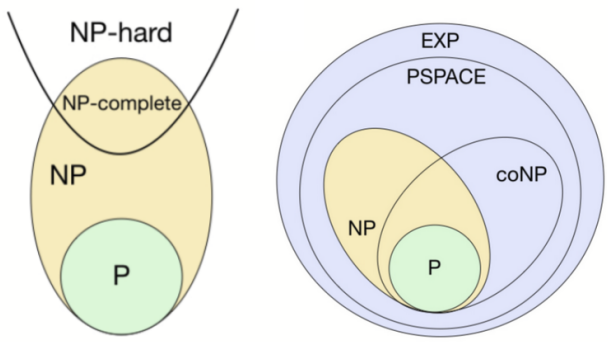

Assuming $P \neq NP$

2.5 Boolean Satisfaction Problem (SAT)

- Given Boolean variables $x_1, x_2, ..., x_n$ and Boolean operators $\wedge, \vee, \neg$
- Conjunctive Normal Form (CNF): $\vee$ inside parentheses, $\wedge$ out. E.g. $(x_1 \vee x_3 \vee \neg x_4 \vee x_5) \wedge (x_2 \vee \neg x_4)$...

  SAT-decision: Given a Boolean formula in CNF, does there exist $(x_1, x_2, ..., x_n)$ that satisfies the expression (eval to 1)?

Cook-Levin Theorem: SAT is NP-Complete. That is, *all NP problems can be reduced to SAT.*

3 Week 3 (Sep 7 – Sep 13)

3.1 Non-Deterministic Turing Machines (NDTMs)

A deterministic TM (DTM) can be represented as

$$\delta : Q \times \Gamma \longrightarrow Q \times \Gamma \times \{L, R\}$$

- δ: transition function
- Q: set of states
- Γ: alphabet

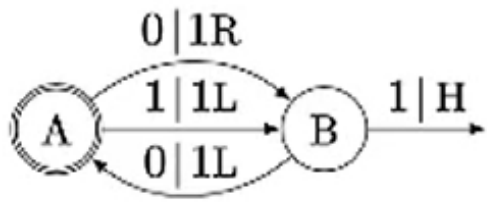

There's exactly one arrow out of each state for each transition (0 or 1).

An NDTM can be represented as

$$\delta : Q \times \Gamma \longrightarrow \mathcal{P}(Q \times \Gamma \times \{L, R\})$$

- The power set of all possible transitions.
- Imagine at every decision point, the Turing Machine clones itself and runs in parallel.

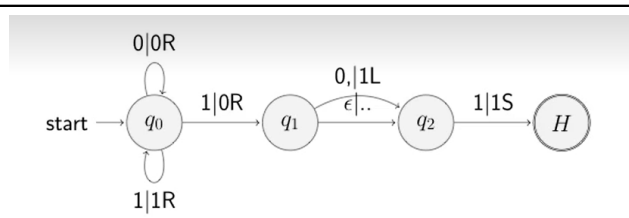

Can be more than one arrow out of each state for each transition (0 or 1).

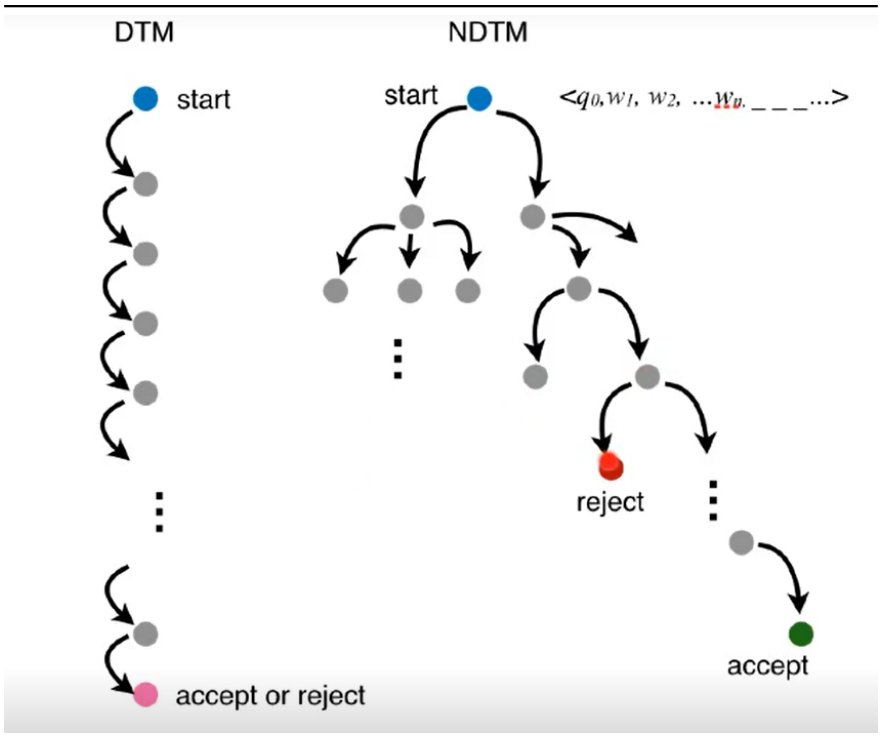

Comparison of DTM and NDTM

Theorem: Any language accepted by an NDTM will be accepted by a DTM.

3.2 P and NP: Alternate Definitions

- **P**: class of languages decidable in polynomial time on single-tape DTM.

$$P = \bigcup_k TIME(n^k)$$

- **NP**:
  1) class of languages that have polynomial time verifiers.
     - Verifier for language A is algorithm V
     - $A = \{w | V \text{accepts} <\text{w, c}> \text{for some string c}\}$
     - Polynomial time verifier runs in $|w|^k$
  2) class of languages that are decidable in polynomial time on a single-tape NDTM:

$$NP = \bigcup_k NTIME(n^k)$$

*Recall:

- **NP-hard** is the class of languages L for which any problem $L' \in NP$ is polynomial-time reducible to L.
- **NP-complete** is the class of languages that are
  1) $L \in$ *NP-hard*
  2) $L \in NP$

3.3 SAT $\rightarrow$ 3SAT

Recall the SAT problem: Given a Boolean formula in CNF, e.g.

$$(x_1 \vee x_3 \vee \neg x_4 \vee x_5) \wedge (x_2 \vee \neg x_4) \wedge (x_3 \vee x_{12} \vee \neg x_{12}) \wedge ...$$

Does there exist $(x_1, x_2, ..., x_n)$ that satisfies the expression?

We can reduce SAT to 3SAT (3 variables per AND clause).

- Use dummy variables, e.g:
- $(x_1 \vee x_2 \vee x_3 \vee x_4) \longrightarrow (x_1 \vee x_2 \vee y_1) \wedge (\neg y_1 \vee x_3 \vee x_4)$
- $(x_1 \vee x_2 \vee x_3 \vee x_4 \vee x_5) \longrightarrow (x_1 \vee x_2 \vee y_1) \wedge (\neg y_1 \vee x_3 \vee y_2) \wedge (\neg y_2 \vee x_4 \vee x_5)$

Obviously in *NP*, but is it *NP-complete*?

3.4 Cook-Levin Theorem Proof

Follows Sipser chp. 7

Cook-Levin Theorem: SAT is NP-complete.

1) SAT is in *NP* (easy)
2) For all $A \in$ *NP*, A is polynomial-time reducible to SAT (hard)

We need to show the second part.

3.4.1 The Table

Reduction for A: Boolean formula ϕ that, for the input w, simulates an NDTM for A on w.

Let N be a NDTM that solves A in $O(n^k)$. We need to show that all NDTMs can be reduced to SAT in polynomial time. Represent N by a $n^k \times n^k$ table:

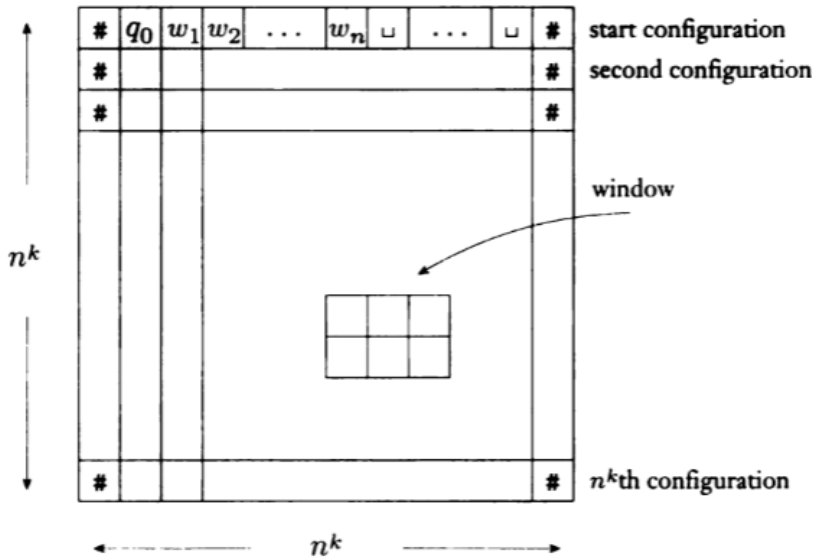

First row is initial state. Each row is the result of applying a delta transition to the row above. Boundaries are marked with #.

- Every accepting table for N on w corresponds to a computation branch of N on w.
- Whether N exists = Whether accepting table for N on w exists.

3.4.2 The Formula

$$\phi = \phi_{cell} \wedge \phi_{start} \wedge \phi_{move} \wedge \phi_{accept}$$

- ϕ_{cell}: each element in table has just 1 symbol.
- ϕ_{start}: start state is well-defined.
- ϕ_{move}: transitions between rows are legal.
- ϕ_{accept}: at least 1 row is the accept state (q_{accept}).

Let $x_{i,j,s} = 1$ if cell$[i, j]$ has symbol s, and $x_{i,j,s} = 0$ otherwise.

$$\phi_{cell} = \bigwedge_{1 \le i,j \le n^k} \left[\underbrace{\left(\bigvee_{s \in C} x_{i,j,s} \right)}_{\text{at least 1 var in each cell}} \wedge \underbrace{\left(\bigwedge_{\substack{s,t \in C \\ s \neq t}} (\bar{x_{i,j,s}} \vee \bar{x_{i,j,t}}) \right)}_{\text{only 1 var in each cell}} \right]$$

$$\begin{aligned}
\phi_{start} &= x_{1,1,\#} \wedge x_{1,2,q_0} \wedge \\
&= x_{1,3,w_1} \wedge x_{1,4,w_2} \wedge \ldots \wedge \\
&= x_{1,n+3,\sqcup} \wedge \ldots \wedge x_{1,n^k-1,\sqcup} \wedge x_{1,n^k,\#} \\
\phi_{move} &= \bigwedge_{1 \le i,j \le n^k} \text{(the 2 x 3 window at (i, j) is a legal transition)} \\
&= \bigvee_{a_1 \ldots a_6} x_{i,j,a_i} \quad \text{(for each cell } x_{i,j} \text{ and its symbol } a_i\text{)} \\
\phi_{accept} &= \bigvee_{1 \le i,j \le n^k} x_{i,j,q_{accept}}
\end{aligned}$$

3.4.3 Analysis

- ϕ_{cell}: $O(n^{2k})$
- ϕ_{start}: $O(n^k)$
- ϕ_{move}, ϕ_{accept}: $O(n^{2k})$

Total: ϕ can be found in $O(n^{2k})$, a polynomial factor reduction.

Therefore, any NP problem can be reduced to SAT in polynomial time, and SAT is NP-complete.

3.5 Complexity Class Relations (so Far)

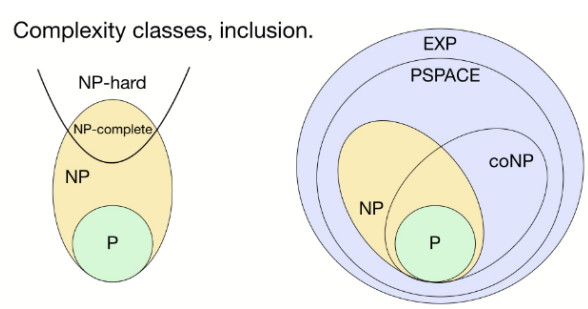

$P \subseteq NP \subseteq PSPACE = NSPACE \subseteq EXP$ but $P \subset EXP \ldots$

- *PSPACE*: class of languages solvable by DTM in polynomial space
- *NSPACE*: class of languages solvable by NDTM in polynomial space

(Click for Complexity Class Zoo Link)

4 Week 4 (Sep 14 – Sep 20)

4.1 Review: Complexity Classes

$$P \subseteq NP \subseteq \textit{PSPACE} = \textit{NSPACE} \subseteq \textit{EXP}$$
$$P \subset \textit{EXP}$$

4.2 PSPACE-hard & PSPACE-complete

- **PSPACE-hard**: All **PSPACE** problems can be polynomial-time reduced to **PSPACE-hard** problems.
- **PSPACE-complete**: Problems that are **PSPACE-hard** and in **PSPACE**.

Quantified Boolean Formulas (QBF): Boolean SAT problem with quantifiers $\forall$, $\exists$.

Truely Quantified Boolean Formula (TQBF): Determine if a full QBF is true or false.

$$\{\langle\phi\rangle \mid \ \phi \text{ is a true fully QBF}\}$$

The following limitations for a true, full QBF:

- Prenex normal form: all $\forall$, $\exists$ grouped at start of expression.
- Fully quantified: all variables bound by $\forall$, $\exists$.

4.3 Probabilistic Turing Machines

Deterministic TM (DTM):

$$\delta : Q \times \Gamma \longrightarrow Q \times \Gamma \times \{L, R\}$$

Non-deterministic TM (NDTM):

$$\delta : Q \times \Gamma \longrightarrow \mathcal{P}(Q \times \Gamma \times \{L, R\})$$

$$\mathcal{P} \text{ is power set}$$

Probabilistic TM (PTM):

$$\delta : Q \times \Gamma \longrightarrow \{Q \times \Gamma \times \{L, R\}, Q \times \Gamma \times \{L, R\}\}$$

2 choices

Bounded-error Probabilistic Polynomial time (BPP)

A string ω in the language L that the PTM accepts/rejects in polynomial-time probabilistically.

- $\omega \in L$: PTM accepts with prob. $\geq \frac{1}{2}$
- $\omega \notin L$: PTM rejects with prob. $\geq \frac{1}{2}$

Conjectured that **BPP = P**, but no proof yet.

4.4 *NP* $\cap$ *co-NP*

PRIMES: Is a natural number prime or composite?

- In **NP** and **co-NP**
- Found to be in **P** in 2002 (AKS primality test)

FACTORING: is a given number a factor of another?

- In **NP** and **co-NP**
- Suspected not to be in **P** (no proof)

4.5 Reversible Computation

QM employs unitary evolution (reversible computation).

Classical computation can be made reversible by using *ancilla bits*.

5 Week 5 (Sep 21 – Sep 27)

5.1 Postulates of Quantum Mechanics

1. **Quantum State**
   - Reprsented by normalized ket $|\psi\rangle$
   - Contains all information that can be known about system
   - In Hilbert space (space of all possible quantum states)
2. **Observables**
   - Physical properties that can be measured in an experiment
   - Represented by Hermitian operators that act on Hilbert space
3. **Measurement**
   - Probability of obtaining eigenvalue a_n in measurement of observable A on the system in state $|\psi\rangle$ is $\mathcal{P}(a_n) = |\langle a_n|\psi\rangle|^2$
   - Note: $|a_n\rangle$ is eigenvector corresponding to eigenvalue a_n.
4. **Time Evolution**
   - For a closed quantum system, described by unitary transformation.
   - $|\psi'\rangle = U|\psi\rangle$

5.2 Quantum Computing Basics

5.2.1 Different Basis

- Computational basis (HV): $|0\rangle = \begin{pmatrix}1\\0\end{pmatrix}$, $|1\rangle = \begin{pmatrix}0\\1\end{pmatrix}$
- Hadamard basis (PM): $|+\rangle = \frac{1}{\sqrt{2}}\begin{pmatrix}1\\1\end{pmatrix}$, $|-\rangle = \frac{1}{\sqrt{2}}\begin{pmatrix}1\\-1\end{pmatrix}$
- RL basis not used much.

5.2.2 Quantum Gates

Unitary operators, act on a qubit.

- $X = \begin{pmatrix} 0 & 1 \\ 1 & 0 \end{pmatrix}$: HV observable; flip qubit
- $Y = \begin{pmatrix} 0 & -i \\ i & 0 \end{pmatrix}$: RL observable
- $Z = \begin{pmatrix} 1 & 0 \\ 0 & -1 \end{pmatrix}$: PM observable; phase shift by π: $Z = \begin{pmatrix} 1 & 0 \\ 0 & e^{i\pi} \end{pmatrix}$
- $H = \frac{1}{\sqrt{2}} \begin{pmatrix} 1 & 1 \\ 1 & -1 \end{pmatrix}$: turns state into superposition of computational basis
- $S = \sqrt{Z} = \begin{pmatrix} 1 & 0 \\ 0 & i \end{pmatrix}$, another phase shift
- $T = \sqrt{S} = \begin{pmatrix} 1 & 0 \\ 0 & e^{i\pi/4} \end{pmatrix}$, phase shift by $\pi/4$ (but called $\pi/8$ for historical reasons)

5.3 Relationship Between Gates

Pauli matrices anti-commute: $XY = iZ$, but $YX = -iZ$, for example.

$$\sigma_a \sigma_b = i\epsilon_{abc}\sigma_c$$

Also, $H = \frac{1}{\sqrt{2}}(X + Z)$.

The anti-commutation operator works a little weirdly:

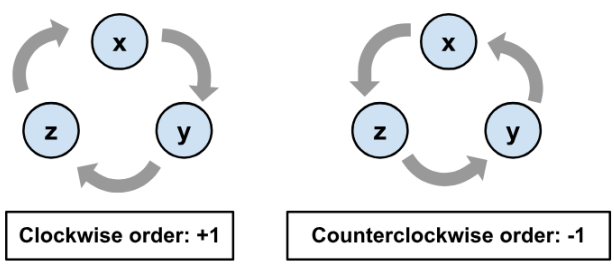

E.g. $\epsilon_{yzx} = +1$ because clockwise $y \to z \to x$

When dealing with products, it's usually faster to use tricks instead of using matrices. E.g.

$$XHX = \frac{1}{\sqrt{2}}X(X+Z)X = \frac{1}{\sqrt{2}}(X^3 + XZX) = \frac{1}{\sqrt{2}}(X - iYX)\text{...etc}$$

5.4 Other Important Gates

CNOT gate: Flips second qubit if the first qubit is 1.

- CNOT $= \left[\begin{array}{c|c} 1 & 0 \\ \hline 0 & X \end{array}\right] = \begin{pmatrix} 1 & 0 & 0 & 0 \\ 0 & 1 & 0 & 0 \\ 0 & 0 & 0 & 1 \\ 0 & 0 & 1 & 0 \end{pmatrix}$

- A white circle instead of a filled-in one means the reverse: flip if first qubit is 1.

Toffoli gate: Flips 3rd qubit if both the 1st and 2nd are 1.

5.5 The Hadamard Gate

In computational basis:

- $H|0\rangle = \frac{1}{\sqrt{2}}(|0\rangle + |1\rangle) = |+\rangle$
- $H|1\rangle = \frac{1}{\sqrt{2}}(|0\rangle - |1\rangle) = |-\rangle$
- $H|+\rangle = |0\rangle$
- $H|-\rangle = |1\rangle$

More generally, it creates a superposition of all inputs, a normalized sum of all n-length bitstrings ("Walsh-Hadamard Transform"):

$$H \otimes H \otimes ... \otimes H|00...0\rangle = H^{\otimes n}|0\rangle_n = \frac{1}{2^{n/2}} \sum_{y_0=0}^{1} |y_{n-1}\rangle ... |y_0\rangle$$

6 Week 6 (Sep 28 – Oct 4)

6.1 Bell Basis

6.1.1 Constructing the Bell Basis

Four entangled states:

$\lvert\phi_+\rangle = \dfrac{\lvert 00\rangle + \lvert 11\rangle}{\sqrt{2}}$	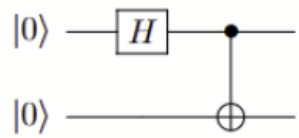
$\lvert\phi_-\rangle = \dfrac{\lvert 00\rangle - \lvert 11\rangle}{\sqrt{2}}$	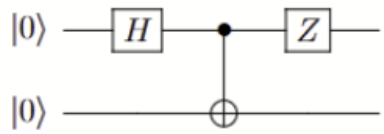
$\lvert\psi_+\rangle = \dfrac{\lvert 01\rangle + \lvert 10\rangle}{\sqrt{2}}$	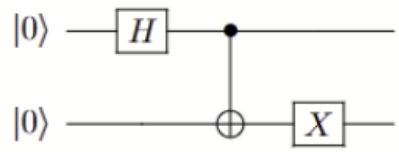
$\lvert\psi_-\rangle = \dfrac{\lvert 01\rangle - \lvert 10\rangle}{\sqrt{2}}$	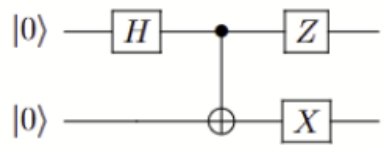

Bell States & Construction with Quantum Circuits

More simply,

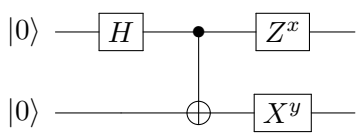

Here,

- $(x, y) = (0, 0) : |\phi_+\rangle$
- $(x, y) = (1, 0) : |\phi_-\rangle$
- $(x, y) = (0, 1) : |\psi_+\rangle$
- $(x, y) = (1, 1) : |\psi_-\rangle$

6.1.2 Measuring the Bell Basis

How to know what basis you have?

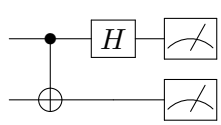

In this circuit:

- $|\phi_+\rangle$ gives $|00\rangle$
- $|\phi_-\rangle$ gives $|10\rangle$
- $|\psi_+\rangle$ gives $|01\rangle$
- $|\psi_-\rangle$ gives $|11\rangle$

6.2 Quantum Teleportation

Initially, Alice has an unknown qubit $a|0\rangle + b|1\rangle$. Alice and Bob share an entangled pair $|00\rangle + |11\rangle$. Ignore normalization factors.

Total state:

$$|\psi_1\rangle = a|000\rangle + b|100\rangle + a|011\rangle + b|111\rangle$$

Alice can "teleport" her qubit to Bob's using the entangled pair:

1. Alice applies CNOT to her entangled pair, using unknown qubit as control.

$$|\psi_2\rangle = a|000\rangle + b|110\rangle + a|011\rangle + b|101\rangle$$

2. Alice applies H to unknown qubit.

$$\begin{aligned}|\psi_3\rangle &= a(|0\rangle + |1\rangle)|00\rangle + b(|0\rangle - |1\rangle)|10\rangle + a(|0\rangle + |1\rangle)|11\rangle + b(|0\rangle - |1\rangle)|01\rangle \\ &= |00\rangle(a|0\rangle + b|1\rangle) + |01\rangle(a|1\rangle + b|0\rangle) + |10\rangle(a|0\rangle - b|1\rangle) + |11\rangle(a|1\rangle - b|0\rangle)\end{aligned}$$

3. Alice measures her qubits and sends to Bob classically (like email).
4. Depending on Alice's measurements, Bob applies some operators to his entangled qubit.
   - If Bob receives $|00\rangle$: his state is $a|0\rangle + b|1\rangle$, apply identity.
   - If Bob receives $|01\rangle$: his state is $a|1\rangle + b|0\rangle$, apply X.
   - If Bob receives $|10\rangle$: his state is $a|0\rangle - b|1\rangle$, apply Z.
   - If Bob receives $|11\rangle$: his state is $a|1\rangle - b|0\rangle$, apply X then Z.

In this way, Bob can recover Alice's qubit $a|0\rangle + b|1\rangle$.

NB: This isn't an instantaneous transmission of information, since Alice needs to send her results to Bob classically.

NB 2: This doesn't violate the no-cloning theorem, since the original qubit state is destroyed when Alice measures it.

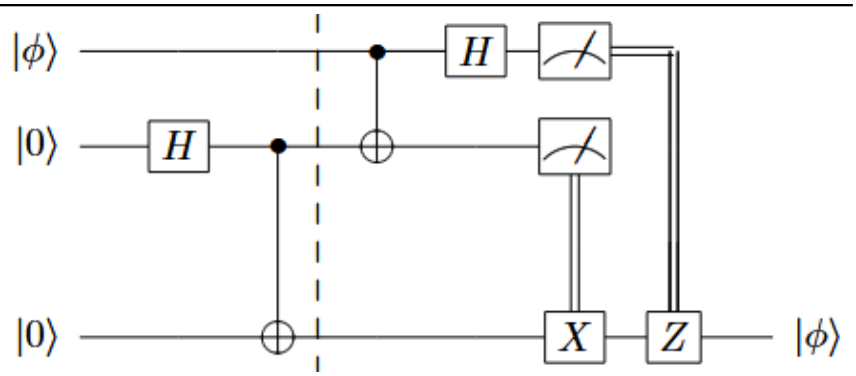

Quantum Teleportation Rail Diagram

Double lines mean classical transmission of bits. In particular, here they mean we apply the gate on the bottom (X or Z) if the measurement is 1.

6.3 Superdense Coding

We can send **2 bits** of information by sending just 1 qubit, if an entangled resource exists.

Say Alice and Bob share an entangled resource $|\phi\rangle = |00\rangle + |11\rangle$. Alice wants to send two bits (i, j) to Bob. She encodes them as:

$$Z^i X^j \otimes 1 \, |\phi\rangle$$

This produces the Bell basis:

- $Z^0 X^0 \otimes 1 \, |\phi\rangle = |00\rangle + |11\rangle$
- $Z^0 X^1 \otimes 1 \, |\phi\rangle = |10\rangle + |01\rangle$
- $Z^1 X^0 \otimes 1 \, |\phi\rangle = |00\rangle - |11\rangle$
- $Z^1 X^1 \otimes 1 \, |\phi\rangle = |01\rangle - |10\rangle$

Bob can then recover the two qubits by applying a CNOT and Hadamard:

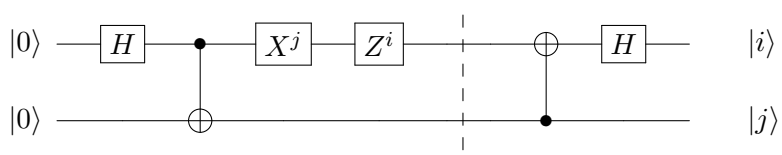

Left of dotted line: entangle qubits, apply X and Z. Right of dotted line: Bob recovers Alice's bits.

6.4 Entanglement Swapping

We can "transfer" entanglement between two sets of qubits to unentangled qubits.

Say Alice and Chuck share $|\Phi_+\rangle$, and Bob and Chuck share a $|\Phi_+\rangle$ (entangled states).

If Chuck does a Bell State measurement on his state, he can make Alice and Bob's qubits become

entangled:

$$
\begin{aligned}
|\Phi_+\rangle_{AC} |\Phi_+\rangle_{CB} &= \frac{1}{2} \left(|00\rangle_{AC} + |11\rangle_{AC}\right) \left(|00\rangle_{CB} + |11\rangle_{CB}\right) \\
&= \frac{1}{2} \left(|0000\rangle + |0011\rangle + |1100\rangle + |1111\rangle\right)_{ACCB}
\end{aligned}
$$

After grouping terms:

$$
\begin{aligned}
&\frac{1}{4} \left[|0\rangle \left(|\Phi_+\rangle + |\Phi_-\rangle\right) |0\rangle + |0\rangle \left(|\Psi_+\rangle + |\Psi_-\rangle\right) |1\rangle + |1\rangle \left(|\Psi_+\rangle - |\Psi_-\rangle\right) |0\rangle + |1\rangle \left(|\Phi_+\rangle - |\Phi_-\rangle\right) |1\rangle\right]_{ACCB} \\
&\quad \frac{1}{4} \left[|\Phi_+\rangle_{CC} \left(|00\rangle + |11\rangle\right)_{AB} + |\Phi_-\rangle \left(|00\rangle - |11\rangle\right) + |\Psi_+\rangle \left(|01\rangle + |10\rangle\right) + |\Psi_-\rangle \left(|01\rangle - |10\rangle\right)\right]
\end{aligned}
$$

Note that Alice and Bob's qubits end up in an entangled Bell state.

6.5 Probabilistic & Quantum Complexity Classes

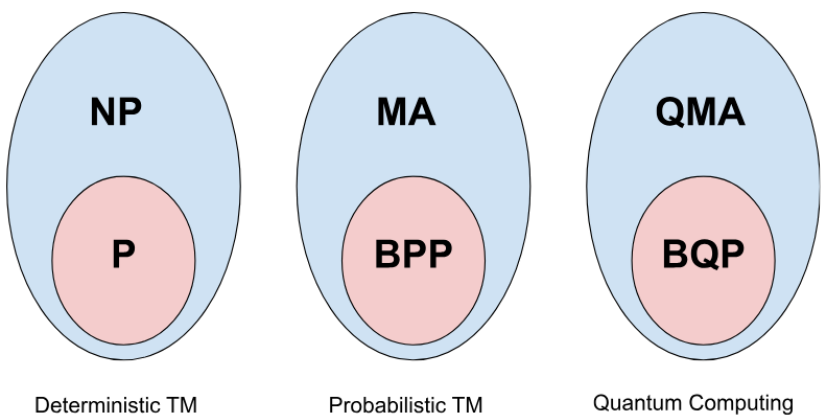

Equivalent of P and NP complexity classes for Probabilistic TMs & Quantum computers, where P is what can be proved and NP is what can be verified (as usual). This is assuming that $P \neq NP$.

Nitty gritty details are below if you're a masochist (or a mathematician). Not too important as long as you get the rough idea.

6.5.1 Probabilistic TMs: *BPP* and *MA*

BPP: Bounded-error Probabilistic Polynomial-Time, analogue of P for a probabilistic TM.

- A language $L \in BPP$ if there exists a probabilistic TM "M" such that:
  1. M runs for polynomial-time on all inputs.
  2. (Completeness) For all $x \in L$, M outputs 1 with probability $\geq 2/3$.
  3. (Soundness) For all $x \notin L$, M outputs 1 with probability $\leq 1/3$.
- Alternative definition with deterministic TMs: A language $L \in BPP$ if there exists a polynomial p and deterministic TM "M" such that:
  1. M runs in polynomial-time for all inputs

2. (Completeness) For all $x \in L$, the fraction of strings y with length $p(|x|)$ which satisfy $M(x, y) = 1$ is $\geq 2/3$.
3. (Soundness) For all $x \notin L$, the fraction of strings y with length $p(|x|)$ which satisfy $M(x, y) = 1$ is $\geq 1/3$.

- The $2/3$ doesn't really matter, as long as it's higher than $1/2$. We can get arbitrarily close to 1 by doing multiple runs.

MA: Merlin-Arthur, analogue of NP for a probabilistic TM.

- A language $L \in MA$ if there exists a deterministic TM "M" and polynomials p, q, such that for for every input string x,
  1. If $x \in L$, then there exists a certificate $z \in \{0,1\}^{q(n)}$ such that $\text{Prob}_{y \in \{0,1\}^{p(n)}}(M(x, y, z) = 1) \geq 2/3$
  2. If $x \notin L$, then for every certificate $z \in \{0,1\}^{q(n)}$, $\text{Prob}_{y \in \{0,1\}^{p(n)}}(M(x, y, z) = 0) \geq 2/3$
- Definitions were pulled from Wikipedia. In a nutshell: certificate exists to verify result with probability $\geq 2/3$.
- The naming: Merlin tries to convince Arthur of the correct answer, but Arthur knows Merlin isn't trustworthy. Merlin supplies a certificate such that the answer can be verified.

6.5.2 Quantum Computing: *BQP* and *QMA*

BQP: Bounded-error Quantum Polynomial-time, equivalent of P for quantum computing.

- A language $L \in BQP$ if there exists a polynomial-time family of circuits $\{Q_n : n \in \mathbb{N}\}$ such that:
  1. For all $n \in \mathbb{N}$, Q_n takes n qubits as input and outputs 1 bit.
  2. (Completeness) For all $x \in L$, $\text{Prob}(Q_{|x|}(x) = 1) \geq 2/3$.
  3. (Soundness) For all $x \notin L$, $\text{Prob}(Q_{|x|}(x) = 0) \geq 2/3$.
- Definitions from Wikipedia. Similar to Probabilistic TMs, but with a quantum circuit.

QMA: Quantum Merlin-Arthur, equivalent of NP for quantum computing.

- A language $L \in$ *QMA* if there exists a polynomial-time quantum verifier V and a polynomial p such that:
  1. For all $x \in L$, there exists a quantum state $|\psi\rangle$ such that the probability of V accepting the input $(|x\rangle, |\psi\rangle)$ is $\geq 2/3$.
  2. For all $x \notin L$, and for all quantum states $|\psi\rangle$ with at most $p(|x|)$ qubits, the probability of V accepting the input $(|x\rangle, |\psi\rangle)$ is $\leq 1/3$.
- Definitions from Wikipedia. The key part is the quantum verifier.

7 Week 7 (Oct 5 – Oct 11)

7.1 Resource Theory

- Classical communication: sending 1 bit $[c \to c]$, sending 2 bits $2[c \to c]$
- Quantum communication: sending 1 qubit $[q \to q]$
- Entangled qubits: $[qq]$
- GHZ state: $[qqq]$

Some results:

- $[q \to q] \geq [c \to c]$: Sending qubits can simulate classical communication.
- $[q \to q] \not\geq 2[c \to c]$: Holveo bound, can only communicate 1 bit of information.
- $[q \to q] \geq [qq]$: Sending qubits can simulate entanglement.
- $[qq] \not\geq [c \to c]$: No-signaling theorem
- $[qq] \not\geq [q \to q]$: No-signaling theorem

Quantum teleportation: $[qq] + 2[c \to c] \geq [q \to q]$

Superdense coding: $[qq] + [q \to q] \geq 2[c \to c]$

7.2 Quantum Computation

7.2.1 Boolean Logic

Given a boolean function $0 \leq f(a) \leq 2^n - 1$, where a is a n-bit string, the goal is to compute $|a\rangle \to U_f |a\rangle = |f(a)\rangle$, where U_f is a unitary gate.

The problem is that most functions aren't injective (one-to-one). E.g. for $f(a) = a \mod 2$,

$$2 = |010\rangle \longrightarrow U_f |010\rangle = |000\rangle$$
$$4 = |100\rangle \longrightarrow U_f |100\rangle = |000\rangle$$

So $\langle f(2)|f(4)\rangle = 1$, but also $\langle f(2)|f(4)\rangle = \langle 010| U_f^\dagger U_f |100\rangle = \langle 010|100\rangle = 0$.

Thus $U_f |a\rangle \neq |f(a)\rangle$.

To resolve this (by making U_f reversible), use an ancilla qubit to set

$$|a\rangle \otimes |b\rangle \longrightarrow U_f |a\rangle \otimes |b\rangle = |a\rangle \otimes |b \oplus f(a)\rangle$$

This ensures that outputs are reversible.

7.2.2 Oracles

An oracle is a unitary gate like above:

- Unknown function f, but we can "query" it.
- Efficiency of oracle isn't considered
- For QC: $O_f |a\rangle = |a \oplus f(a)\rangle$

1. Any quantum algorithm for a problem gives a lower bound on complexity.
   - The query to oracle is minimum 1 step in the algorithm.
   - If the quantum algorithm can't be done efficiently with an oracle, it can't be done efficiently in general.
2. Relativized speedups: We can prove fast quantum algorithms relative to an oracle.
3. If we can instantiate an oracle in polynomial space w.r.t input n, then that proves there's a quantum speedup.

In a nutshell, if a quantum algorithm seems faster than its classical counterpart with an oracle, *maybe* there's a quantum speedup. But it depends on the oracle.

7.3 Deutsch's Algorithm

Kind of a toy algorithm, but shows a quantum algorithm faster than its classical counterpart.

Given: 1 input bit, boolean function f (our oracle)

Goal: determine if f is constant or balanced in the least number of queries.

- Constant: always give same output, e.g. $f(0) = f(1) = 0$ or $f(0) = f(1) = 1$.
- Balanced: give different outputs, e.g. $f(0) = 0$ and $f(1) = 1$, or $f(0) = 1$ and $f(1) = 0$

Classically, we need 2 queries. A quantum algorithm needs 1.

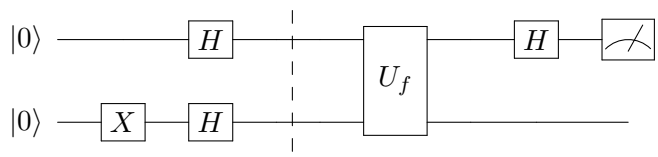

Before the dotted line, we're generating the state $|\psi\rangle = |x\rangle\,|y\rangle = (|0\rangle + |1\rangle)(|0\rangle - |1\rangle)/2$. Our oracle is $U_f\,|x\rangle\,|y\rangle = |x\rangle\,|y \oplus f(x)\rangle$.

Calculating the effect of U_f and ignoring normalization,

$$\begin{aligned}
U_f\,|\psi\rangle &= U_f\,|0\rangle\,(|0\rangle - |1\rangle) + U_f\,|1\rangle\,(|0\rangle - |1\rangle) \\
&= |0\rangle\Big(|0 \oplus f(0)\rangle - |1 \oplus f(0)\rangle\Big) + |1\rangle\Big(|0 \oplus f(1)\rangle - |1 \oplus f(1)\rangle\Big) \\
&= (-1)^{f(0)}\,|0\rangle\,(|0\rangle - |1\rangle) + (-1)^{f(1)}\,|1\rangle\,(|0\rangle - |1\rangle) \\
&= \Big[(-1)^{f(0)}\,|0\rangle + (-1)^{f(1)}\,|1\rangle\Big](|0\rangle - |1\rangle)
\end{aligned}$$

If f is constant: $U_f\,|\psi\rangle = \pm(|0\rangle + |1\rangle)(|0\rangle - |1\rangle)$.

If f is balanced: $U_f\,|\psi\rangle = \pm(|0\rangle - |1\rangle)(|0\rangle - |1\rangle)$.

If we apply the Hadamard on the first qubit,

$$(H \otimes 1)U_f\,|\psi\rangle = \pm\,|z\rangle\,(|0\rangle - |1\rangle)$$

$z = 0$ if constant, $z = 1$ if balanced. So measuring the first qubit determines whether it's constant or balanced, in just 1 oracle query.

7.4 More Gate Identities

Application of two Hadamards is the identity ($H^2 = I$)

Controlled Z gate can be flipped. Doing the casework, the only change occurs when $|11\rangle \longrightarrow -\,|11\rangle$, and symmetry.

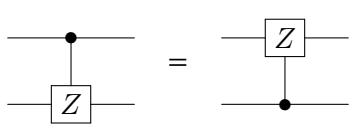

Surrounding a CNOT with Hadamards flips the CNOT. This can be proved with the previous identity & the fact that $HXH = Z$, $HZH = X$.

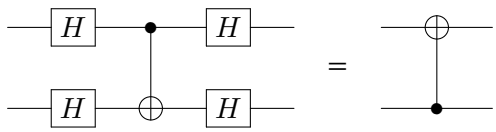

8 Week 8 (Oct 12 – Oct 18)

8.1 Deutsch-Jozsa Algorithm

An extension of Deutsch's algorithm with n input bits and appropriate ancillas.

Same problem as before: given a function f that's either constant (all same output) or balanced (half 0, half 1 output), in how many queries can we tell? But now with n bit inputs.

- Classically: best 2 queries, worst $2^{n-1} + 1$ queries.
- Quantum: 1 query

Circuit is just Deutsch's algorithm except with n-bit Hadamards:

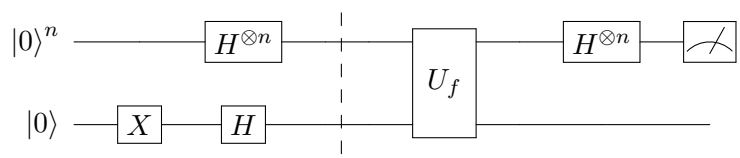

By the dashed line, our state is

$$|\psi_{in}\rangle = \frac{1}{2^{(n+1)/2}} \sum_{x \in \{0,1\}^n} |x\rangle \Big(|0\rangle - |1\rangle \Big)$$

Applying the oracle,

$$U_f |x\rangle |y\rangle = |x\rangle |y \oplus f(x)\rangle$$
$$U_f |\psi_{in}\rangle = \frac{1}{2^{(n+1)/2}} \sum_x (-1)^{f(x)} |x\rangle \Big(|0\rangle - |1\rangle \Big)$$

The -1 factor is a phase kickback, see Deutsch's algorithm section for more.

Now recall the action of the Hadamard:

$$\text{1 qubit:} \quad H|x\rangle = \frac{1}{\sqrt{2}} \sum_z (-1)^{xz} |z\rangle$$
$$\text{multiple qubits:} \quad H^{\otimes n}|x\rangle = \frac{1}{2^{n/2}} \sum_z (-1)^{x \cdot z} |z\rangle, x \cdot z = x_1 z_1 + x_2 z_2 + ... + x_n z_n$$
$$\text{on our state:} \quad \Big(H^{\otimes n} \otimes 1\Big)\Big[U_f |\psi_{in}\rangle\Big] = \frac{1}{2^n} \sum_x \sum_z (-1)^{x \cdot z + f(x)} |z\rangle \Big(|0\rangle - |1\rangle \Big)$$

Measure the first term of the sum, $|0\rangle^{\otimes n}$, where $z = 0$. It has amplitude $\sum_x \frac{(-1)^{f(x)}}{2^n}$.

- If f is constant: $\sum_x \frac{(-1)^{f(x)}}{2^n} = (-1)^f \sum_x \frac{1}{2^n} = (-1)^f$. State is normalized, therefore $|0\rangle^{\otimes n}$ is the only term.
- If f is balanced: $\sum_x \frac{(-1)^{f(x)}}{2^n} = 0$, equal number of +1s and -1s. So $|0\rangle^{\otimes n}$ doesn't appear.

8.2 3SAT with a Quantum Circuit

The 3SAT problem: Given a CNF boolean function with clauses containing 3 literals, does there exist a satisfying assignment?

CNF = conjunctive normal form, OR inside parentheses and AND outside

e.g. $\Phi = \Big(x_1 \vee x_2 \vee \neg x_3\Big) \wedge \Big(\neg x_1 \vee \neg x_2 \vee x_4\Big) \wedge \Big(x_2 \vee \neg x_4 \vee x_3\Big)$

8.2.1 Implementation of AND and OR

Easy enough, based on the Toffoli gate.

The OR circuit:

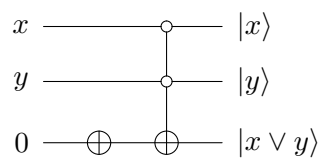

The AND circuit:

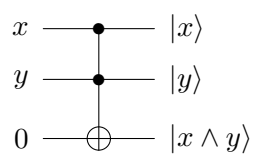

8.2.2 Combined Circuit

To make a circuit for the 3SAT, we "stack" the appropriate circuits, get each parentheses' result in an ancilla, and peform a CNOT on all those ancillas.

Here's an example for $\Big(x_1 \vee \neg x_2 \vee \neg x_3\Big) \wedge \Big(\neg x_4 \vee x_5 \vee \neg x_6\Big)$:

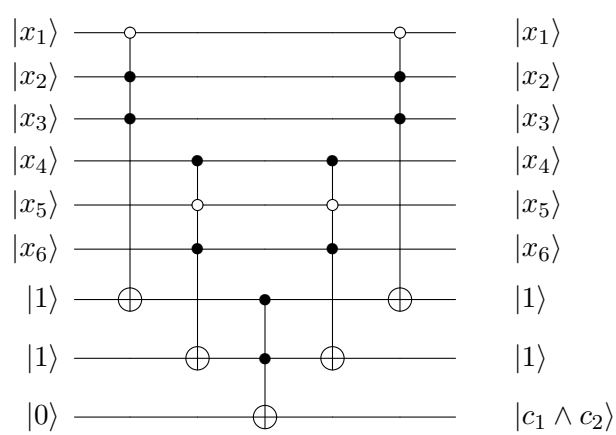

These control gates mix both open circles and closed ones. But they're easy to implement by adding a X gate appropriately. Note that we "retrace" our steps and uncompute the work register, because we don't want to mess with that.

8.3 Bernstein-Vazirani Algorithm

Given a function $f(x)$ that evaluates the mod-2 inner product, $f(x) = a \cdot x = a_0x_0 \oplus a_1x_1 \oplus ... \oplus a_nx_n$

What's the least amount of calls to the oracle that we need to determine a?

- Classically: n queries. Quantum: 1 query.
- The oracle, as always, is $U_f \left|x\right\rangle \left|y\right\rangle = \left|x\right\rangle \left|y \oplus f(x)\right\rangle$

Circuit diagram:

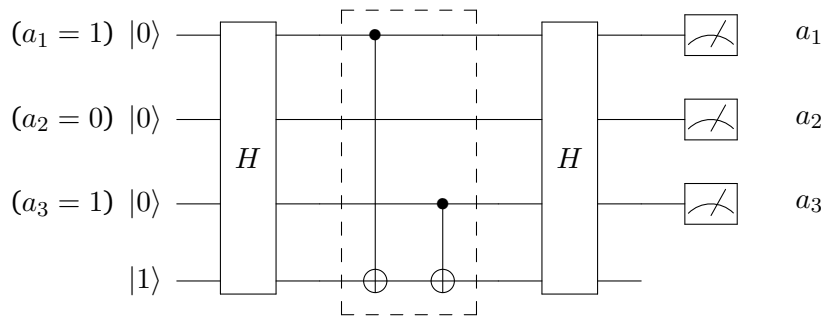

This is an example with $a = 5 = 101_2$. The dashed section is the oracle. A CNOT is applied to the ancilla if the corresponding bit is 1.

We Hadamard all initial $|0\rangle$ qubits, query the oracle, un-Hadamard, and measure. Why does this work?

8.3.1 Mathematics

After Hadamarding, our input to the oracle is

$$\left|\psi_{in}\right\rangle = H^{\otimes n} \left|0\right\rangle^n H \left|1\right\rangle = \frac{1}{2^{(n+1)/2}} \sum_x \left|x\right\rangle^n \left(\left|0\right\rangle - \left|1\right\rangle \right)$$

We apply the phase kickback from the oracle. The $\left(\left|0\right\rangle - \left|1\right\rangle \right)$ is flipped if the control qubit is 1:

$$U_f \left|\psi_{in}\right\rangle = \frac{1}{2^{(n+1)/2}} \sum_x (-1)^{f(x)} \left|x\right\rangle^n \left(\left|0\right\rangle - \left|1\right\rangle \right)$$

Now we apply the Hadamard again on all qubits:

$$\begin{aligned} H^{\otimes n+1} U_f \left|\psi_{in}\right\rangle &= \frac{1}{2^n} \sum_{x=0}^{2^n-1} (-1)^{f(x)} \Big(\sum_{y=0}^{2^n-1} (-1)^{x \cdot y} \left|y\right\rangle \Big) \Big(\left|1\right\rangle \Big) \\ &= \frac{1}{2^n} \sum_{x=0}^{2^n-1} \sum_{y=0}^{2^n-1} (-1)^{f(x)+x \cdot y} \left|y\right\rangle \left|1\right\rangle \\ &= \frac{1}{2^n} \sum_{x=0}^{2^n-1} \sum_{y=0}^{2^n-1} (-1)^{(a+y) \cdot x} \left|y\right\rangle \left|1\right\rangle \end{aligned}$$

Focus on the sum over x:

$$\sum_{x=0}^{2^n-1}(-1)^{(a+y)\cdot x} = \prod_{j=0}^{n-1}\sum_{x_j=0}^{1}(-1)^{(a_j+y_j)x_j} = \prod_{j=0}^{n-1}\left(1+(-1)^{a_j+y_j}\right)$$

If $a_j \neq y_j$ at any point, the product vanishes. The only surviving output is $|a\rangle^n|1\rangle$. So we've identified a in 1 query to the oracle.

8.3.2 Gate Identities

There's an easier way to see why this works. Recall the circuit identity:

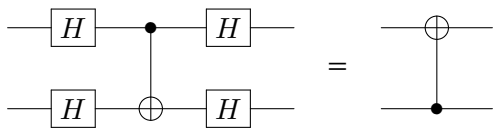

Now imagine adding $H^2 = I$ in some parts of our original circuit. All Hadamards written out for clarity:

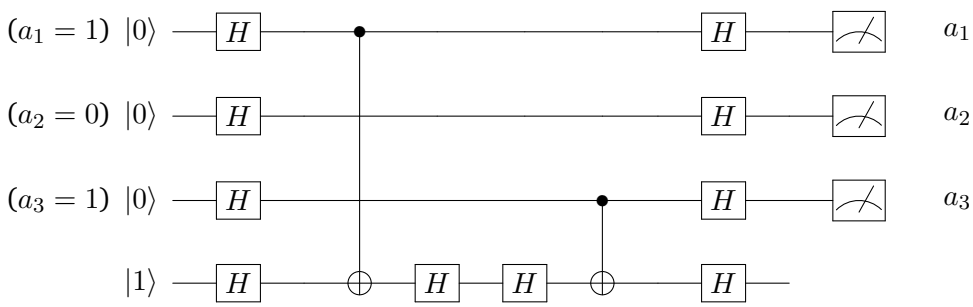

After grouping appropriately, we can see that the circuit is equivalent to

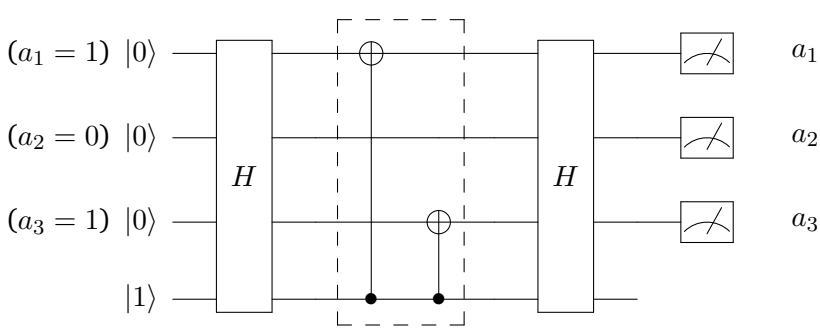

Since the bottom qubit is $|1\rangle$, the CNOT is applied on all qubits where the bit in a is 1. So obviously, a is reconstructed on the first 3 qubits.

8.4 Pure vs. Mixed States

Pure state: If the state of the system can be represented as a ket vector

- E.g. A beam of photons, all in $|+\rangle$, measured in HV basis

Mixed state: If the state of the quantum system is not precisely known, but has probabilities in a number of quantum states

- E.g. A machine emitting photons in either $|H\rangle$ or $|V\rangle$, measured in HV basis.
- The measurement is the same as with a pure state, but different fundamentally.

8.5 Density Matrices

A density matrix (represented with ρ) is useful to tell pure and mixed states apart.

For pure states, $\rho = |\psi\rangle \langle\psi|$

- E.g. $\rho_H = \begin{pmatrix} 1 & 0 \\ 0 & 0 \end{pmatrix}$, $\rho_+ = \frac{1}{2}\begin{pmatrix} 1 & 1 \\ 1 & 1 \end{pmatrix}$

For mixed states, add density matrices.

- E.g. With the machine example, $\rho = \rho_H + \rho_V = \frac{1}{2}\begin{pmatrix} 1 & 0 \\ 0 & 1 \end{pmatrix} \neq \rho_+$

8.5.1 Properties

- Hermitian: $\rho = \rho^\dagger$
- Unit trace: $\text{Tr}(\rho) = 1$
- If **pure state**:
  - Idempotent, $\rho^2 = \rho$
  - $\text{Tr}(\rho^2) = 1$
- If **mixed state**:
  - Not idempotent, $\rho^2 \neq \rho$
  - $\text{Tr}(\rho^2) \neq 1$

*Mixed states have density matrices that are diagonal with more than 1 entry, summing to 1.

*A "maximally mixed" state has no off-diagonal elements: $\rho_{ij} = 0, \forall i \neq j$

8.5.2 QM with Density Matrices

Some familiar QM concepts can be expressed in terms of density matrices:

- Born probability rule: $P(\text{outcome } \omega_i \text{ in state } \psi) = \text{Tr}(\Pi_i \rho)$, where $\Pi_i = |\omega_i\rangle \langle\omega_i|$ is the projector.
- Expectation value of an observable: $E(\Omega) = \langle\Omega\rangle_\psi = \text{Tr}(\Omega\rho)$
- Time evolution: $\rho' = U\rho U^\dagger$, where $|\psi'\rangle = U|\psi\rangle$.
  - Since $\rho' = |\psi'\rangle \langle\psi'| = U|\psi\rangle \langle\psi'| U^\dagger$

9 Week 9 (Oct 19 – Oct 25)

9.1 Partial Trace

Remember all the tracing we did with density matrices? Tracing over a system is practically impossible, but we can trace over a portion of it.

Consider a Φ_+ state shared by Alice and Bob. To examine Alice's marginal probabilities, we "sum over" Bob's system, since we're not concerned with it.

$$p(x_i y_j \text{ in } \Phi_+) = \left| \langle x_i y_j | \Phi_+ \rangle \right|^2 = \langle x_i | \langle y_j | \rho_{AB} | y_j \rangle | x_i \rangle$$

ρ_{AB} is the density matrix of the system. To "sum over" Bob's system,

$$p(x_i \text{ in } \rho_A) = \sum_{y=0}^{1} \langle x_i | \langle y | \rho_{AB} | y \rangle | x_i \rangle = \langle x_i | \rho_A | x_i \rangle$$

ρ_A is the "reduced density matrix" for A, and y is Bob's qubit.

$$\rho_A = \sum_{y=0}^{1} \langle y | \rho_{AB} | y \rangle$$

9.1.1 Example

With explicit numbers, the density matrix for Φ_+ is:

$$\Phi_+ = \rho_{AB} = \frac{1}{2} \begin{pmatrix} 1 & 0 & 0 & 1 \\ 0 & 0 & 0 & 0 \\ 0 & 0 & 0 & 0 \\ 1 & 0 & 0 & 1 \end{pmatrix} = \frac{1}{2} \Big[|00\rangle \langle 00| + |00\rangle \langle 11| + |11\rangle \langle 00| + |11\rangle \langle 11| \Big]$$

Now we find the reduced density matrix ρ_A:

$$\begin{aligned} \rho_A &= \sum_y \langle y | \rho_{AB} | y \rangle \\ &= \frac{1}{2} \langle 0 | \Big[|00\rangle \langle 00| + |00\rangle \langle 11| + |11\rangle \langle 00| + |11\rangle \langle 11| \Big] |0\rangle + \\ &\quad \frac{1}{2} \langle 1 | \Big[|00\rangle \langle 00| + |00\rangle \langle 11| + |11\rangle \langle 00| + |11\rangle \langle 11| \Big] |1\rangle \\ &= \frac{1}{2} \Big[|0\rangle \langle 0| + |1\rangle \langle 1| \Big] \end{aligned}$$

Note that this is a maximally mixed state — proportional to the identity matrix, with no cross terms. No quantum information (phases) remain. It's classically correlated now.

9.1.2 Implications & Uses

1. Tracing over half an entangled state yields a maximally mixed state. In a classically correlated system, if you know the whole system, you know its subparts. Here, you have knowledge of the quantum state (Φ_+) of the whole system, but when you consider a subsystem, you no longer have complete knowledge.

- "The sum is not equal to the sum of the parts"
- Another way quantum mechanics works differently than classical.

2. (Can skip) What if you throw one half of entangled pair into a black hole? How to represent state of qubit not thrown in — do a partial trace over black hole system. If what goes into a black hole is irretrievable, the initial quantum information is lost forever (per Hawking)
   - But that's a physical process where a pure state transitions into a mixed state, breaking quantum mechanics (this is only allowed for measurements, not unitary processes).
   - Perhaps somehow, quantum information is preserved on horizon of black hole...

9.2 Decoherence

The biggest enemy of quantum computation: Random interactions with the environment can change our quantum state.

We can't possibly measure our environment completely, so our only option is to partially trace over it.

But this eliminates a lot of coherence within the system, e.g. entanglement. We lose quantum information: the state "decoheres," acting like a mixed state, not a pure one.

We want a long decoherence time in order to squeeze out as many operations as possible before the system decoheres. Let τ_Q be the decoherence time and τ_{op} be the time for 1 operation. Then the max number of operations we can do is $n_{op} = \tau_Q/\tau_{op}$.

9.3 Simon's Algorithm

Consider $f(x)$ such that for 2 input bitstrings x and y, $f(x) = f(y)$ if $x \oplus y = a$, where a is some positive integer less than 2^n.

We see that $f(x) = f(x \oplus a)$, so a is the period of f.

Our goal is to determine a in a small number of oracle calls.

- Classically: at least $2^{n/2}$ calls to get a *favorable* probability of finding a.
- Quantum: n calls to oracle to determine a, plus n^2 classical steps.

Circuit diagram (for $n = 3$):

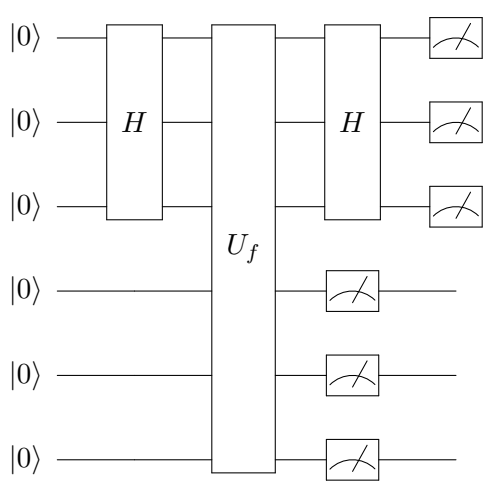

The top 3 qubits are the input, and the bottom 3 are ancillas. We Hadamard the inputs, send them through the oracle, and now the key step is the *measurement process*.

9.3.1 Example

After Hadamarding, our state is

$$|\psi\rangle_1 = \frac{1}{2^{n/2}} \sum_{x=0}^{2^n-1} |x\rangle_n |0\rangle_n$$

Then we send through the oracle, which as always is $U_f |x\rangle |y\rangle = |x\rangle |y \oplus f(x)\rangle$.

$$|\psi\rangle_2 = \frac{1}{2^{n/2}} \sum_{x=0}^{2^n-1} |x\rangle_n |f(x)\rangle_n$$

Now we measure the bottom register, which collapses the state. There are two inputs (x and $x \oplus a$) for every output $f(x)$, so the result of the measurement is a superposition of those states.

$$|\psi\rangle_3 = \frac{1}{\sqrt{2}} \Big(|x\rangle_n + |x \oplus a\rangle_n \Big)$$

Now we do the Hadamard on the top register ($|\psi_5\rangle$). Phase kickback is used for the Hadamard, as usual.

$$\begin{aligned} |\psi\rangle_4 &= \frac{1}{\sqrt{2}} \cdot \frac{1}{2^{n/2}} \sum_{y=0}^{2^n-1} \Big[(-1)^{x \cdot y} + (-1)^{(x \,\oplus\, a) \cdot y} \Big] |y\rangle_n \\ &= \frac{1}{2^{\frac{n+1}{2}}} \sum_{y=0}^{2^n-1} (-1)^{x \cdot y} \Big[1 + (-1)^{a \cdot y} \Big] |y\rangle_n \end{aligned}$$

Now if we measure, only the terms such that $a \cdot y = 0$ survive: $\sum_{i=0}^{n-1} a_i y_i = 0 \mod 2$. So by measuring the input, we learn some random value y such that $a \cdot y = 0$.

By repeating this process n times, discarding repeat inputs and the $|0\rangle_n$ input case, we can learn enough about a to deduce it with Gaussian elimination. That can be done classically in n^2 steps.

10 Week 10 (Oct 26 – Nov 1)

10.1 Fourier Analysis

10.1.1 Vector Spaces

Previously, we looked at orthonormal vector spaces:

$$\begin{gathered} \langle i|j\rangle = 0 \quad \text{(if } i \neq j\text{)} \\ \langle i|i\rangle = 1 \\ \langle i|j\rangle = \delta_{ij} \quad \text{(Kronecker delta)} \end{gathered}$$

Any vector in the space can be expressed as a linear combination of those basis vectors:

$$|V\rangle = a_1 |1\rangle + a_2 |2\rangle + ... + a_n |n\rangle$$

To find a specific component, we perform the inner product (all irrelevant terms become 0):

$$\langle 27|V\rangle = \langle 27| a_{27} |27\rangle = a_{27}$$

10.1.2 Function Spaces

Now we consider an orthonormal basis of functions, not vectors.

We define the basis functions for the circle S^1 as:

$$f_n(\theta) = \frac{1}{\sqrt{2\pi}} e^{in\theta} \quad n = 0, \pm 1, \pm 2, ...$$

The inner product is defined as:

$$\langle f|g\rangle = \int_0^{2\pi} f^* g \; d\theta$$

It can be seen that this basis is orthonormal.

- The basis is normalized: $\langle f_n|f_n\rangle = \frac{1}{2\pi}\int_0^{2\pi} e^{-in\theta}e^{in\theta} = 1$
- The basis is orthogonal: $\langle f_n|f_m\rangle = \frac{1}{2\pi}\int_0^{2\pi} e^{i(m-n)\theta} = 0$
- The basis is complete. We can use an infinite sum to represent all members in the function space: $|f\rangle = \frac{1}{\sqrt{2\pi}}\sum_{j=-\infty}^{+\infty} a_j e^{ij\theta}$

To find the components, we do the same inner product business:

$$a_{27} = \langle 27|f\rangle = \frac{1}{\sqrt{2\pi}}\int_0^{2\pi} e^{-27i\theta} f(\theta) \; d\theta$$

Note: Be careful about sums vs. integrals.

- The inner product is defined as an **integral**.
- The element of the function space is a **sum** of the basis functions, but when performing the inner product, most of the irrelevant terms become 0.

10.1.3 Fourier Analysis

Now consider a space of functions over the periodic line $-\pi \leq x \leq +\pi$. Disregard the imaginary numbers, and let

$$|n\rangle = \cos(nx) + \sin(nx)$$

$$f(x) = \frac{a_0}{2} + \sum_{n=1}^{\infty}\Big[a_n \cos(nx) + b_n \sin(nx)\Big]$$

Expansion coefficients are found with the inner product, as before:

$$a_n = \frac{1}{\pi}\int_{-\pi}^{\pi} f(x)\cos(nx) \; dx$$

$$b_n = \frac{1}{\pi}\int_{-\pi}^{\pi} f(x)\sin(nx) \; dx$$

As a solid example, consider the piecewise function $f(x) = -1$ for $-\pi < x < 0$, and $f(x) = +1$ for $0 < x < \pi$. By finding the expansion coefficients, we get

$$a_n = \frac{1}{\pi}\int_{-\pi}^{0}(-1)\cos(nx)\,dx + \frac{1}{\pi}\int_{0}^{\pi}\cos(nx)\,dx = 0$$
$$b_n = \frac{1}{\pi}\int_{-\pi}^{0}(-1)\sin(nx)\,dx + \frac{1}{\pi}\int_{0}^{\pi}\sin(nx)\,dx = \frac{2}{n\pi}\left(1-\cos(n\pi)\right)$$

We get that $f(x) = \frac{\pi}{4}\left(\sin(x) + \frac{\sin(3x)}{3} + \frac{\sin(5x)}{5} + ...\right)$, which models the piecewise function quite well.

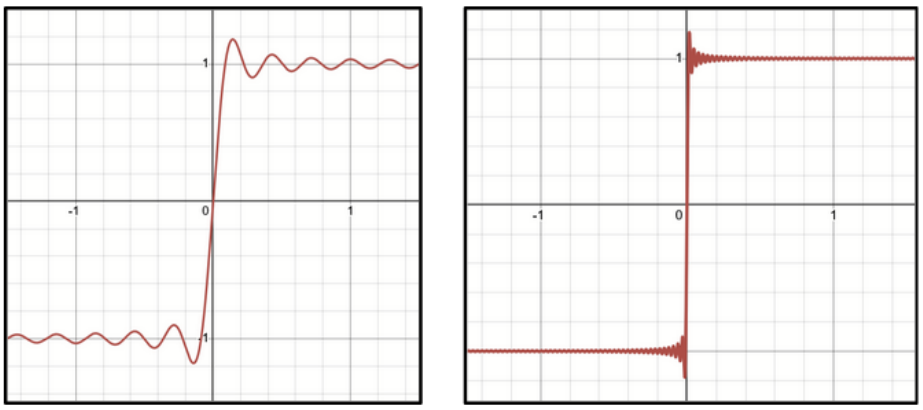

Left: 10 terms. Right: 100 terms.

10.2 Fourier Transform

10.2.1 Introduction

Great, so we have our function to model the general element in the function space:

$$f_n(\theta) = \frac{1}{\sqrt{2\pi}}\sum_{n=-\infty}^{+\infty} a_n e^{in\theta}$$

Now map the function onto a line of length L. We transform $x = \frac{\theta L}{2\pi}$. The coefficients are found with the inner product, as usual.

$$f(x) = \frac{1}{\sqrt{L}}\sum_{n=0}^{\infty} a_n e^{2\pi i \frac{nx}{L}}$$
$$a_n = \langle n|f\rangle = \frac{1}{\sqrt{L}}\int_0^L f(x)e^{-2\pi i\frac{nx}{L}}$$

10.2.2 Discrete Fourier Transform

Okay, now we discretize $x \to k$ and label $L \to N$. All the better to move to Quantum Fourier Transform (QFT), since things are discrete there.

Remember, F_k is the function, f_n are the coefficients:

$$F_k = \frac{1}{\sqrt{N}} \sum_{n=0}^{N-1} f_n e^{2\pi i \frac{kn}{N}}$$
$$f_n = \frac{1}{\sqrt{N}} \sum_{k=0}^{N-1} F_k e^{-2\pi i \frac{kn}{N}}$$

Define $\omega_N = e^{i\frac{2\pi}{N}}$ as the N-th root of unity. Then we have

$$F_k = \frac{1}{\sqrt{N}} \sum_{n=0}^{N-1} f_n \omega_N^{n \cdot k}, \quad n \cdot k \text{ is mod } N$$

We can express this as a matrix operating on a vector:

$$|F\rangle = \frac{1}{\sqrt{N}} \begin{pmatrix} \omega^{0\cdot 0} & \omega^{0\cdot 1} & \omega^{0\cdot 2} & \dots & \omega^{0\cdot(N-1)} \\ \omega^{1\cdot 0} & \omega^{1\cdot 1} & \omega^{1\cdot 2} & \dots & \omega^{1\cdot(N-1)} \\ \omega^{2\cdot 0} & \omega^{2\cdot 1} & \omega^{2\cdot 2} & \dots & \omega^{2\cdot(N-1)} \\ \vdots & \vdots & \vdots & & \vdots \\ \omega^{(N-1)\cdot 0} & \omega^{(N-1)\cdot 1} & \omega^{(N-1)\cdot 2} & \dots & \omega^{(N-1)\cdot(N-1)} \end{pmatrix} \begin{pmatrix} f_0 \\ f_1 \\ f_2 \\ \vdots \\ f_{n-1} \end{pmatrix}$$

Since the dot product is taken mod N, it can be simplified to

$$\begin{aligned} |F\rangle &= \frac{1}{\sqrt{N}} \begin{pmatrix} 1 & 1 & 1 & \dots & 1 \\ 1 & \omega & \omega^2 & \dots & \omega^{N-1} \\ 1 & \omega^2 & \omega^4 & \dots & \omega^{N-2} \\ \vdots & \vdots & \vdots & & \vdots \\ 1 & \omega^{N-1} & \omega^{N-2} & \dots & \omega \end{pmatrix} \begin{pmatrix} f_0 \\ f_1 \\ f_2 \\ \vdots \\ f_{n-1} \end{pmatrix} \\ &\equiv U_{FT} |f\rangle \end{aligned}$$

We define the previous matrix U_{FT} as the Quantum Fourier Transform (QFT). It'll be useful later on. The gate can be written compactly as

$$U_{FT} = \frac{1}{2^{n/2}} \sum_{j=0}^{2^n-1} \sum_{k=0}^{2^n-1} e^{2\pi i \frac{kj}{2^n}} |k\rangle \langle j|$$

Note that for the $N = 2$ case, $\omega_2 = e^{i\frac{2\pi}{2}} = -1$. So

$$U_{FT} = \frac{1}{\sqrt{2}} \begin{pmatrix} 1 & 1 \\ 1 & \omega \end{pmatrix} = \frac{1}{\sqrt{2}} \begin{pmatrix} 1 & 1 \\ 1 & -1 \end{pmatrix}$$

Which is the Hadamard.

11 Week 11 (Nov 2 – Nov 8)

11.1 Fourier Transform Basis

Recall that the Hadamard register creates all bitstrings of length n:

$$\frac{1}{2^{n/2}}\Big[\sum_{i_0=0}^{1}|i_0\rangle \otimes \sum_{i_1=0}^{1}|i_1\rangle \otimes ... \otimes \sum_{i_{n-1}=0}^{1}|i_{n-1}\rangle\Big]$$

This is in terms of bits. In the **computational number basis**, we express it in terms of natural numbers:

$$\frac{1}{2^{n/2}}\sum_{x=0}^{2^n-1}|x\rangle = \frac{1}{2^{n/2}}\Big(|0\rangle + |1\rangle + |2\rangle + ... + |2^n-1\rangle\Big)$$

The Fourier Transform basis is similar, using natural numbers inside kets. It's marked with a $\sim$ and defined as

$$\begin{aligned}|\tilde{j}\rangle &= \frac{1}{2^{n/2}}\sum_{k=0}^{2^n-1} e^{2\pi i\frac{j\cdot k}{2^n}}|k\rangle \\ &= \frac{1}{\sqrt{N}}\sum_{k=0}^{2^n-1}\omega^{j\cdot k}|k\rangle\end{aligned}$$

where $N = 2^n$ is the number of terms, and $\omega = e^{i\frac{2\pi}{N}}$.

As a concrete example, $|\tilde{4}\rangle$ is defined as

$$|\tilde{4}\rangle = \frac{1}{\sqrt{N}}\sum_{k=0}^{2^n-1}\omega^{4k}|k\rangle$$

Note that this is the 4th column of the QFT gate U_{FT} (assuming we count from 0). In fact, U_{FT} can be defined as

$$U_{FT} = \Big(|\tilde{0}\rangle \quad |\tilde{1}\rangle \quad |\tilde{2}\rangle \quad ... \quad |N\tilde{-}1\rangle\Big)$$

11.2 More with the QFT Gate

From the previous representation of U_{FT}, now imagine that operating on a computational basis vector $|x\rangle$. For simplicity, let there be $n = 3$ bits, and $N = 2^3 = 8$ terms. The quantum fourier transform of $|x\rangle$ becomes

$$\begin{aligned}U_{FT}|x\rangle &= \frac{1}{\sqrt{8}}\sum_{k=0}^{7} e^{i\frac{2\pi}{8}x\cdot k}|k\rangle \\ &= \frac{1}{\sqrt{8}}\Big[|0\rangle + e^{i\frac{\pi}{4}x}|1\rangle + e^{i\frac{2\pi}{4}x}|2\rangle + e^{i\frac{3\pi}{4}x}|3\rangle + ... + e^{i\frac{7\pi}{4}x}|7\rangle\Big]\end{aligned}$$

Now express this in the computational basis (binary):

$$\frac{1}{\sqrt{8}}\Big[|000\rangle + e^{i\frac{\pi}{4}x}|001\rangle + e^{i\frac{2\pi}{4}x}|010\rangle + e^{i\frac{3\pi}{4}x}|011\rangle + e^{i\frac{4\pi}{4}x}|100\rangle + e^{i\frac{5\pi}{4}x}|101\rangle + e^{i\frac{6\pi}{4}x}|110\rangle + e^{i\frac{7\pi}{4}x}|111\rangle\Big]$$

By grouping terms and focusing on those with one $|1\rangle$ in it, we can factor this as

$$\frac{1}{\sqrt{8}}\Big(|0\rangle + e^{i\pi x}|1\rangle\Big) \otimes \Big(|0\rangle + e^{i\frac{\pi}{2}x}|1\rangle\Big) \otimes \Big(|0\rangle + e^{i\frac{\pi}{4}x}|1\rangle\Big)$$

In fact, the general QFT for n qubits can be factored like this, with $|x\rangle$ in the computational number basis:

$$\begin{aligned} U_{FT}|x\rangle &= \frac{1}{\sqrt{N}}\sum_{k=0}^{2^n-1} e^{2\pi i\frac{x\cdot k}{N}}|k\rangle \\ &= \frac{1}{\sqrt{N}}\Big(|0\rangle + e^{2\pi i\frac{x}{2}}|1\rangle\Big) \otimes \Big(|0\rangle + e^{2\pi i\frac{x}{4}}|1\rangle\Big) \otimes ... \otimes \Big(|0\rangle + e^{2\pi i\frac{x}{2^n}}|1\rangle\Big) \end{aligned}$$

In the computational basis (with $x = 2^{n-1}x_{n-1} + 2^{n-2}x_{n-2} + ... + 2x_1 + x_0$), we just plug that in and simplify with $e^{2\pi i} = 1$.

$$\begin{aligned} U_{FT}|x\rangle &= \frac{1}{\sqrt{N}}\sum_{k=0}^{2^n-1} e^{2\pi i\frac{x\cdot k}{N}}|k\rangle \\ &= \frac{1}{\sqrt{N}}\Big(|0\rangle + e^{i\pi x_0}|1\rangle\Big) \otimes \Big(|0\rangle + e^{i\pi x_1}e^{i\pi\frac{x_0}{2}}|1\rangle\Big) \otimes \Big(|0\rangle + e^{i\pi x_2}e^{i\pi\frac{x_1}{2}}e^{i\pi\frac{x_0}{4}}|1\rangle\Big) \otimes ... \end{aligned}$$

12 Week 12 (Nov 9 – Nov 15)

12.1 QFT Circuit

Recall the gates:

- $Z = \begin{pmatrix} 1 & 0 \\ 0 & -1 \end{pmatrix}$, phase shift by π
- $S = \sqrt{Z} = \begin{pmatrix} 1 & 0 \\ 0 & e^{i\pi/2} \end{pmatrix}$: phase shift by $\frac{\pi}{2}$
- $T = \sqrt{S} = \begin{pmatrix} 1 & 0 \\ 0 & e^{i\pi/4} \end{pmatrix}$: phase shift by $\frac{\pi}{4}$

Now back to the U_{FT} gate. For $n = 2$ bits, we have

$$U_{FT}|x\rangle = \frac{1}{2}\underbrace{\Big(|0\rangle + e^{i\pi x_0}|1\rangle\Big)}_{|\tilde{x_1}\rangle} \otimes \underbrace{\Big(|0\rangle + e^{i\pi x_1}e^{i\pi\frac{x_0}{2}}|1\rangle\Big)}_{|\tilde{x_0}\rangle}$$

Note that the first parentheses is $|\tilde{x_1}\rangle$, but it depends on x_0. The second parentheses is $|\tilde{x_0}\rangle$, but also depends on x_1. To make the circuit easier, we can reverse the order of the input bits.

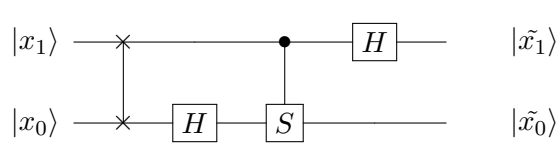

For $n = 3$, the circuit is very similar.

$$U_{FT}\,|x\rangle = \frac{1}{2}\underbrace{\Big(\,|0\rangle + e^{i\pi x_0}\,|1\rangle\Big)}_{|\tilde{x_2}\rangle} \otimes \underbrace{\Big(\,|0\rangle + e^{i\pi x_1}e^{i\pi\frac{x_0}{2}}\,|1\rangle\Big)}_{|\tilde{x_1}\rangle} \otimes \underbrace{\Big(\,|0\rangle + e^{i\pi x_2}e^{i\pi\frac{x_1}{2}}e^{i\pi\frac{x_0}{4}}\,|1\rangle\Big)}_{|\tilde{x_0}\rangle}$$

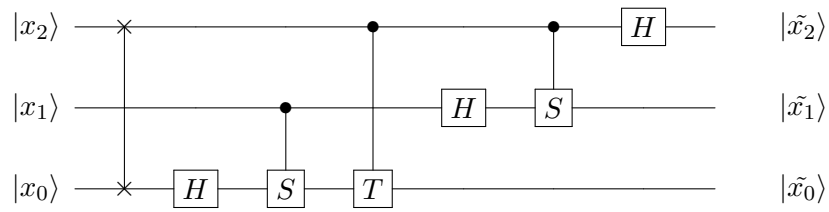

The pattern continues for higher n: swap the order, apply finer and finer "rotations" as necessary with the appropriate control bits, etc. However, we'll need smaller rotation gates, such as $\sqrt{T}$ and more.

12.2 QFT with Decimals

Just like numbers can be represented in binary, decimals can be represented in binary. E.g. for $j = 0.j_1j_2j_3...$ and $j \in [0, 1]$,

$$j = \frac{j_1}{2^1} + \frac{j_2}{2^2} + ... + \frac{j_n}{2_n}$$

Each j_i is 0 or 1.

12.3 Quantum Phase Estimation

12.3.1 Analysis

The problem: given a unitary matrix, we want to estimate its eigenvalue.

$$U\,|u\rangle = \lambda\,|u\rangle = e^{2\pi i\phi}\,|u\rangle$$

U is a unitary matrix, so its eigenvalue is a phase angle, represented by $\lambda = e^{2\pi i\phi}$, where $\phi \in [0, 1]$. By finding ϕ, we can find λ.

What if we apply U 2^j times? Then

$$U^{2^j}\,|u\rangle = e^{2\pi i(2^j\phi)}\,|u\rangle$$

Here it's starting to look a little like the QFT, especially the $e^{2\pi i}$ factor. Maybe if we can find a circuit to build this state, using some ancillas, then apply the inverse QFT, we should be able to get ϕ.

12.3.2 Step 1

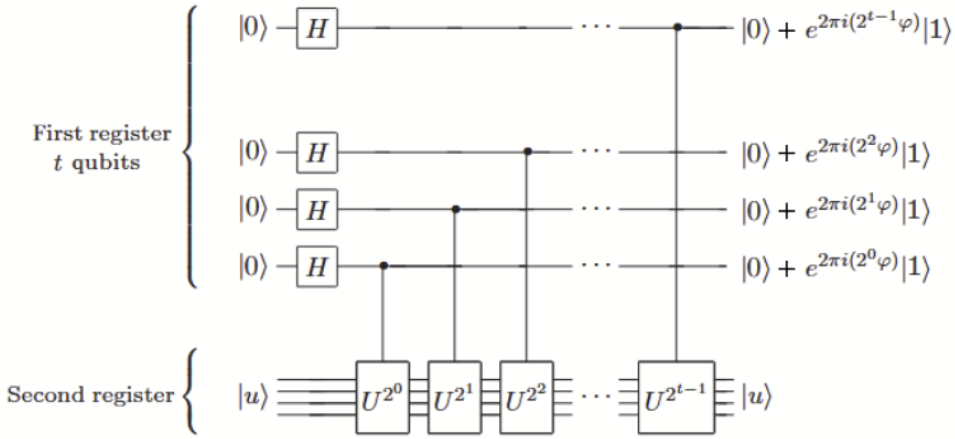

Quantum Phase Estimation circuit, from Nielsen & Chuang p. 222. Normalization factors disregarded.

This is the circuit that will get us there. Using the same gate identity trick as in Bernstein-Vazirani (seek Week 8), we insert H^2 as necessary to flip the control qubits. Then the final state of the first register is

$$|\psi_{top}\rangle = \frac{1}{2^{t/2}}\Big(|0\rangle + e^{2\pi i(2^{t-1}\phi)}|1\rangle\Big)\Big(|0\rangle + e^{2\pi i(2^{t-2}\phi)}|1\rangle\Big)...\Big(|0\rangle + e^{2\pi i(2^0\phi)}|1\rangle\Big)$$

Since ϕ is a decimal, we can write $\phi = 0.\phi_1\phi_2\phi_3...\phi_t$. Note that $2^k\phi = \phi_1\phi_2...\phi_k.\phi_{k+1}...\phi_t$. In an exponent,

$$e^{2\pi i(2^k\phi)} = e^{2\pi i(\phi_1\phi_2...\phi_k + 0.\phi_{k+1}...\phi_t)} = e^{2\pi i(0.\phi_{k+1}...\phi_t)}$$

Going back to the state of the first register, we can rewrite as

$$\begin{aligned}
|\psi_{top}\rangle &= \frac{1}{2^{t/2}}\Big(|0\rangle + e^{2\pi i(0.\phi_t)}|1\rangle\Big)\Big(|0\rangle + e^{2\pi i(0.\phi_{t-1}\phi_t)}|1\rangle\Big)...\Big(|0\rangle + e^{2\pi i(0.\phi_1\phi_2...\phi_t)}|1\rangle\Big) \\
&= \frac{1}{2^{t/2}}\Big(|0\rangle + e^{2\pi i(\frac{\phi_t}{2})}|1\rangle\Big)\Big(|0\rangle + e^{2\pi i(\frac{\phi_{t-1}}{2}+\frac{\phi_t}{4})}|1\rangle\Big)...\Big(|0\rangle + e^{2\pi i(\frac{\phi_1}{2}+\frac{\phi_2}{4}+...+\frac{\phi_t}{2^t})}|1\rangle\Big) \\
&= \frac{1}{2^{t/2}}\sum_{k=0}^{2^n-1} e^{2\pi i \overleftrightarrow{\phi} k}|k\rangle = FT\,|\overleftrightarrow{\phi}\rangle
\end{aligned}$$

Where $\overleftrightarrow{\phi} = \phi_t\phi_{t-1}...\phi_2\phi_1$, an integer. Note that this is "reversed" from the usual order of ϕ. For more details on the QFT product-to-sum, see Week 11.

12.3.3 Step 2

We have our QFT-esque result on the first register. Now we apply the inverse QFT to it in order to get $\overleftrightarrow{\phi}$. By measuring the wires in reverse order, we can get ϕ, then finally $\lambda = e^{2\pi i\phi}$, the eigenvalue of U.

Our complete circuit looks like

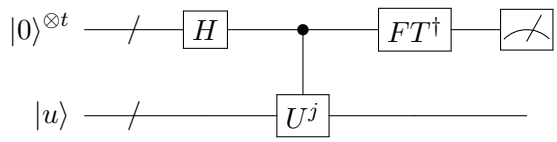

12.3.4 Examples

For $t = 1$ bit,

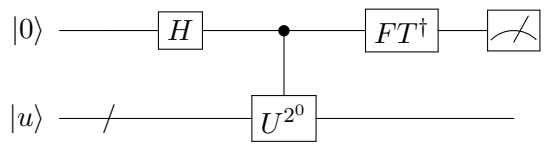

We have $\phi = 0.\phi_1$, and ϕ_1 is 0 or 1. The top register becomes

$$\begin{aligned}
|\psi_{top}\rangle &= \frac{1}{\sqrt{2}}\sum_{k=0}^{1} e^{2\pi i\phi k}\,|k\rangle = \frac{1}{\sqrt{2}}\sum_{k=0}^{1} e^{2\pi i\left(\frac{\phi_1}{2}\right)k}\,|k\rangle \\
&= \frac{1}{\sqrt{2}}\sum_{k=0}^{1} e^{\pi i\phi_1 k}\,|k\rangle = \frac{1}{\sqrt{2}}(-1)^{\phi_1 k}\,|k\rangle \\
&= \frac{1}{\sqrt{2}}\Big(\,|0\rangle + (-1)^{\phi_1}\,|1\rangle\,\Big)
\end{aligned}$$

For $t = 1$, the inverse QFT is just the Hadamard. So by applying $FT^\dagger$, we get $|\phi_1\rangle$. This can be either $|0\rangle$ or $|1\rangle$. Since $\phi = 0.\phi_1$, only $\phi = 0$ or $\phi = \frac{1}{2}$ will work precisely. Others will be a bad estimate.

For $t = 2$ bits, we go through the same thing again.

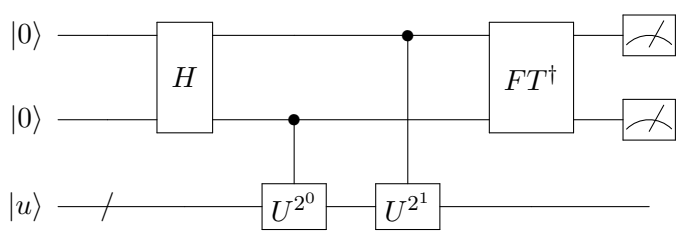

Here $\phi = 0.\phi_1\phi_2$. Right before the inverse QFT, the top register is

$$\begin{aligned}
|\psi_{top}\rangle &= \frac{1}{2}\sum_{k=0}^{3} e^{2\pi i\phi k}\,|k\rangle \\
&= \frac{1}{2}\Big(\,|00\rangle + e^{2\pi i\phi}\,|01\rangle + e^{4\pi i\phi}\,|10\rangle + e^{6\pi i\phi}\,|11\rangle\,\Big)
\end{aligned}$$

Applying the inverse QFT gives

$$FT^\dagger\Big(\frac{1}{2}\sum_{k=0}^{3} e^{2\pi i\phi k}\,|k\rangle\Big) = |\overleftrightarrow{\phi}\rangle$$

Only $\phi = 0.00_2, 0.01_2, 0.10_2, 0.11_2 = 0, \frac{1}{4}, \frac{1}{2}, \frac{3}{4}$ will give precise results.

The more qubits we have, the more accurately we can estimate ϕ.

13 Week 13 (Nov 16 – Nov 22)

13.1 Grover's Algorithm

The problem: Given an unstructured list (length n), find a specific entry "a" with the fewest calls to the oracle.

a is an n-bit string in the 2^n-dimensional Hilbert space of n qubits (i.e. the space of all n-bit strings). We define the oracle as usual:

$$U_f \left|x\right\rangle \left|y\right\rangle = \left|x\right\rangle \left|y \oplus f(x)\right\rangle, \quad f(x) = 1 \text{ if } x = a, \text{ else } 0$$

13.2 Procedure

1. We Hadamard all n bits.
2. In the Hilbert space, our goal is to rotate $\left|\psi\right\rangle = H^{\otimes n} \left|0\right\rangle_n$ to $\left|a\right\rangle$.
   - The "Grover iteration" $G = WV$
   - V: First, the oracle call flips the current state about $\left|a_\perp\right\rangle$
   - W: Next, we flip the current state about $\left|\psi\right\rangle$
3. After repeating G the optimal amount of times, run the state through the oracle U_f. If the result is 0, start over. If the result is 1, we found a.

13.2.1 Geometry

$n = 1$

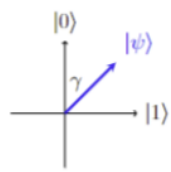

$$H|0\rangle = \frac{1}{\sqrt{2}}(|0\rangle + |1\rangle),$$
$$\langle a|\psi\rangle = \cos\gamma = \frac{1}{\sqrt{2}} \longrightarrow \gamma = 45^o.$$

$n = 2$

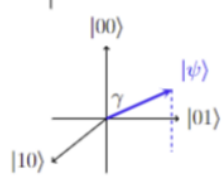

$$H^{\otimes 2}|00\rangle = \frac{1}{2}(|00\rangle + |01\rangle + |10\rangle + |11\rangle),$$
$$\langle a|\psi\rangle = \cos\gamma = \frac{1}{2} \longrightarrow \gamma = 60^o.$$

For n qubits, $\left|\psi\right\rangle = H^{\otimes n} \left|0\right\rangle_n$

In the n-th case, the angle γ between $\left|a\right\rangle$ and $\left|\psi\right\rangle$ is

$$\langle a|\psi\rangle = \cos\gamma = \frac{1}{2^{n/2}}$$
$$\gamma \approx \frac{\pi}{2}$$

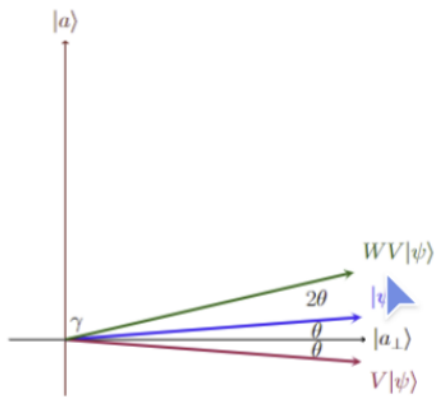

Each iteration of Grover's algorithm

In each iteration, we rotate about $|a_\perp\rangle$, and then about $|\psi\rangle$. If the original angle between $|\psi\rangle$ and $|a_\perp\rangle$ is θ, each iteration rotates $|\psi\rangle$ closer to $|a\rangle$ by 2θ.

13.2.2 Time Complexity

Each iteration, we rotate towards $|a\rangle$ by 2θ. The angle θ between $|\psi\rangle$ and $|a_\perp\rangle$ is given by

$$\sin\theta = \cos\gamma = \frac{1}{2^{n/2}}$$
$$\theta \approx \frac{1}{2^{n/2}} = \sqrt{\frac{1}{N}}$$

We need at least $\frac{\gamma}{2\theta}$ iterations to rotate $|\psi\rangle$ to $|a\rangle$. Note that $\gamma = \frac{\pi}{2} - \theta$.

$$\frac{\gamma}{2\theta} = \frac{\frac{\pi}{2} - \theta}{2\theta} = \frac{\pi}{4\theta} - 1$$
$$\frac{\gamma}{2\theta} \approx \frac{\pi}{4\theta} = \frac{\pi}{4}\sqrt{N}$$

Grover's algorithm runs in $O(\sqrt{N})$ time, where $N = 2^n$ and n is the number of bits. It offers a quadratic speedup over the classical brute force, and can be applied in NP problems.

13.2.3 Constructing V

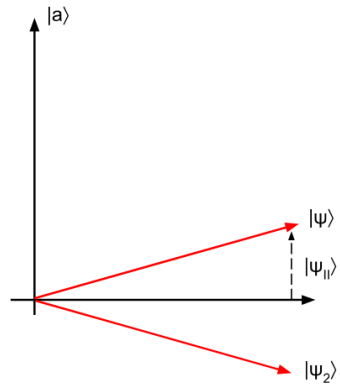

V iteration of Grover's algorithm

In the diagram, $|\psi_{\|}\rangle = |a\rangle \langle a|\psi\rangle$. We want to flip this component, so $|\psi_2\rangle = |\psi\rangle - 2|\psi_{\|}\rangle$. Thus the gate V is

$$V = I - 2|a\rangle\langle a|$$

If we apply this to $|\psi\rangle$, we get $|\psi_2\rangle = V|\psi\rangle = |\psi\rangle - 2|a\rangle\langle a|\psi\rangle$ as desired. Note that since $|\psi\rangle$ is the result of Hadamarding, $V|\psi\rangle$ is just the same as reversing the amplitude of the $|a\rangle$ term. Expressed this way,

$$V|\psi\rangle = \frac{1}{2^{n/2}} \sum_{x=0}^{2^n-1} (-1)^{f(x)} |x\rangle$$

Where it's the superposition of all n-bit strings (result of Hadamard), but with the sign of $|a\rangle$ reversed. Remember, $f(x) = 1$ only when $x = a$.

So we could think of V as just the oracle $U_f = V \otimes I$:

$$U_f |x\rangle |y\rangle = \frac{1}{2^{n/2}} \sum_{x=0}^{2^n-1} (-1)^{f(x)} |x\rangle |y\rangle$$

We don't have to construct any new gates. Just use the given oracle U_f.

13.2.4 Constructing W

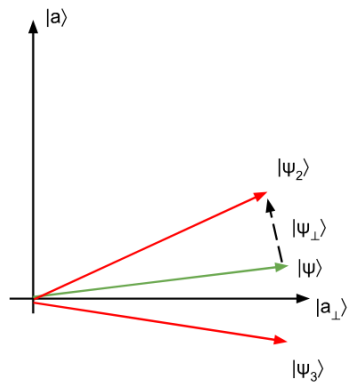

W iteration of Grover's algorithm

Now we want to rotate $|\psi_2\rangle$ about $|\psi\rangle$ (our original state) to get $|\psi_3\rangle$. To do that, we flip the $|\psi_\perp\rangle$ component of $|\psi_2\rangle$.

$$\begin{aligned}|\psi_3\rangle &= W|\psi_2\rangle = |\psi\rangle\langle\psi|\psi_2\rangle - |\psi_\perp\rangle\langle\psi_\perp|\psi_2\rangle \\ &= (2|\psi\rangle\langle\psi| - I)|\psi_2\rangle\end{aligned}$$

In the second step, we used the resolution of identity: $I = |\psi\rangle\langle\psi| + |\psi_\perp\rangle\langle\psi_\perp|$. So our W gate is found to be

$$W = 2|\psi\rangle\langle\psi| - I$$

13.2.5 Example: 2 Bits

So now we have our Grover's iteration: $G = WV$. Consider searching for a string $|a\rangle = |10\rangle$, in the space of all 2-bit strings.

- First, we Hadamard the zero bits: $|\psi\rangle = \frac{1}{2}(|00\rangle + |01\rangle + |10\rangle + |11\rangle)$
- Next, we apply $G = WV$, i.e. $G|\psi\rangle = WV|\psi\rangle$
  - We apply V first, which flips the amplitude of $|a\rangle$: $|\psi_2\rangle = V|\psi\rangle = \frac{1}{2}(|00\rangle + |01\rangle - |10\rangle + |11\rangle)$
  - Then we apply W, which gives: $W|\psi_2\rangle = 2|\psi\rangle\langle\psi|\psi_2\rangle - |\psi_2\rangle = |a\rangle$

Thus we've found the desired string in 1 call to the oracle ($U_f = V \otimes I$). Classically, we'd take on average 2 calls.

13.3 Example: 3SAT

13.3.1 V and W in Circuits

V is easy enough, we just use the standard oracle for 3SAT (see Week 8 for more info).

W is more tricky. If we start with $W = 2|\psi\rangle\langle\psi| - 1$, and $|\psi\rangle = H^{\otimes n}|0\rangle_n$,

$$\begin{aligned}W &= 2(H^{\otimes n}|0\rangle_n\langle 0|_n H^{\otimes n}) - 1 \\ &= H^{\otimes n}(2|0\rangle_n\langle 0|_n H^{\otimes n}) - 1 \\ &= H^{\otimes n}(2|0\rangle_n\langle 0|_n - I)H^{\otimes n}\end{aligned}$$

In the last step we used $H^2 = I$ to bring out the Hadamard inside the parentheses. Anyways, the middle gate $(2\left|0\right\rangle_n \left\langle 0\right|_n - I)$ is going to flip the phase of everything except $\left|0\right\rangle_n$.

We can factor out a global factor of (-1) to use $(I - 2\left|0\right\rangle_n \left\langle 0\right|_n)$ instead, which will only flip the phase of $|0_n\rangle$. It's like the controlled-Z, exept on $\left|0\right\rangle_n$ instead of $\left|1\right\rangle_n$. So we first flip all bits, apply the controlled-Z, and then flip back:

$$2\left|0\right\rangle_n \left\langle 0\right|_n - I = XC_ZX$$
$$W = H^{\otimes n}(2\left|0\right\rangle_n \left\langle 0\right|_n - I)H^{\otimes n} = HXC_ZXH$$

Here's a circuit example with $n = 3$:

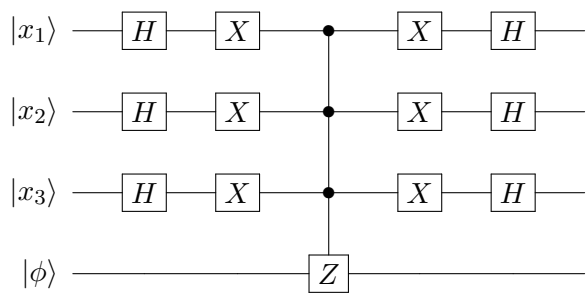

Now we insert $H^2 = I$ surrounding the 3 controls, and use the identity $Z = HXH$. Then we get the followign circuit:

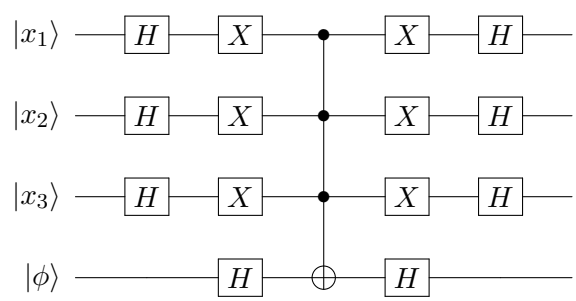

13.3.2 Screenshot

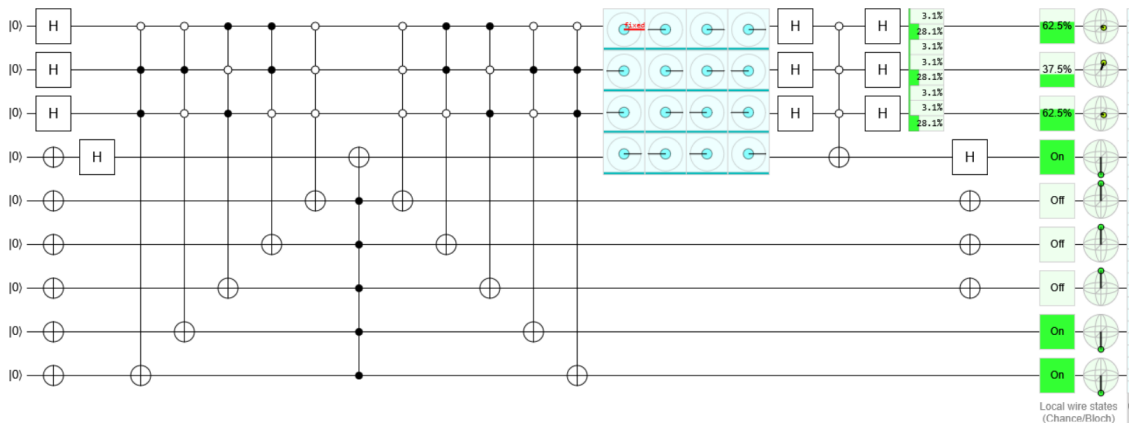

Example of Grover's algorithm with a certain 3SAT problem

Note the first half of the circuit, which does the necessary oracle for 3SAT (and uncomputes the registers). The second half of the circuit is our W gate, with the white circles meaning the control is applied when the bit is 0, not 1.

This is one iteration of $G = WV$. The probabilities have spiked to 28.1% in certain bits. If we run a few more times, those should spike more, and that will tell us the solution to this 3SAT.

Link: https://tinyurl.com/y5c3twlz

14 Week 14 (Nov 23 – Nov 29)

14.1 Basics of Cryptography

Setup: Alice and Bob want to send messages to each other. Eve is eavesdropping. We want to find a way for Alice and Bob to thwart Eve.

14.1.1 The One-Time Pad

A "gold standard" in cryptography. If done right, it's theoretically uncrackable.

Take the example of Soviet Russia and the US. Anastasia (A) and Boris (B) want to send messages without Eisenhower (E) eavesdropping. This was achieved by distributing a "pad" of keys to agents beforehand. Every time Anastasia and Boris communicate, they would use the key at the top, then discard it.

At one point the US managed to successfully crack the encoded messages, not because the one-time pad is insecure, but because agents started re-using pads.

14.1.2 Key Distribution

The goal of cryptography is to distribute those keys to Alice and Bob (or Anastasia and Boris) securely. It's cumbersome to do this through private channels, e.g. in physical meetings. We want to do it through public channels, e.g. the internet.

But anyone can theoretically eavesdrop over public channels. Can we securely distribute keys nevertheless?

14.2 Diffie-Hellman Key Exchange

Diffie-Hellman is a classical key distribution process. It leverages the asymmetrical difficulty in the discrete log problem:

$$g, p = \text{known}$$
$$A = g^a \mod p$$
$$\text{Easy to find } A \text{ given } a\text{, but hard to find } a \text{ given } A.$$

Here's how it works:

Stage 1: Setup

1. A large prime p and a primitive root g is chosen such that $2 \leq g \leq p - 2$. These are announced publicly.
   - "Primitive root" g: for every $A < p$, we can find some a such that $A = g^a \mod p$.
   - That is, $g^a \mod p$ can eventually generate every integer less than p.
   - We call g a generator of p.

Stage 2: Alice & Bob generate strings

2. Alice chooses a random a and generates $A = g^a \mod p$.
3. Bob chooses a random b and generates $B = g^b \mod p$.
4. Alice sends A to Bob. Bob sends B to Alice.

Stage 3: Shared key generation

5. Alice computes $B^a \mod p = g^{ab} \mod p$.
6. Bob computes $A^b \mod p = g^{ab} \mod p$.
7. Alice and Bob now share the same key $K = g^{ab} \mod p$.

Note that Eve might know g, p, A, and B. However, by nature of the discrete log problem, it's difficult for her to figure out what a, b could be.

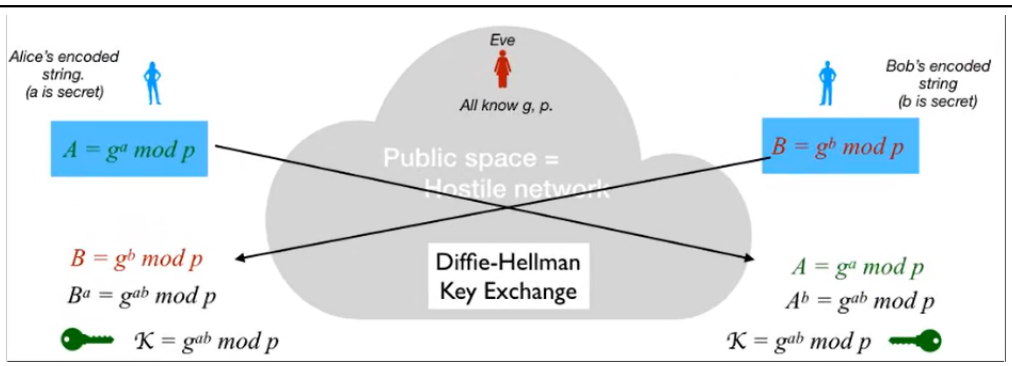

Diffie-Hellman Key Exchange

14.3 RSA

The RSA is another public key exchange system, except only one side needs to generate the key. This makes it easier in some cases than Diffie-Hellman, where both Alice and Bob need to generate and send their public keys.

Step 1: Bob setup

1. Bob generates p, q: two large prime numbers.
2. Bob computes $N = pq$ and shares it publicly.
3. Bob finds some e such that $1 < e < (p-1)(q-1)$, and e is coprime with $(p-1)(q-1)$. He shares this publicly.
4. Bob also generates d, the modular inverse of e such that $1 < d < (p-1)(q-1)$ and $d = e^{-1} \mod (p-1)(q-1)$.
   - d solves the equation $de = 1 \mod (p-1)(q-1)$

Step 2: Alice sends her string

5. Alice generates a secret string M less than N.
6. Alice computes $C = M^e \mod N$. She sends this publicly to Bob.
   - Recall that N and e were announced publicly, so Eve could try to brute force what M is. But the discrete log problem takes a very long time classically.
7. Bob computes $C^d = M^{ed} \mod N = M$. Alice and Bob have now exchanged the secret message securely.

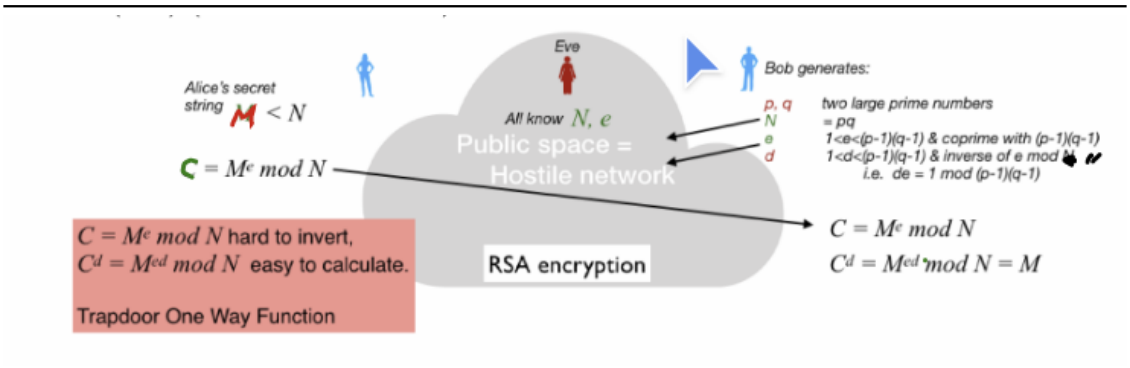

RSA Key Exchange

14.4 Quantum Key Distribution (BB84)

In quantum key distribution, we leverage the no-cloning principle: if Alice sends some qubits to Bob, Eve can't make a copy of those qubits. She can only measure them, which risks changing their state. In BB84, this is used to test a public channel for potential eavesdroppers.

Stage 1: Alice sends key

1. Alice generates a long n-bit string A.
2. Alice also generates a long $2n$-bit string b (needs to be longer than n).
3. Alice takes n photons, corresponding to her n-bit string A. Depending on b_i, she encodes each photon in the computational or Hadamard basis.
   - If $b_i = 0$: $|A_i\rangle$

- If $b_i = 1$: $(1 - A_i)\,|+\rangle + A_i\,|-\rangle$

4. Alice sends her photons to Bob.

Stage 2: Bob generates string

5. Bob generates his own $2n$-bit string b'.
6. Taking the photons from Alice, Bob measures each photon in the computational basis of $b'_i = 0$, and in the Hadamard basis if $b'_i = 1$.
7. Bob now has the result of his measurement: A'

Stage 3: Alice and Bob compare strings

7. Alice now publicly announces her bitstring b.
8. Bob compares Alice's b and his b'. Wherever they're different, discard that bit. Publicly announce to Alice which are to be discarded.
9. Alice selects a small subset of her original string A without the discarded bits, then sends to Bob. Bob compares it with his corresponding subset in A'.
10. If the bits match to a high degree, then no one has tampered with the channel. Otherwise, someone has altered the bits midway (i.e. made a measurement). Alice and Bob start over on a new channel.

15 Winter Break

16 Winter Break

17 Week 17 (Jan 12 – Jan 16)

17.1 Review of Number Theory

17.1.1 Generators (Primitive Roots mod N)

We call g a generator mod N (or "primitive root mod N") if for every integer a coprime to N, there exists k such that

$$g^k \equiv a \pmod{N}$$

It's a "generator mod N" because every integer from 1 to $N-1$ appears in a periodically. That is, from $k = \{1, 2, ...N-1\}$, g^kmod N gives every integer $\{1, 2, ..., N-1\}$ without repeating.

As an example, consider $N = 13$, which is obviously coprime with integer a for $a < N$. Consider $g = 7$:

$$\begin{array}{llll}
7^1 \mod 13 = 7 & 7^2 \mod 13 & = 10 & 7^3 \mod 13 = 5 \\
7^1 \mod 13 = 9 & 7^2 \mod 13 & = 11 & 7^3 \mod 13 = 12 \\
7^1 \mod 13 = 6 & 7^2 \mod 13 & = 3 & 7^3 \mod 13 = 8 \\
7^1 \mod 13 = 4 & 7^2 \mod 13 & = 2 & 7^3 \mod 13 = 1
\end{array}$$

Every number from 1 to $N - 1 = 12$ has been generated, so 7 is a generator mod N. This has some uses in cryptography, because the distribution of a appears to be random.

17.1.2 Miscellaneous Topics

Chinese Remainder Theorem: For prime p, q and any integer x, y,

$$x \equiv y \mod pq \implies \begin{cases} x \equiv y \mod p \\ x \equiv y \mod q \end{cases}$$

Fermat's Little Theorem: For prime p and integer a,

$$a^{p-1} \equiv 1 \mod p$$

In equivalent forms:

$$\begin{aligned} a^p &\equiv a \mod p \\ a^p - a &\equiv 0 \mod p \\ p &\mid a^p - a \end{aligned}$$

I.e. "p divides $a^p - a$"

Order & Period-Finding: Given a random b and large N, if b and N are coprime, we define

$$f(x) = b^x \mod N$$

The *order* of f, denoted r, is the smallest nonzero integer such that

$$\begin{aligned} b^r &\equiv 1 \mod N \\ b^r - 1 &\equiv 0 \mod N \end{aligned}$$

The *period* of f, denoted r', is the smallest nonzero integer such that

$$f(x + r') = f(x)$$

Here, $r' = kr$, where r is the order and k is some integer. The function is known to be periodic, since

$$\begin{aligned} f(x + r') &= b^x b^{r'} \mod N \\ &= b^x b^{kr} \mod N \\ &= b^x (b^r)^k \mod N \\ &= b^x \mod N \\ &= f(x) \end{aligned}$$

We used the fact that $b^r \equiv 1 \mod N$, from the definition of the order.

In the future, period-finding will become useful for factoring $N = pq$. If r is even, for example, then

$$b^r - 1 = (b^{r/2} + 1)(b^{r/2} - 1) \equiv 0 \mod N$$

If either of the terms in the parentheses is a multiple of N, we learn nothing. Otherwise, we can gain information about p and q using gcb$(b^{r/2} - 1, N)$. More on that later.

Summary: finding the period of $f(x)$ allows us to determine the prime factors of N.

Note: this is similar to Simon's algorithm. But Simon's algorithm used mod-2 addition, while we're using natural addition. That makes things much harder.

17.2 Breaking RSA

Recall from Week 14 the details of RSA. Bob chooses prime p, q and generates $N = pq$. He also generates e, an integer that's coprime to $\varphi(N) = (p-1)(q-1)$. He shares N and e publicly. Privately, he finds the modular inverse of e mod N, denoted d. Here $ed = 1 \bmod N$.

Alice has a secret message M she wants to send to Bob. She calcualtes $C = M^e \bmod N$ and sends publicly. An eavesdropper could know this, but the discrete log problem is hard classically.

From Fermat's little theorem, Bob knows that

$$\begin{aligned} M^{p-1} &= 1 \mod p \\ M^{q-1} &= 1 \mod q \\ M^{(p-1)(q-1)} &= 1 \mod pq \end{aligned}$$

Thus he can find

$$\begin{gathered} C^d = M^{ed} \bmod N = M^{1+k(p-1)(q-1)} \bmod pq \\ C^d = M \mod N \end{gathered}$$

This relies on the fact that the discrete log problem is hard classically. But say Eve (the eavesdropper) knows the period of C, denoted r. That is,

$$C^r = 1 \mod N$$

If this happens, we can break RSA. Two options are given below.

17.2.1 1. Finding p and q

Since $C^r = 1 \bmod N$, if r is even, we have

$$(C^{r/2} + 1)(C^{r/2} - 1) = 1 \mod N$$

Thus we know that

$$\begin{aligned} C^{r/2} + 1 &= p \mod N \\ C^{r/2} - 1 &= p \mod N \end{aligned}$$

Or vice versa. We can find $\gcd(C^{r/2}+1, N)$ and $\gcd(C^{r/2}-1, N)$ to factor N as pq. Then we can calculate the totient function $\varphi(N) = (p-1)(q-1)$. From here, find the multiplicative inverse d where $ed = 1 \bmod \varphi(N)$, a classically easy problem.

Then we intercept Alice's encrypted message C and recover the original message M.

$$C^d = M^{ed} \bmod N = M$$

17.2.2 2. Without Finding p and q

There's also a way to break RSA without having to find p and q. We can immediately find a modular inverse d instead.

This involves some number theory. First, note that C is periodic in r: $C^r = 1 \bmod N$. Thus

$$C^d = M^{ed} \bmod N = M$$
$$C^d = C^{d \bmod r} = M$$

Note that:

$$C^{ed \bmod r} = \left(C^{d \bmod r}\right)^e = M^e \bmod N = C$$

The last step was by definition. So we can say

$$ed = 1 \mod r$$

And finding the modular inverse is a classically easy problem. Note that the modulus here is r, which we assume to know. We can therefore find d.

Next, intercept Alice's encrypted message C and recover the original message M.

$$C^d = M^{ed} \bmod N = M$$

Interestingly, the order of C is also an order of M. We had $C^r = 1 \bmod N$ and $M^{ed} = M \bmod N$, plus $ed = 1 \bmod r$.

17.3 Shor's Algorithm: Overview

Shor's algorithm can be used to find the period r of C mod N. Using this, we can break RSA and factorize $N = pq$, where p and q are large primes.

1. Pick a random a between 2 and N. Use Euclid's algorithm to compute $\gcd(a, N)$ classically.
   - If this isn't 1, we found a factor of N, so we can stop.
   - If this is 1, a and N are coprime. Proceed to step 2.
2. Since a and N are coprime, we can find the order of a mod N, i.e. the smallest integer r such that

   $$a^0 \equiv a^r \mod N$$
   $$a^r \equiv 1 \mod N$$

   In other words, $a^r - 1 \equiv 0 \bmod N$, so N divides $a^r - 1$. **This part uses a quantum algorithm.**

3. Now we know that N divides $a^r - 1$. If r is odd, redo with a different a until we get an even r. Then

$$N \mid a^r - 1$$
$$N \mid (a^{r/2} - 1)(a^{r/2} + 1)$$

It can't be the case that N divides $(a^{r/2} - 1)$, since that would imply $a^{r/2} \equiv 1 \bmod N$, where $r/2$ is the order of a. But we were assuming that r was the smallest order of a in step 2. Thus, perhaps N divides $(a^{r/2} + 1)$.

4. Compute

$$d = \gcd(N, a^{r/2} + 1)$$

If $d = 1$, then we failed to find a factor of N, so restart with a different a. Otherwise, we found d as one factor of N, and N/d as the other factor.

The only classically hard part of the algorithm is step 2, where we have to find the order of a mod N. This can be done efficiently with a Quantum Fourier Transform (QFT).

It might be that we have to redo the algorithm a few times, e.g. in step 1 (picking a), step 3 (finding even r), and step 4 (finding nontrivial divisor). Usually, a few runs are enough to factor N.

18 Week 18 (Jan 19 – Jan 23)

18.1 Quantum Subroutine of Shor's Algorithm

Our goal is to find the order of a mod N, given a and N are coprime. The order is denoted r.

Recall Simon's algorithm from Week 9:

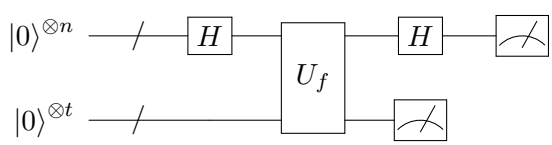

Shor's algorithm is similar, except with normal addition instead of mod 2 addition for the order.

Algorithm step	Simon's: $f(x) = f(x \oplus a)$	Shor's: $f(x) = f(x + kr)$
Initialize qubits*	$\lvert 0\rangle^{\otimes n} \lvert 0\rangle^{\otimes t}$	$\lvert 0\rangle^{\otimes n} \lvert 0\rangle^{\otimes t}$
Hadamard input	$\frac{1}{\sqrt{N}} \sum_{x=0}^{2^n-1} \lvert x\rangle \lvert 0\rangle$	$\frac{1}{\sqrt{N}} \sum_{x=0}^{2^n-1} \lvert x\rangle \lvert 0\rangle$
Apply oracle	$\frac{1}{\sqrt{N}} \sum_{x=0}^{2^n-1} \lvert x\rangle \lvert f(x)\rangle$	$\frac{1}{\sqrt{N}} \sum_{x=0}^{2^n-1} \lvert x\rangle \lvert f(x)\rangle$
Measure output**	$\frac{1}{\sqrt{2}} \sum_{k=0}^{1} \lvert x_0 \oplus ka\rangle$	$\frac{1}{\sqrt{m}} \sum_{k=0}^{m-1} \lvert x_0 + kr\rangle$
Hadamard/QFT input***	$\frac{1}{\sqrt{2N}} \sum_{y=0}^{2^n-1} \left[(-1)^{x_0 y} + (-1)^{(x_0 \oplus a)y}\right] \lvert y\rangle$	$\frac{1}{\sqrt{mN}} \sum_{y=0}^{2^n-1} \sum_{k=0}^{m-1} e^{i2\pi(x_0+kr)y/N} \lvert y\rangle$
Measure input	—	—
Post-processing	$a \cdot y = 0$	$y \longrightarrow y_0 \sim j\frac{2^n}{r}, \;\; j \in \mathbb{Z}^+$

At the end of Shor's algorithm, we get a random value $y_0 = j\frac{2^n}{r}$, where j is an integer.

*The input register has n qubits, and the work register has t qubits.

**Here m is the largest integer less than $2^n/r$, since that's how many times we can "fit" r into 2^n.

***Instead of Hadamarding the second time for Shor's, we apply QFT on the input register.

18.2 Shor's Algorithm: More Steps

The basic procedure is the same as above.

First, we initialize the input register $|0\rangle^{\otimes n}$. We send the input register through the Hadamard:

$$|\psi_1\rangle = \frac{1}{\sqrt{2^n}} \sum_{x=0}^{2^n-1} |x\rangle |0\rangle$$

Now we send through the oracle $U|x\rangle|y\rangle = |x\rangle|y \oplus f(x)\rangle$. The function is $f(x) = a^x \bmod N$.

$$|\psi_2\rangle = \frac{1}{\sqrt{2^n}} \sum_{x=0}^{2^n-1} |x\rangle |f(x)\rangle$$

Next, we measure the output register. Then the input register collapses to a superposition of all inputs that give that output. Here $m = \left\lfloor \frac{2^n}{r} \right\rfloor$, the largest integer less than $2^n/r$ (the order is r, so we can fit in m times that maximum).

$$|\psi_3\rangle = \frac{1}{\sqrt{m}} \sum_{k=0}^{m-1} |x_0 + kr\rangle$$

Now things get interesting. Instead of a Hadamard, we apply QFT to the input register:

$$\begin{aligned} |\psi_4\rangle &= \frac{1}{\sqrt{2^n m}} \sum_{k=0}^{m-1} \sum_{y=0}^{2^n-1} e^{i2\pi(x_0+kr)y/2^n} |y\rangle \\ &= \frac{1}{\sqrt{2^n m}} \sum_{y=0}^{2^n-1} e^{i2\pi x_0 y/2^n} \sum_{k=0}^{m-1} e^{i2\pi \frac{ykr}{2^n}} |y\rangle \end{aligned}$$

Notice that we've separated the y and k within the exponent. So we can rewrite our state as

$$|\psi_4\rangle = \sum_{y=0}^{2^n-1} a_y |y\rangle, \quad a_y = e^{i2\pi x_0 y/2^n} \frac{1}{\sqrt{2^n m}} \sum_{k=0}^{m-1} e^{i2\pi \frac{ykr}{2^n}}$$

Then our probability to measure outcome $y \longrightarrow b$ is

$$P(b) = |a_b|^2 = \frac{1}{2^n m} \left| \sum_{k=0}^{m-1} e^{i2\pi \frac{bkr}{2^n}} \right|^2$$

Note that we've managed to get rid of x_0. Now we can analyze the results of our measurement.

18.2.1 Measuring an integer

If $b = j\frac{2^n}{r}$ exactly, where j is a random integer, then the probability of measuring it is

$$P(b) = \frac{1}{2^n m}\left|\sum_{k=0}^{m-1} e^{i2\pi jk}\right|^2 = \frac{1}{2^n m}\cdot m^2$$
$$P(b) = \frac{m}{2^n}$$

Since $m = \left\lfloor \frac{2^n}{r} \right\rfloor$, we have

$$P(b) = \frac{1}{r}$$

The probability of measuring exactly b is $1/r$.

18.2.2 Measuring a non-integer

What if the outcome isn't exactly b? Consider being within $\frac{1}{2}$ of another integer $j\frac{2^n}{r}$. Say the outcome is $b = j\frac{2^n}{r} + \delta_j$. Using angle identities and simplifying, we have

$$P(b) = \frac{1}{2^n m}\left|\sum_{k=0}^{m-1} e^{i2\pi jk} e^{i2\pi\delta_j kr/2^n}\right|^2 = \frac{1}{2^n m}\left|\frac{1 - e^{i2\pi\delta_j mr/2^n}}{1 - e^{i2\pi\delta_j r/2^n}}\right|^2$$
$$P(b) = \frac{1}{2^n m}\frac{\sin^2(\pi\delta_j rm/2^n)}{\sin^2(\pi\delta_j r/2^n)}$$

Now since $m = \left\lfloor \frac{2^n}{r} \right\rfloor$, we have $mr \approx 2^n$, so

$$P(b) \approx \frac{1}{2^n m}\frac{\sin^2(\pi\delta_j)}{\sin^2(\pi\delta_j r/2^n)}$$

By choosing a large enough 2^n, we can use the small angle approximation:

$$P(b) \approx \frac{1}{2^n m}\left(\frac{\sin(\pi\delta_j)}{\pi\delta_j r/2^n}\right)^2 = \frac{2^n}{mr}\left(\frac{\sin(\pi\delta_j)}{\pi\delta_j r/2^n}\right)^2$$
$$P(b) \approx \frac{1}{r}\left(\frac{\sin(\pi\delta_j)}{\pi\delta_j r/2^n}\right)^2$$

The sinc function is spiked around b, so we know that the probability of measuring b (with $\delta_j = 0$) is highest.

In particular, if we measure $y \to b\frac{2^n}{r}$, there's a high probability that b will be within $\frac{1}{2}$ of $j\frac{2^n}{r}$ for some integer j.

18.2.3 Interpreting results

After all that, we want to find the form of $b = j\frac{2^n}{r}$, where j is a random integer. Rearrange to get

$$\frac{b}{2^n} = \frac{j}{r}$$

We calculate the continued fraction $\frac{b}{2^n}$, cutting off when a sufficiently large value is encountered in the denominator (since anything else will be negligible). For example, if $b = 11490$ and $n = 14$,

$$\frac{11490}{2^{14}} = 0 + \frac{1}{1 + \frac{1}{2+\frac{1}{2+\frac{1}{1+\frac{1}{7+\frac{1}{35+\cdots}}}}}} \approx \frac{54}{77}$$

Here we might reasonably guess that the order is $r = 77$.

Note that this isn't even, so in Shor's algorithm, we'd have to try again until we get an even r.

To summarize Shor's algorithm:

1. Basic steps are similar to Simon's, except with QFT.
2. Probability of measuring b is spiked near b.
3. Use continued fractions to approximate $b/2^n$ and get r from that.
4. Redo as many times as necessary.

19 Week 19 (Jan 26 – Jan 30)

19.1 Review: How to Crack RSA with Shor's

19.1.1 RSA Procedure

Bob generates $N = pq$, where $p and $q are large primes. He also finds e, an integer that's coprime to $\varphi(N) = (p-1)(q-1)$. Bob announces N and e publicly. He also finds the modular inverse d of e mod $\varphi(N)$, which satisfies $ed = 1 \bmod \varphi(N)$.

Alice wants to send a secret message M to Bob. She encodes this as $C = M^e \bmod N$ and sends C publicly. From Fermat's little theorem, Bob knows

$$M^{p-1} = 1 \bmod p \quad , \quad M^{q-1} = 1 \bmod q$$
$$M^{(p-1)(q-1)} = 1 \mod pq$$

To recover M, Bob can find

$$C^d = M^{ed} \bmod N = M^{1+k(p-1)(q-1)} \bmod pq = M$$

19.1.2 Shor's Algorithm

Shor's algorithm can factor $N = pq$ and intercept the message. Let Eve be the eavesdropper. First, Eve intercepts C from Alice. Eve also knows N and e, which are public. Eve wants to determine the modular inverse d, which can be used to recover the original message M.

Construct $f(x) = y^x \bmod N$ with $y < N$ and $\gcd(y, N) = 1$. Eve uses a **quantum subroutine** to determine the period r of $f(x)$. That is, r is the smallest nonzero integer such that

$$\begin{aligned} f(r) &= f(0) \\ y^r &= 1 \mod N \end{aligned}$$

If r is odd, start over. Otherwise, rewrite as

$$\begin{aligned} y^r - 1 &= 0 \mod N \\ (y^{r/2} + 1)(y^{r/2} - 1) &= 0 \mod N \end{aligned}$$

If either $(y^{r/2}+1)$ or $(y^{r/2}-1)$ are multiples of N, start over. Otherwise, we know that $(y^{r/2}+1) = \lambda_p p$ and $(y^{r/2} - 1) = \lambda_q q$. p and q might be switched, but that doesn't matter. Now find p and q:

$$\begin{aligned} p &= \gcd(y^{r/2} + 1, N) \\ q &= \gcd(y^{r/2} - 1, N) \end{aligned}$$

Since Eve knows p and q, she can find $\varphi(N) = (p-1)(q-1)$ and calculate d using

$$ed = 1 \mod (p-1)(q-1)$$

Finally, she recovers M by exponentiating the intercepted message:

$$C^d = M^{ed} \bmod N = M$$

19.1.3 Order-Finding Subroutine

Classically, finding the order of $f(x) = y^x \bmod N$ is difficult. However, we can do this with quantum computing.

Construct a quantum circuit with 2 registers of size n and t. The oracle is $U|x\rangle|y\rangle = |x\rangle|y \oplus f(x)\rangle$.

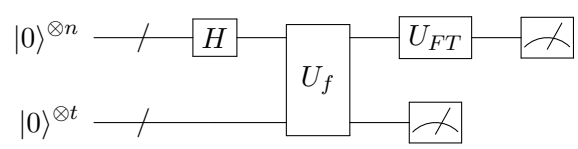

Our state before the QFT is (with $m = \lfloor 2^n/r \rfloor$)

$$|0\rangle^{\otimes n}|0\rangle^{\otimes t} \longrightarrow \frac{1}{\sqrt{2^n}} \sum_x |x\rangle^{\otimes n}|0\rangle^{\otimes t} \longrightarrow \frac{1}{\sqrt{2^n}} \sum_x |x\rangle^{\otimes n}|f(x)\rangle^{\otimes t}$$

When we measure the bottom register, the top register collapses into a superposition of all possible x for some $f(x)$.

$$\frac{1}{\sqrt{m}} \sum_{k=0}^{m-1} |x_0 + kr\rangle$$

Now apply the QFT gate:

$$U_{FT}\frac{1}{\sqrt{m}}\sum_{k=0}^{m-1}|x_0+kr\rangle = \frac{1}{\sqrt{2^n}m}\sum_{y=0}^{2^n-1}\sum_{k=0}^{m-1}e^{i2\pi(x_0+kr)\cdot y/2^n}\,|y\rangle$$
$$= \frac{1}{\sqrt{2^n}m}\sum_{y=0}^{2^n-1}e^{i2\pi x_0 y/2^n}\sum_{k=0}^{m-1}e^{i2\pi kry/2^n}\,|y\rangle$$

We've managed to factor away the unknown x_0. Using geometric sums and properties of Euler's formula, it can be shown that

$$\sum_{k=0}^{m-1} = e^{i2\pi kry/2^n} = \begin{cases} 2^n/r & \text{If } l = j\frac{2^n}{r} \text{ for some integer } j \\ 0 & \text{If } l \text{ is an integer but } l \neq j\frac{2^n}{r} \end{cases}$$

Therefore, by measuring our state, we get some y such that

$$y \longrightarrow b \sim j\frac{2^n}{r}$$

Moreover, it turns out that there's a high probability b will be within $\frac{1}{2}$ of an integer. To find r, we can find the continued fraction expression of $\frac{b}{2^n}$ and cut off at a sufficiently high value in the denominator:

$$\frac{b}{2^n} = \frac{j}{r}$$

Whenever we run this subroutine again, we get a random value of $y \longrightarrow b$ and subsequently r. This can be used to discover information about N and factorize it.

19.2 Bonus: Cracking Diffie-Hellman with Shor's

19.2.1 Diffie-Hellman Key Exchange

(Review of Week 14) First, Alice and Bob publicly agree on a large prime p and a primitive root $2 \leq g \leq p-2$. Next, Alice chooses a random a and generates $A = g^a \bmod p$. Bob also chooses a random b and generates $B = g^b \bmod p$.

Both send their keys to each other. Alice computes $B^a \bmod p = g^{ab} \bmod p$. Bob computes $A^b \bmod p = g^{ab} \bmod p$. Both now share the same key

$$K = g^{ab} \mod p$$

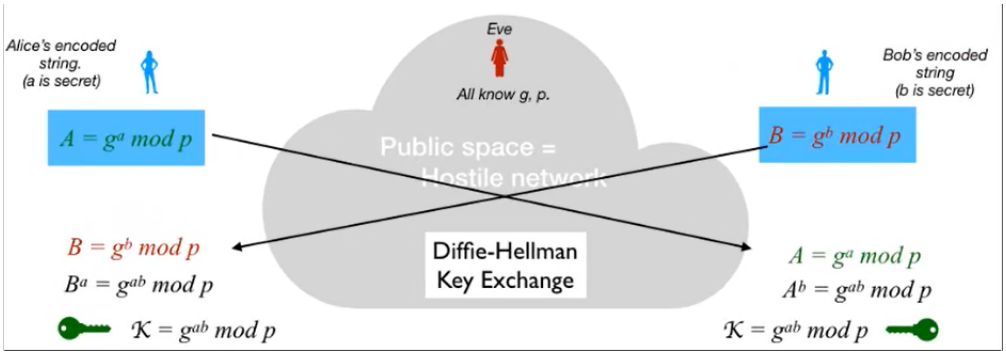

Diffie-Hellman key exchange procedure

19.2.2 Quantum Algorithm

(Skim this, details aren't good. But know that it can be done with QFT.)

This is an algorithm that can crack a discrete log. Given $A = g^a \bmod p$, our goal is to find a. Using the order-finding subroutine of Shor's algorithm, we can find the period r of the function $g^x \bmod p$.

Now consider

$$f(x_1, x_2) = A^{x_1} g^{x_2} \bmod p = g^{ax_1} g^{x_2} \bmod p = g^{ax_1 + x_2} \bmod p$$

This is periodic: $f(x_1 + kr, x_2 - kar) = f(x_1, x_2)$.

Next, define the oracle $U\left|x_1\right\rangle\left|x_2\right\rangle\left|y\right\rangle = \left|x_1\right\rangle\left|x_2\right\rangle\left|y \oplus f(x_1, x_2)\right\rangle$, where $f(x_1, x_2) = b^{x_1} a^{x_2}$.

Initialize our three registers to $\left|0\right\rangle$. Hadamard them to get a superposition and apply the oracle.

$$\left|0\right\rangle^{\otimes n}\left|0\right\rangle^{\otimes n}\left|0\right\rangle \longrightarrow \frac{1}{2^n}\sum_{x_1=0}^{2^n-1}\sum_{x_2=0}^{2^n-1}\left|x_1\right\rangle\left|x_2\right\rangle\left|f(x_1, x_2)\right\rangle$$

Apply QFT:

$$\begin{aligned}
&\longrightarrow \frac{1}{2^n}\frac{1}{\sqrt{r}}\sum_{l=0}^{r-1}\sum_{x_1=0}^{2^n-1}\sum_{x_2=0}^{2^n-1} e^{i2\pi(alx_1 + lx_2)/r}\left|x_1\right\rangle\left|x_2\right\rangle\left|\hat{f}(al, l)\right\rangle \\
&= \frac{1}{\sqrt{r}}\sum_{l=0}^{r-1}\left[\frac{1}{\sqrt{2^n}}\sum_{x_1=0}^{2^n-1} e^{i2\pi alx_1/r}\left|x_1\right\rangle\right]\left[\frac{1}{\sqrt{2^n}}\sum_{x_2=0}^{2^n-1} e^{i2\pi lx_2/r}\left|x_2\right\rangle\right]\left|\hat{f}(al, l)\right\rangle
\end{aligned}$$

Apply the inverse QFT to get

$$\longrightarrow \frac{1}{\sqrt{r}}\sum_{l=0}^{r-1}\left|a\frac{\tilde{l}}{r}\right\rangle\left|\frac{\tilde{l}}{r}\right\rangle\left|\hat{f}(al, l)\right\rangle$$

Measure the first two registers, round, and take the ratio to learn a. Now we can take Bob's public key B and find the private keys:

$$B^a = g^{ab} \bmod p = K$$

19.3 Continuum Limit of Wavefunctions

We're going to have a brief review of quantum mechanics. In particular, how to discretize a continuous variable (e.g. position, momentum). First, the wavefunction is represented by $|\psi\rangle$. This isn't in any particular basis. We can project onto a basis (position basis, momentum basis, etc.) to measure its components. For now we put into the position basis with N divisions.

$$|\psi\rangle = \sum_{i=-\infty}^{\infty} \text{Proj}_{x_i}(\psi)\Delta x_i = \sum_{i=-\infty}^{\infty} |x_i\rangle \langle x_i|\psi\rangle \Delta x$$

Normally, the probability of measuring at any specific x_i is $|\langle\psi|x_i\rangle|^2$. But a nuance when going to the continuous limit is that we can't say "what's the probability of measuring at x_0?" or similar. $\Delta x \to 0$, so the probability will also go to 0. Instead, we can ask "what's the probability of measuring between x_0 and $x_0 + \Delta x$?"

Additionally, the wavefunction must be normalized. We can derive the condition from classical summation:

$$\sum P(x \text{ in } \psi) = \sum_x \langle\psi|x\rangle \langle x|\psi\rangle = 1 \tag{discrete}$$

$$\int_{-\infty}^{+\infty} |\psi|^2 \, dx = \int_{-\infty}^{+\infty} \psi^*(x)\psi(x) \, dx = \int_{-\infty}^{+\infty} \langle\psi|x\rangle \langle x|\psi\rangle \, dx = 1 \tag{continuous}$$

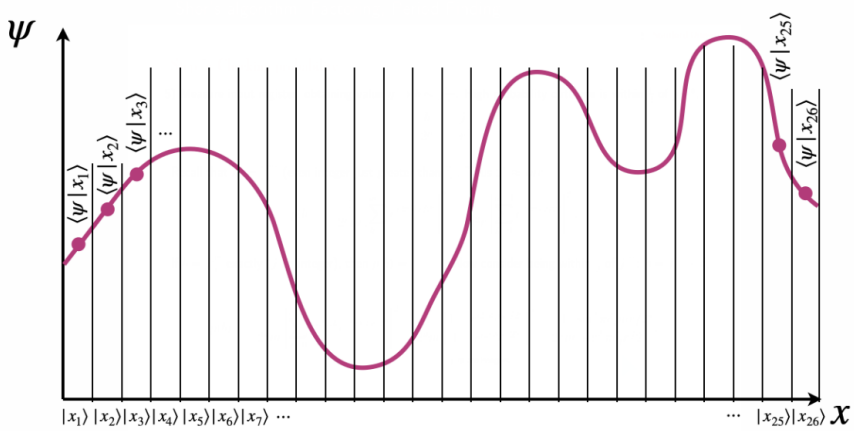

Discretizing the wavefunction. Looks similar to integration.

19.3.1 Dr. Oas's Grad School Paradox

From commutation relations, we know that

$$[X, P] = i\hbar$$

Slam on $|x_i\rangle$ to get

$$\begin{aligned} \langle x_i| [X, P] |x_i\rangle &= i\hbar \\ \langle x_i| XP |x_i\rangle - \langle x_i| PX |x_i\rangle &= i\hbar \\ x_i \langle x_i| P |x_i\rangle - \langle x_i| P |x_i\rangle x_i &= i\hbar \\ 0 &= i\hbar \end{aligned} \tag{huh?}$$

The problem is that for continuous observables like position and momentum, the ket vectors are no longer normalizable: $\langle x_i|x_i\rangle \neq 1$. Instead, we have to use the Dirac delta function: $\langle x_i|x_j\rangle = \delta(x_i - x_j)$.

$$\delta(x) = \begin{cases} 0 & x \neq 0 \\ \infty & x = 0 \end{cases} \quad , \quad \int_{-\infty}^{+\infty} \delta(x)dx = 1$$

19.4 The Schrödinger Equation

19.4.1 Time-Dependent Form (General)

The Schrödinger Equation describes the evolution of a state over time. Its general form is

$$i\hbar \frac{\partial}{\partial t} |\Psi\rangle = \hat{H} |\Psi\rangle$$

where $\hat{H} = \frac{\hat{P}^2}{2m} + V$ is the operator version of the Hamiltonian for classical energy. Plugging in the Hamiltonian and considering a continuous wavefunction, the equation becomes

$$i\hbar \frac{\partial \Psi(x,t)}{\partial t} = -\frac{\hbar}{2m}\frac{\partial^2}{\partial x^2}\Psi(x,t) + V\Psi(x,t)$$

This is the general *Time-Dependent Schrödinger Equation*. Thus our limitations on the time-dependent quantum state Ψ are:

i) Ψ must satisfy the Schrödinger Equation

ii) Ψ must always be normalized

iii) Ψ must be continuous

iv) $\frac{d\Psi}{dx}$ must be continuous, unless $V \to \infty$

v) $\Psi \to 0$ as $x \to \pm\infty$

19.4.2 Time-Independent Form

For *plane wave states*, we have $\hat{H}\psi = E\psi = i\hbar\frac{\partial\psi}{\partial t}$, where E is the total energy. It turns out that we can factorize the wavefunction as $\psi(x,t) = \psi(x)g(t)$. Thus if the potential is time-independent, the Schrödinger Equation becomes

$$E\psi(x)g(t) = -\frac{\hbar}{2m}\frac{\partial^2}{\partial x^2}\psi(x)g(t) + V\psi(x)g(t)$$
$$E\psi = -\frac{\hbar}{2m}\frac{\partial^2}{\partial x^2}\psi + V\psi$$

The second equation is the *Time-Independent Schrödinger Equation*. Note that we used lowercase ψ for the Time-Independent SE, in contrast to the Ψ for the Time-Dependent SE. ψ only depends on x, while Ψ depends on both x and t.

20 Week 20 (Feb 2 – Feb 6)

20.1 Solutions to the Schrödinger Equation

20.1.1 Infinite Square Well for TISE

We can solve the time-independent Schrödinger equation for a particle stuck in an infinite square well. The solutions are of the form

$$\psi_n(x) = \sqrt{\frac{2}{L}} \sin\left(\frac{n\pi x}{L}\right) \quad , \quad E_n = \frac{n^2\hbar^2\pi^2}{2mL^2}$$
$$n = 1, 2, 3, \ldots$$

Recall that the *full* solution for energy eigenstates is

$$\Psi(x,t) = \sqrt{\frac{2}{L}} e^{-iE_n t/\hbar} \psi_n(x)$$

20.1.2 Superposition

Consider the superposition of 2 energy eigenstates:

$$\Psi(x,t) = \Psi_1(x,t) + \Psi_2(x,t) = A\left(e^{-iE_1 t/\hbar}\psi_1 + e^{-iE_2 t/\hbar}\psi_2\right)$$

The probability density here is

$$\begin{aligned} p(x,t) &= \Psi^*\Psi \\ &= A^2\left(|\psi_1|^2 + |\psi_2|^2 + e^{i(E_1-E_2)t/\hbar}\psi_1\psi_2 + e^{-i(E_1-E_2)t/\hbar}\psi_1\psi_2\right) \\ &= A^2\left(|\psi_1|^2 + |\psi_2|^2 + 2\cos\left((E_1-E_2)t/\hbar\right)\psi_1\psi_2\right) \end{aligned}$$

This is a general result. Probability densities of energy eigenstates are static over time. However, superpositions of energy eigenstates have time-dependent probability densities.

20.1.3 Finite Square Well for the TISE

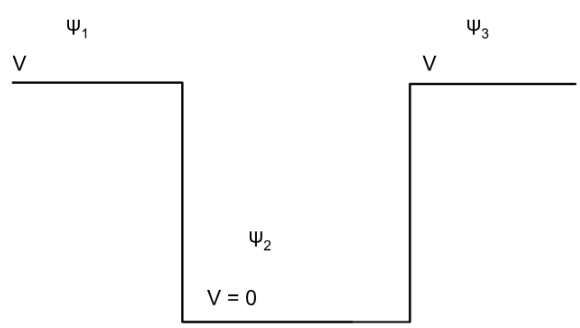

Particle in a finite square well. The potential of the "walls" is now $V \neq \infty$.

First, we write the wavefunctions for each of the three regions. For future convenience, we'll write $\psi_2(x)$ in terms of sines and cosines.

$$\begin{aligned} x < 0 : \psi_1(x) &= A_1 e^{\kappa_1 x} + B_1 e^{-\kappa_1 x} \\ 0 < x < L : \psi_2(x) &= A_2 \cos(kx) + B_2 \sin(kx) \\ x > L : \psi_3(x) &= A_3 e^{\kappa_3 x} + B_3 e^{-\kappa_3 x} \end{aligned}$$

Now we eliminate the terms that blow up as $x \to \infty$ or $x \to -\infty$.

$$\begin{aligned} \psi_1(x) &= A_1 e^{\kappa_1 x} \\ \psi_2(x) &= A_2 \cos(kx) + B_2 \sin(kx) \\ \psi_3(x) &= B_3 e^{-\kappa_3 x} \end{aligned}$$

We know that ψ and $\frac{d\psi}{dx}$ must be continuous. Thus the boundary conditions are

$$\begin{aligned} x = 0 : A_1 &= A_3 \\ x = L : A_2 \cos(kL) + B_2 \sin(kL) &= B_3 e^{-\kappa L} \end{aligned}$$

$$\begin{aligned} x = 0 : \kappa A_1 &= k B_2 \\ x = L : -k A_1 \sin(kL) + k B_2 \cos(kL) &= -\kappa B_3 e^{-\kappa L} \end{aligned}$$

Then our wavefunctions can be rewritten as

$$\begin{aligned} \psi_1(x) &= A_1 e^{\kappa x} \\ \psi_2(x) &= A_1 \left(\cos(kx) + \frac{\kappa}{k} \sin(kx) \right) \\ \psi_3(x) &= A_1 \left(\cos(kL) + \frac{\kappa}{k} \sin(kL) \right) e^{-\kappa(x-L)} \end{aligned}$$

The constraints on κ and k can also be found as

$$\frac{k}{\kappa} = \frac{1 + \frac{\kappa}{k} \tan(kL)}{\tan(kL) - \kappa}$$

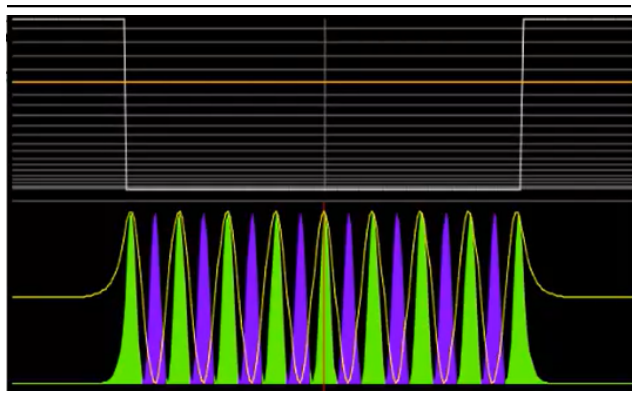

Diagram of wavefunction

The equation is quite complicated and can't be solved easily. But the important thing to notice is that even at the boundaries, there's a chance for the particle to be found. The particle can "tunnel" into the potential wall despite not having enough energy to overcome it.

20.2 Quantum Tunneling

Here we examine quantum tunneling more in depth. The diagram is similar to the finite square well, but we consider just one "wall" of potential.

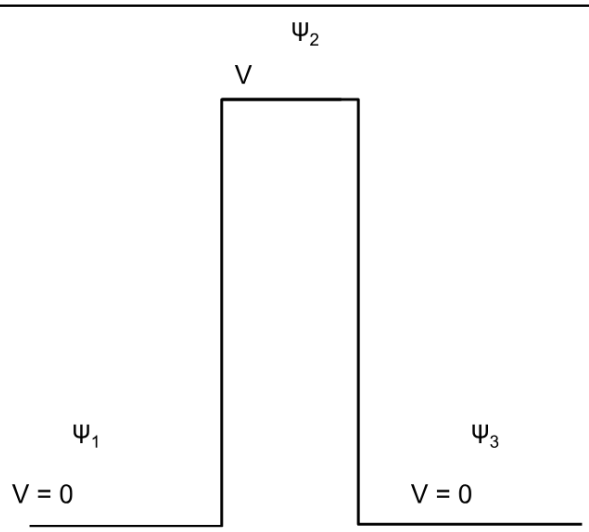

Quantum Tunneling Diagram. There's a potential barrier of width d and potential V.

The wavefunctions are:

$$V = 0 : \psi_1 = Ae^{ikx} + Be^{-ikx}$$
$$V = V : \psi_2 = Ce^{\kappa x} + De^{-\kappa x}$$
$$V = 0 : \psi_3 = Ee^{ikx}$$

where

$$k = \frac{\sqrt{2mE}}{\hbar} \quad , \quad \kappa = \frac{\sqrt{2m(V-E)}}{\hbar}$$

We require continuity of ψ and $\frac{d\psi}{dx}$ at $x = 0$ and $x = d$, resulting in 4 boundary conditions:

$$\begin{aligned} x = 0 &: A + B = C + D \\ x = d &: Ce^{\kappa d} + De^{-\kappa d} = Ee^{ikd} \end{aligned}$$

$$\begin{aligned} x = 0 &: A - B = \left(-i\frac{\kappa}{k}\right)(C - D) \\ x = d &: Ce^{\kappa d} - De^{-\kappa d} = \left(i\frac{k}{\kappa}\right) Ee^{ikd} \end{aligned}$$

After a lot of complicated algebra, we can find A in terms of E:

$$A = \frac{E}{4}e^{ikd}\left[\cosh(\kappa d) + \frac{i}{2}\sinh(\kappa d)\left(\frac{k}{\kappa} - \frac{\kappa}{k}\right)\right]$$

The fraction that tunnels is $\left|\frac{E}{A}\right|^2$. Thus

$$\begin{aligned} \left|\frac{A}{E}\right|^2 &= \cosh^2(\kappa d) + \frac{1}{4}\sinh^2(\kappa d)\left(\frac{k}{\kappa} - \frac{\kappa}{k}\right)^2 \\ &= 1 + \frac{1}{4}\sinh^2(\kappa d)\left(\frac{k}{\kappa} + \frac{\kappa}{k}\right)^2 \\ &= 1 + \sinh^2(\kappa d)\left(\sqrt{\frac{E}{V-E}} + \sqrt{\frac{V-E}{E}}\right)^2 \\ &= 1 + \frac{1}{4}\frac{V^2}{E(V-E)}\sinh^2(\kappa d) \end{aligned}$$

Noting that $\sinh^2(\kappa d) \sim e^{2\kappa d}$ for small κd, the tunneling fraction is

$$T = \left|\frac{E}{A}\right|^2 \sim \frac{4E(V-E)}{V^2}e^{-2\kappa d}$$

Classically, the particle can't tunnel through a potential if it doesn't have enough energy. Quantum mechanically, the particle can.

20.3 Physical Realization of Quantum Computers

20.3.1 DiVincenzo Criteria

These are 7 conditions necessary for a universal quantum computer, proposed in 1996 by DiVincenzo. We focus on the first 5, which are required for quantum computation. The remaining 2 are required for quantum communication.

1) **Qubits:** Scalable systems, identifiable as weakly interacting 2-state systems. Must clearly identify & lable qubits.
2) **Initialization:** Must be able to set all qubits to initial state, e.g. $|0\rangle^{\otimes n}$.
3) **Robustness:** Qubits must be able to hold their state; ward off decoherence.*
4) **Gates:** Must have a universal set of unitary gates able to act on system (including 2-qubit interactions for measurement).
5) **Measurement:** Must be able to make "strong" measurements of each qubit, i.e. ones that collapse qubit into measured state.

*How long qubits hold their coherence (on average) is known as the "coherence time" τ_Q.

20.3.2 Criteria to Examine Implementations

Another set of criteria to judge implementations of quantum computers are given below, from *Quantum Computing: An Applied Approach* by J. D. Hidary (section 5.1):

1) **Universality:** Can the system represent universal quantum computation?
2) **Fidelity:** Measure of how well the qubit can function (w.r.t. errors, decoherence)
3) **Scalability:** Is it possible to scale to more than 10^6 qubits?
4) **Qubits:** Are we limited to nearest neighbor interactions? Can multiple qubits be operated on simultaneously?
5) **Circuit depth:** How many operations can we perform before coherence is lost?
6) **Logical connectivity:** Are there limits to gates, especially 2-qubit gates?
7) **Cloud access** (won't look at this now)

Currently, we're in the "Noisy Intermediate-Scale Quantum" (NISQ) regime: We have $n_{qubits} \sim 50-100$ qubits, and can perform $n_{ops} \sim 20 - 30$ operations.

There's a lot of different ways to implement quantum computation. In this course, we'll focus on NMR, Photonics, and Superconducting Qubits.

21 Week 21 (Feb 9 – Feb 13)

21.1 Rabi Oscillations & NMR

Isidor Rabi won a Nobel Prize for his work on nuclear magnetic resonance (NMR). Here we'll work towards a general result in 3 stages:

1. Precession in x-direction, static field
2. Precession in general direction, static field
3. Precession in general direction, time-varying field

21.2 Precession in x-Direction, Static Field

21.2.1 Setup

Consider a spin-$\frac{1}{2}$ particle in a static magnetic field. Maybe an electron. The Hamiltonian (describing total energy of the system) is

$$H = -\vec{\mu} \cdot \vec{B}$$

Let the static magnetic field point in the z-direction: $\vec{B} = B_0\hat{z}$. We define the magnetic moment as $\vec{\mu} = -g\frac{e}{2m}\vec{S}$ for an electron. $\vec{S}$ is the spin, which for the electron is $\vec{S} = \frac{\hbar}{2}\sigma$ and σ is a Pauli matrix. g is called the g-factor, and we'll say it's around 2 for an electron. In reality, it's a bit different, and its value is calculated very precisely with Quantum Field Theory.

Solving the Hamiltonian with B in the z-direction,

$$\begin{aligned} H &= -\vec{\mu}\cdot\vec{B} \\ &= g\frac{e}{2m}\vec{S}\cdot\vec{B} \\ &\approx \frac{eB_0}{m}S_z \end{aligned}$$

Let $\omega_0 = \frac{eB_0}{m}$. Then the Hamiltonian becomes

$$H = \omega_0 S_z = \frac{\hbar\omega_0}{2}\sigma_z$$

The eigenvalues of this Hamiltonian represent the allowed energy levels:

$$H = \frac{\hbar\omega_0}{2}\begin{pmatrix} 1 & 0 \\ 0 & -1 \end{pmatrix}$$

$$\begin{cases} H\left|+\right\rangle = \frac{\hbar\omega_0}{2}\left|+\right\rangle \longrightarrow E_+ = \frac{\hbar\omega_0}{2} \\ H\left|-\right\rangle = -\frac{\hbar\omega_0}{2}\left|-\right\rangle \longrightarrow E_- = -\frac{\hbar\omega_0}{2} \end{cases}$$

21.2.2 Larmor Precession

Now consider the time-evolution of a system in a general direction. The initial state given by $t = 0$ in a general direction $\hat{n}$ is

$$\left|\psi(0)\right\rangle = \left|+\right\rangle_n = \cos\left(\frac{\theta}{2}\right)\left|+\right\rangle + e^{i\phi}\sin\left(\frac{\theta}{2}\right)\left|-\right\rangle$$

Side note: the halving of θ has to do with the structure of Hilbert space. We want to map 0 to π on the Bloch sphere with all possible orientations. Anyways, since the Hamiltonian is time-independent, the time evolution of the system is

$$\begin{aligned} \left|\psi(t)\right\rangle &= e^{-iHt/\hbar}\left|\psi(0)\right\rangle \\ &= e^{-iE_+t/\hbar}\cos\left(\frac{\theta}{2}\right)\left|+\right\rangle + e^{-iE_-t/\hbar}e^{i\phi}\sin\left(\frac{\theta}{2}\right)\left|-\right\rangle \\ &= e^{-i\omega_0 t/2}\cos\left(\frac{\theta}{2}\right)\left|+\right\rangle + e^{i(\omega_0 t/2+\phi)}\sin\left(\frac{\theta}{2}\right)\left|-\right\rangle \\ &= e^{-i\omega_0 t/2}\left(\cos\left(\frac{\theta}{2}\right)\left|+\right\rangle + e^{i(\omega_0 t+\phi)}\sin\left(\frac{\theta}{2}\right)\left|-\right\rangle\right) \end{aligned}$$

The probability to measure the wavefunction along the z-axis is $\cos^2\left(\frac{\theta}{2}\right)$, as given by the Born rule.

Along the x-axis, the probability can be found using symmetry of HV and PM bases:

$$\begin{aligned} P_{+,x} &= |_x \langle +|\psi(t)\rangle|^2 \\ &= \left| \frac{1}{\sqrt{2}} \begin{pmatrix} 1 & 1 \end{pmatrix} \begin{pmatrix} \cos\frac{\theta}{2} \\ e^{i(\omega_0 t+\phi)} \sin\frac{\theta}{2} \end{pmatrix} \right|^2 \\ &= \frac{1}{2}\left(1 + \sin(\theta)\cos(\phi + \omega_0 t)\right) \end{aligned}$$

The probability depends on time. This is called *Larmor precession*, and ω_0 is the *Larmor frequency*.

21.3 Precession in General Direction, Static Field

21.3.1 Setup

Now consider precession in a general direction with respect to $\hat{z}$ and $\hat{x}$. The magnetic field is

$$\vec{B} = B_0\hat{z} + B_1\hat{x}$$

and we define the frequencies $\omega_0 = \frac{eB_0}{m}$, $\omega_1 = \frac{eB_1}{m}$. The Hamiltonian of the system is

$$\begin{aligned} H &= -\vec{\mu}\cdot\vec{B} \\ &= \omega_0 S_z + \omega_1 S_x \\ &= \frac{\hbar}{2}\begin{pmatrix} \omega_0 & \omega_1 \\ \omega_1 & -\omega_0 \end{pmatrix} \end{aligned}$$

Define $\tan\theta = \frac{B_1}{B_0} = \frac{\omega_1}{\omega_0}$. Then we can write the Hamiltonian as

$$H = \frac{\hbar}{2}\sqrt{\omega_0^2 + \omega_1^2}\begin{pmatrix} \cos\theta & \sin\theta \\ \sin\theta & -\cos\theta \end{pmatrix} = \sqrt{\omega_0^2 + \omega_1^2} S_n$$

Here S_n is the spin vector in the general $\hat{n}$ direction. The eigenvalues of the Hamiltonian correspond to the system's allowed energy levels:

$$E_\pm = \pm\frac{\hbar}{2}\sqrt{\omega_0^2 + \omega_1^2}$$

$$\begin{cases} |+\rangle_n = \cos\frac{\theta}{2}|+\rangle + \sin\frac{\theta}{2}|-\rangle \\ |-\rangle_n = \cos\frac{\theta}{2}|+\rangle - \sin\frac{\theta}{2}|-\rangle \end{cases}$$

Note that θ here ($\tan\theta = \omega_1/\omega_0$) isn't defined the same as the θ in Larmor precession (angle on Bloch sphere).

21.3.2 Rabi's Formula, Spin Flip

Initially, the system is in the state

$$|\psi(0)\rangle = |+\rangle_n = \cos\frac{\theta}{2}|+\rangle + \sin\frac{\theta}{2}|-\rangle$$

After time evolution, the system becomes

$$|\psi(t)\rangle = e^{-iE_+t/\hbar}\cos\frac{\theta}{2}|+\rangle + e^{-iE_-t/\hbar}\sin\frac{\theta}{2}|-\rangle$$

An interesting consideration is the probability for the state to flip to $|-\rangle$. The probability is given by

$$\begin{aligned}
P_{+\to-} &= |\langle -|\psi(t)\rangle|^2 \\
&= \left|e^{-iE_+t/\hbar}\cos\frac{\theta}{2}\langle -|+\rangle_n + e^{-iE_-t/\hbar}\sin\frac{\theta}{2}\langle -|-\rangle_n\right|^2 \\
&= \left|e^{-iE_+t/\hbar}\cos\frac{\theta}{2}\sin\frac{\theta}{2} + e^{-iE_-t/\hbar}\sin\frac{\theta}{2}\left(-\cos\frac{\theta}{2}\right)\right|^2 \\
&= \cos^2\frac{\theta}{2}\sin^2\frac{\theta}{2}|1-e^{i(E_++E_-)t/\hbar}|^2 \\
&= \sin^2\theta\sin^2\left(\frac{\sqrt{\omega_0^2+\omega_1^2}}{2}t\right)
\end{aligned}$$

Thus the probability oscillates as

$$P_{+\to-} = \frac{\omega_1^2}{\omega_0^2+\omega_1^2}\sin^2\left(\frac{\sqrt{\omega_0^2+\omega_1^2}}{2}t\right)$$

This is *Rabi's formula*, and it has important applications in NMR.

21.4 Precession in General Direction, Time-Varying Field

21.4.1 Setup

If the field itself is time-varying, it gets more complicated. First, consider a time-varying magnetic field. This is modeled as

$$\vec{B} = B_0\hat{z} + B_1\cos(\omega t)\hat{x} + B_1\sin(\omega t)\hat{y}$$

The frequencies are defined as $\omega_0 = \frac{eB_0}{m}$ and $\omega_1 = \frac{eB_1}{m}$. The Hamiltonian of the system is given by

$$\begin{aligned}
H &= -\vec{\mu}\cdot\vec{B} \\
&= \omega_0 S_z + \omega_1\left[\cos(\omega t)S_x + \sin(\omega t)S_y\right] \\
&= \frac{\hbar}{2}\begin{pmatrix}\omega_0 & \omega_1 e^{-i\omega t} \\ \omega_1 e^{i\omega t} & -\omega_0\end{pmatrix}
\end{aligned}$$

21.4.2 Spin Flopping

Since the Hamiltonian is time-varying, we have to use the time-dependent Schrodinger equation. Let the state be given by

$$|\psi(t)\rangle = c_+(t)|+\rangle + c_-(t)|-\rangle$$

Then applying the Schrodinger equation, we have

$$i\hbar\frac{d}{dt}\left|\psi(t)\right\rangle = H(t)\left|\psi(t)\right\rangle$$
$$i\hbar\begin{pmatrix}\dot{c}_+\\ \dot{c}_-\end{pmatrix} = \frac{\hbar}{2}\begin{pmatrix}\omega_0 & \omega_1 e^{-i\omega t}\\ \omega_1 e^{i\omega t} & -\omega_0\end{pmatrix}\begin{pmatrix}c_+\\ c_-\end{pmatrix}$$
$$\begin{cases} i\hbar\dot{c}_+ = \dfrac{\hbar\omega_0}{2}c_+ + \dfrac{\hbar\omega_1}{2}e^{-i\omega t}c_- \\ i\hbar\dot{c}_- = \dfrac{\hbar\omega_1}{2}e^{i\omega t}c_+ - \dfrac{\hbar\omega_0}{2}c_- \end{cases}$$

This is a coupled differential equation. There are some techniques to solve this, but here we'll transform to the "rotating basis" where the B field is constant. Define $\alpha_+(t) = e^{i\omega t/2}c_+(t)$ and $\alpha_-(t) = e^{-i\omega t/2}c_-(t)$. Then

$$\begin{cases} i\hbar\dot{\alpha}_+ e^{-i\omega t/2} + \hbar\dfrac{\omega}{2}\alpha_+ e^{-i\omega t/2} = \dfrac{\hbar\omega_0}{2}\alpha_+ e^{-i\omega t/2} + \dfrac{\hbar\omega_1}{2}\alpha_- e^{-i\omega t/2} \\ i\hbar\dot{\alpha}_- e^{i\omega t/2} - \hbar\dfrac{\omega}{2}\alpha_- e^{i\omega t/2} = \dfrac{\hbar\omega_1}{2}\alpha_+ e^{i\omega t/2} - \dfrac{\hbar\omega_0}{2}\alpha_- e^{i\omega t/2} \end{cases}$$

The good thing here is that we can cancel out $e^{-i\omega t}$ and $e^{i\omega t}$, respectively, and get a time-independent equation:

$$\begin{cases} i\hbar\dot{\alpha}_+ = \dfrac{\hbar(\omega_0-\omega)}{2}\alpha_+ + \dfrac{\hbar\omega_1}{2}\alpha_- \\ i\hbar\dot{\alpha}_- = \dfrac{\hbar\omega_1}{2}\alpha_+ - \dfrac{\hbar(\omega_0-\omega)}{2}\alpha_- \end{cases}$$

Define $\Delta\omega = \omega - \omega_0$ to get

$$i\hbar\frac{d}{dt}\begin{pmatrix}\alpha_+\\ \alpha_-\end{pmatrix} = \frac{\hbar}{2}\begin{pmatrix}-\Delta\omega & \omega_1\\ \omega_1 & \Delta\omega\end{pmatrix}\begin{pmatrix}\alpha_+\\ \alpha_-\end{pmatrix}$$

Note that this has the form of the Schrodinger equation, but the "Hamiltonian" is time-independent.

Since the Hamiltonian is time-independent, we can use Rabi's formula to get the probability for spin flip. Assume the wavefunction is initially $|\psi(0)\rangle = |+\rangle$. Then the probability for the spin to flip to $|-\rangle$ is

$$P_{+\to-} = |\left\langle -|\psi(t)\right\rangle|^2 = |c_-(t)|^2 = |\alpha_-(t)|^2$$

Apply Rabi's formula from the previous section. The probability for spin flip (now called "spin flop") is

$$P_{+\to-} = \frac{\omega_1^2}{(\omega-\omega_0)^2+\omega_1^2}\sin^2\left(\frac{\sqrt{(\omega-\omega_0)^2+\omega_1^2}}{2}t\right)$$

For the probability to flip to become 1, we need $\omega = \omega_0$. That is, we must achieve *resonance*. Additionally, we need $\omega_1 t = n\pi$. This is called a π-pulse. The applied field does not need to be strong, we just need to apply the field for a long enough time.

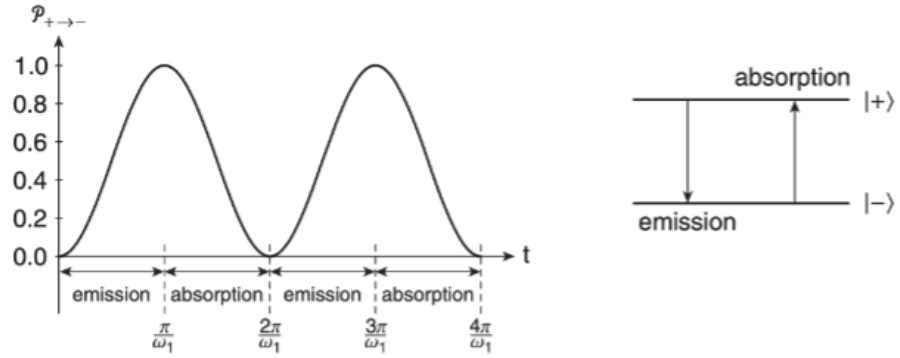

Spin flopping. The probability oscillates and reaches 1 every π-pulse.

21.5 Brief Note: Physical Realization of NMR

The main idea is to create a time-varying B field with a Helmholtz coil and RF coil. This is used to create the necessary circuits.

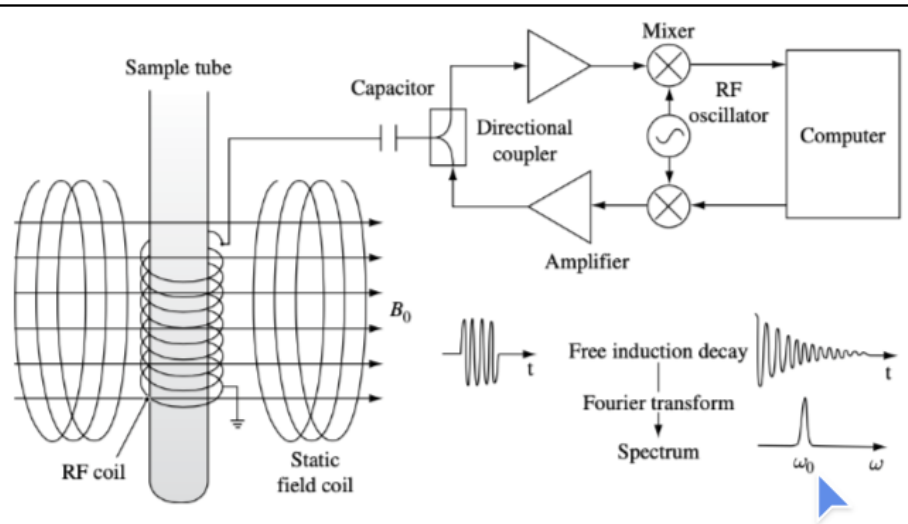

NMR Circuit Diagram

NMR can be applied in several fields, not just limited to quantum computing. It's a good physics concept to know.

- Quantum computing
- MRI (uses inhomogeneous B field)
- Determining structure of compounds in chemistry & biochemistry
- Geology, magnetometers, water detection
- Finding petroleum & natural gas deposits

22 Week 22 (Feb 16 – Feb 20)

22.1 Trapped Ions

Trapped ions are another way to physical realize quantum computers, like NMR attempts to do.

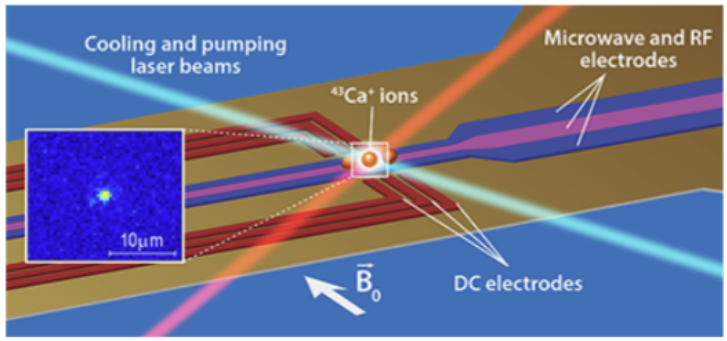

Trapped ions schematic

Ions are held in a "Paul trap" by electric fields. Qubits are encoded in two properties of an ion: vibrational state and spin state. So each ion has the potential to represent two distinct qubits.

Laser pulses manipulate the vibrational state ("phonons"). They can initialize the vibrational state to the ground state. RF pulses manipulate the spin state, just like in NMR with Rabi oscillations.

The Hamiltonian of the system (without interactions; free particle) is

$$H_0 = \underbrace{\hbar\omega_0 S_z}_{\text{spin}} + \underbrace{\hbar\omega_z a^\dagger a}_{\text{vibrational}}$$

The first term is just the spin state. The second is the Hamiltonian for the harmonic oscillator.

22.2 Quantum Harmonic Oscillator

22.2.1 Schrodinger Equation

The potential energy of a simple harmonic oscillator in 1 dimension is $V(x) = \frac{1}{2}kx^2$. Now let's consider a quantum harmonic oscillator. Express the potential as $V(x) = \frac{1}{2}m\omega^2 x^2$. Plug the potential into the Schrodinger equation to get

$$\hat{H}\psi = E\psi = \frac{\hat{P}^2}{2m}\psi + \frac{1}{2}m\omega^2\hat{X}^2\psi$$

Recall the operators $\hat{X} = x$ and $\hat{P} = -i\hbar\frac{d}{dx}$ to get

$$E\psi = \hbar\omega\left(\frac{\hat{P}^2}{2m\hbar\omega} + \frac{m\omega}{2\hbar}\hat{X}^2\right)\psi$$

22.2.2 Ladder Operators

To solve the above equation, introduce the ladder operators a, $a^\dagger$:

$$a = \left(i\frac{\hat{P}}{\sqrt{2m\hbar\omega}} + \sqrt{\frac{m\omega}{2\hbar}}\hat{X} \right)$$
$$a^\dagger = \left(-i\frac{\hat{P}}{\sqrt{2m\hbar\omega}} + \sqrt{\frac{m\omega}{2\hbar}}\hat{X} \right)$$

Now it's tempting to write the Schrodinger equation as $E\psi = \hbar\omega a^\dagger a\psi$. But $\hat{P}$ and $\hat{X}$ don't commute, and neither do $a^\dagger$ and a. We can still simplify the Schrodinger equation, though – we just end up with an additional constant.

$$E\psi = \hbar\omega \left(a^\dagger a + \frac{1}{2} \right) \psi$$

The commutator is

$$[a, a^\dagger] = \frac{i}{\hbar}(-i\hbar) = 1$$

22.2.3 Energy Eigenstates

First, examine the energy of the state $\psi' = a^\dagger \psi_E$. By plugging that in, we get

$$E'\psi' = \hbar\omega \left(a^\dagger a + \frac{1}{2} \right) \psi'$$
$$a^\dagger E'\psi_E = \hbar\omega \left(a^\dagger a a^\dagger + \frac{1}{2}a^\dagger \right) \psi_E = a^\dagger \hbar\omega \left(a a^\dagger + \frac{1}{2} \right) \psi_E$$

Use the commutator $[a, a^\dagger]$ to simplify:

$$a^\dagger E'\psi_E = a^\dagger \hbar\omega \left(a^\dagger a + \frac{1}{2} \right) \psi_E + a^\dagger \hbar\omega\psi_E$$
$$E' = E + \hbar\omega$$

Applying $a^\dagger$ raises the energy by $\hbar\omega$.

Next, consider the state $\psi'' = a\psi_E$. A similar calculation shows that the energy is

$$E'' = E - \hbar\omega$$

Applying $a^\dagger$ lowers the energy by $\hbar\omega$. But there must be a ground state, one with the minimum non-negative energy. To find that ground state, go back to the Schrodinger equation and expand the parentheses:

$$E_g\psi_g = \hbar\omega \left(a^\dagger a + \frac{1}{2} \right) \psi_g$$
$$= \hbar\omega \left(a^\dagger a \right) \psi_g + \frac{1}{2}\hbar\omega\psi_g$$

At the ground state, attempting to go lower just results in zero energy. So $a\psi_g = 0$.

$$E_g = \frac{1}{2}\hbar\omega$$

What we learned:

1. The energy of the QHO is quantized, in packets of $\hbar\omega$.
2. $a^\dagger$ raises the energy by $\hbar\omega$.
3. a lowers the energy by $\hbar\omega$.
4. The ground state has energy $E_g = \frac{1}{2}\hbar\omega$.

23 Week 23 (Feb 23 – Feb 27)

A skim since the concepts take too long to explain otherwise. Just get a sense for how it works broadly.

23.1 Superconductors

23.1.1 Cooper Pairs

Consider an electromagnetic field made up of a large number of bosons (integer spin). It turns out that the electric field acts like a probability amplitude, where $n(r)$ is the number of particles.

$$|\vec{E}(r)| \approx n(r)\hbar\omega$$
$$\vec{E}(r) \approx \sqrt{4\pi\hbar\omega}\sqrt{n(r)}e^{i\theta(r)}$$

If the temperature is low enough, Cooper pairs can form. These are bound pairs of electrons. Assume there's n Cooper pairs within the ring. Then the wavefunction for each pair is

$$\Psi^*\Psi \sim n$$
$$\psi = \sqrt{n}e^{i\theta(r)}$$

Note that there's a phase, $\theta(r)$.

23.1.2 London Equations

Now we'll start building up to the Meissner effect. It's pretty cool; the most common demonstration is levitating things.

The main feature is superconductivity: when cooled down sufficiently, certain materials exhibit zero electrical resistance and expel magnetic fields. First, consider the Lagrangian of a particle in a magnetic field:

$$L = T - V = \frac{1}{2}mv^2 - q\phi + q\vec{v}\cdot\vec{A}$$

Here $\vec{A}$ is the vector potential for the magnetic field, satisfying $\vec{B} = \nabla \times \vec{A}$. The Euler-Lagrange equation yields $\vec{F} = q(\vec{E} + \vec{v} \times \vec{B})$. The canonical momentum is

$$p_i = \frac{\partial L}{\partial \dot{x}_i} = mv_i + qA_i$$

Substitute that into the Lagrangian to find the Hamiltonian:

$$H = \frac{1}{2m}\left(\vec{p} + q\vec{A}\right)^2$$

The effective momentum is $m\vec{v} = (\vec{p} - q\vec{A})$. Substitute the momentum operator from quantum mechanics to get

$$\vec{v} = \frac{1}{m}\left(-i\hbar\nabla - q\vec{A}\right)$$

The current density is (charge) x (particle flux), where the charge is q and the particle flux is $\psi^* v \psi$ with $\psi = \sqrt{n}e^{i\theta(r)}$.

$$\vec{j} = \frac{nq}{m} \cdot e^{-i\theta(r)}\left(-i\hbar\nabla - q\vec{A}\right)e^{i\theta(r)} = \frac{nq}{m}\left(\hbar\nabla\theta(r) - q\vec{A}\right)$$

Take the curl of both sides, so that $\vec{B} = \nabla \times \vec{A}$ and $\nabla \times \nabla\theta = 0$.

$$\nabla \times \vec{j} = -\frac{nq^2}{mc}\vec{B}$$

This is the **London equation**. Now consider Maxwell's equations: $\nabla \times \vec{B} = \mu_0\vec{j}$. Taking the curl gives us $\nabla \times \nabla \times \vec{B} = \mu_0 \nabla \times \vec{j}$. Substitute that into the London equation to get

$$-\nabla^2\vec{B} = -\mu_0\frac{mc}{nq^2}\vec{B}$$

$$\nabla^2\vec{B} = \frac{1}{\lambda_L^2}\vec{B}\ , \quad \lambda_L = \sqrt{\frac{\epsilon_0 mc^2}{nq^2}}$$

23.1.3 Meissner Effect

Solutions to the above equation are of the form $B(r) = B_0 e^{-x/\lambda_L}$.

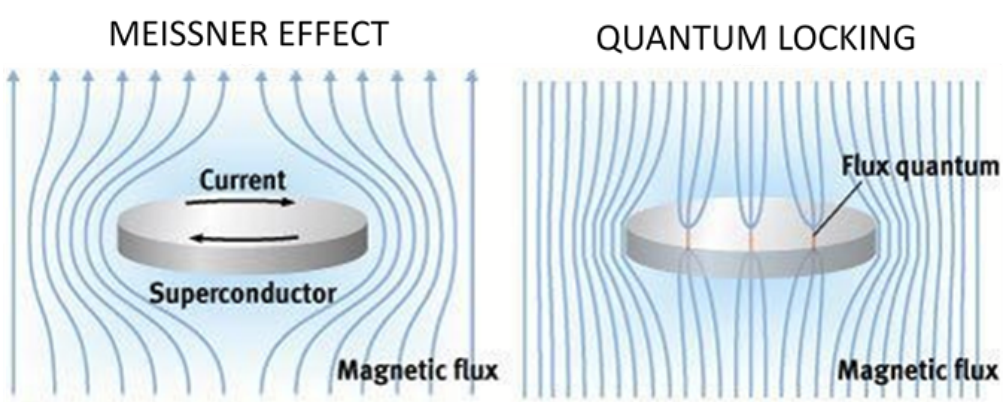

Meissner Effect & Quantum Locking

Below their critical temperature (i.e. when Cooper pairs form), magnetic fields are expelled from the superconductor. Note that $\vec{j} = 0$ within the superconductor.

We can also introduce impurities into the semiconductor, so that some magnetic fields can penetrate. This is called "quantum locking," and now the superconductor "locks" into place (i.e. it can't be easily shoved over or slide off).

Here's a demonstration: https://www.youtube.com/watch?v=HRLvVkkq5GE

23.2 Flux Quantization

Consider a ring of superconducting material. Recall the current density

$$\vec{j} = \frac{nq}{m}\left(\hbar\nabla\theta(r) - q\vec{A}\right)$$

For there to be no current within the superconductor, we need

$$\hbar\nabla\theta(r) = q\vec{A}$$
$$\hbar\oint_C \nabla\theta\cdot d\vec{l} = q\oint_C \vec{A}\cdot d\vec{l}$$

But what's the gradient of $\theta(r)$? The change in phase going around the ring is

$$\oint_C \nabla\theta\cdot d\vec{l} = \theta_2 - \theta_1$$

Recall the Cooper pair wavefunction $\psi = \sqrt{n}e^{i\theta(r)}$. The wavefunction needs to be single-valued, so $\theta_2 - \theta_1 = 2\pi n$.

To simplify the RHS, use the divergence theorem and let Φ denote the magnetic flux:

$$\oint_C \vec{A}\cdot d\vec{l} = \int_C (\nabla\times\vec{A})\cdot d\vec{a} = \int_C \vec{B}\cdot d\vec{a} = \Phi$$

Our equation becomes

$$\Phi = \frac{2\pi\hbar}{q}n\ , \quad n = 0, 1, 2, \ldots$$

Thus, the magnetic flux is **quantized**. Inserting $q = -2e$ for Cooper pairs gives $\Phi_0 \approx 2.0678 \times 10^{-15}\ Tm^2$ as the flux quantum.

23.3 Josephson Junction

A Josephson junction is formed by putting two superconductors close to each other (but not touching). Then Cooper pairs can tunnel through the gap, which creates a current without requiring any voltage.

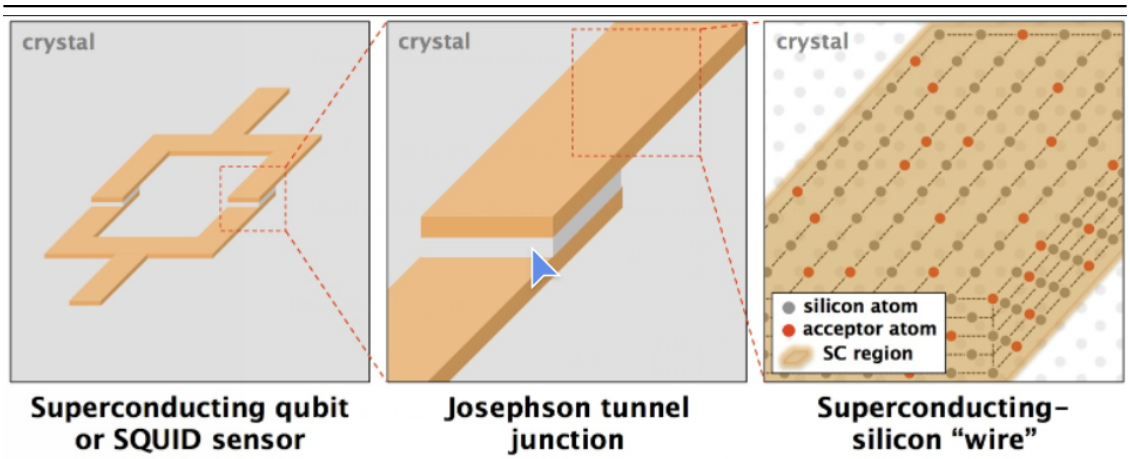

Josephson Junction Diagram

The Schrodinger equation of Cooper pairs on each side of the junction is

$$1)\ \ i\hbar\frac{\partial\psi_1}{\partial t} = \hbar T\psi_2$$
$$2)\ \ i\hbar\frac{\partial\psi_2}{\partial t} = \hbar T\psi_1$$

where $\hbar T$ is the transfer interaction across the junction. Use the previous Cooper pair wavefunction form $\psi = \sqrt{n}e^{i\theta(r)}$.

$$1)\ \ \frac{\partial\psi_1}{\partial t} = \frac{1}{2\sqrt{n_1}}e^{i\theta_1}\frac{\partial n_1}{\partial t} + i\psi_1\frac{\partial\theta_1}{\partial t} = -iT\psi_2$$
$$2)\ \ \frac{\partial\psi_2}{\partial t} = \frac{1}{2\sqrt{n_2}}e^{i\theta_2}\frac{\partial n_2}{\partial t} + i\psi_2\frac{\partial\theta_2}{\partial t} = -iT\psi_1$$

Let $\delta = \theta_2 - \theta_1$. Plug that in, then equate the real and imaginary parts to get

$$1)\ \ \frac{\partial n_1}{\partial t} = 2T\sqrt{n_1 n_2}\sin\delta\ \ , \qquad \frac{\partial n_2}{\partial t} = -2T\sqrt{n_1 n_2}\sin\delta$$
$$2)\ \ \frac{\partial\theta_1}{\partial t} = -T\sqrt{\frac{n_2}{n_1}}\cos\delta\ \ , \qquad \frac{\partial\theta_2}{\partial t} = -T\sqrt{\frac{n_1}{n_2}}\cos\delta$$

If the superconductors are the same shape (like in a ring, e.g.), then $n_1 \approx n_2$. The current flow across the junction is $\sim \frac{\partial n_2}{\partial t}$, thus

$$J = J_0\sin\delta = J_0\sin(\theta_2 - \theta_1)$$

No external voltage was used to get this current. This is the **Josephson effect**.

Recall from flux quantization that $\theta_2 - \theta_1 = 2\pi n = \frac{2e}{\hbar}\Phi$. Then the Josephson effect current is $J = J_0\sin(\frac{2e}{\hbar}\Phi) = J_0\sin\left(\frac{\Phi}{\Phi_0}\right)$.

Recall the LC circuit harmonic oscillator:

$$H_{LC} = \frac{Q^2}{2C} + \frac{\Phi^2}{2L}$$

The Josephson junction is similar to this. Since $J = \Phi/L$, we have

$$L(\Phi) = \left(\frac{\partial J}{\partial \Phi}\right)^{-1} = \frac{\Phi_0}{2\pi J_0 \cos(\Phi/\Phi_0)}$$
$$\frac{\Phi^2}{2L} \longrightarrow \frac{1}{2} J_0 \cos\frac{\Phi}{\Phi_0}$$

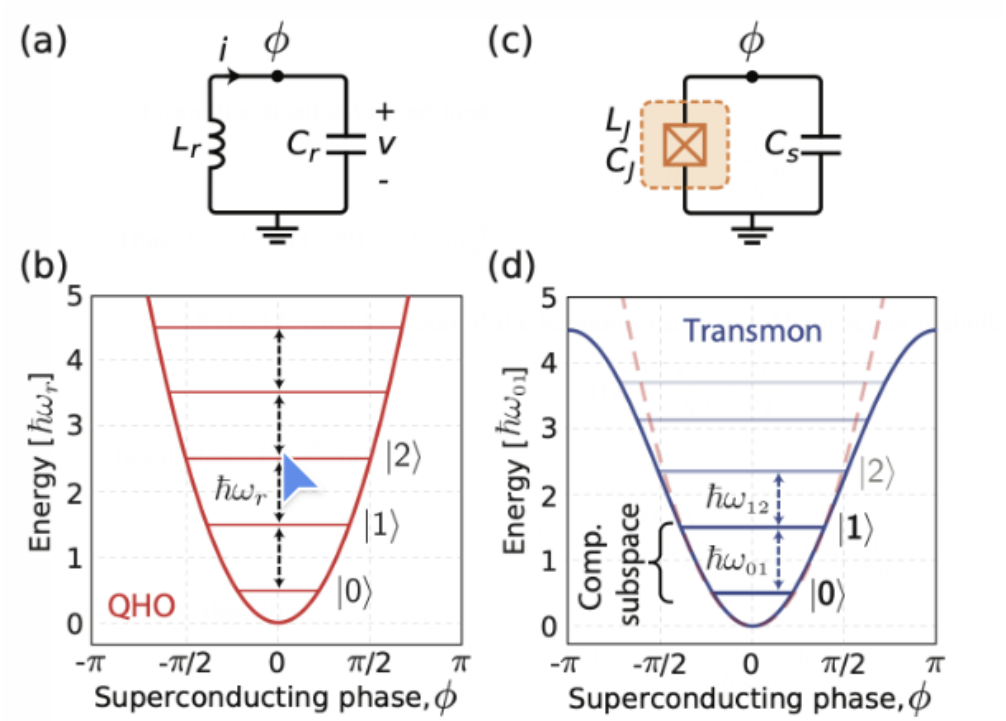

Quadratic vs. cosine potential

The reason this is useful: the normal quantum harmonic oscillator (quadratic potential) has equally spaced energy levels. If the potential is a cosine, the energy levels are spaced differently. But to make a qubit, we only want to energy levels, $|0\rangle$ and $|1\rangle$. Thus, a cosine potential works better.

23.4 Taste of Particle Physics

23.4.1 Constants of Motion

First, note the Schrodinger equation in both its ket and bra form:

$$i\hbar\frac{\partial}{\partial t}|\psi\rangle = H|\psi\rangle \longrightarrow \frac{\partial}{\partial t}|\psi\rangle = -\frac{i}{\hbar}H|\psi\rangle$$
$$-i\hbar\frac{\partial}{\partial t}\langle\psi| = \langle\psi|H \longrightarrow \frac{\partial}{\partial t}\langle\psi| = \frac{i}{\hbar}\langle\psi|H$$

For some observable Q, we can find

$$\begin{aligned}\frac{d}{dt}\langle\psi|Q|\psi\rangle &= \left(\frac{\partial}{\partial t}\langle\psi|\right)Q|\psi\rangle + \langle\psi|Q\left(\frac{\partial}{\partial t}|\psi\rangle\right) + \langle\psi|\frac{\partial Q}{\partial t}|\psi\rangle \\ &= \frac{i}{\hbar}\langle\psi|HQ|\psi\rangle - \frac{i}{\hbar}\langle\psi|QH|\psi\rangle \\ &= \frac{i}{\hbar}[H,Q]\end{aligned}$$

Where we let $\dot{Q} = 0$. This is the **Ehrenfest theorem**. To see whether an observable Q is a "constant of the motion," we take the commutator. If $[H,Q] = 0$, then Q is a constant of motion.

23.4.2 Indistinguishable Particles

For a "particle 1" and "particle 2," the Hamiltonian should be the same regardless of order, by symmetry: $H(1,2) = H(2,1)$. Thus, if the particles don't interact,

$$\begin{aligned}&1)\ \ H\psi(1,2) = E\psi(2,1) \\ &2)\ \ H\psi(2,1) = E\psi(1,2)\end{aligned}$$

Now define the swap operator P_{12}, such that $P_{12}\psi(1,2) = \psi(2,1)$. Then $HP_{12} = P_{12}H$. I.e. P_{12}, the symmetry under exchange of particles, is a constant of motion.

Consider swapping twice. Then $P_{12}P_{12}\psi(1,2) = \psi(1,2)$. Thus, P_{12} has eigenvalues ± 1. The eigenvectors for two particles are

$$\begin{aligned}&1)\ \ P_{12}\frac{\psi(1,2)+\psi(2,1)}{\sqrt{2}} = \frac{\psi(1,2)+\psi(2,1)}{\sqrt{2}} \\ &2)\ \ P_{12}\frac{\psi(1,2)-\psi(2,1)}{\sqrt{2}} = -\frac{\psi(1,2)-\psi(2,1)}{\sqrt{2}}\end{aligned}$$

23.4.3 Bosons and Fermions

Since P_{12} is a constant of motion, the symmetry for a particle remains. We have two particle types: symmetry & antisymmetric.

$$\begin{aligned}&1)\ \ \psi^S(1,2) = \frac{1}{\sqrt{2}}\left(\psi(1,2)+\psi(2,1)\right) \\ &2)\ \ \psi^A(1,2) = \frac{1}{\sqrt{2}}\left(\psi(1,2)-\psi(2,1)\right)\end{aligned}$$

In quantum field theory, the integer spin particles (bosons) are ψ^S and half-integer spin particles (fermions) are ψ^A.

Bosons: $j\hbar$, obey Bose-Einstein statistics

- Boson clumping
- γ, Z^0, $W^\pm$, Cooper pair, etc.

Fermions: $\frac{j}{2}\hbar$, obey Fermi-Dirac statistics

- Pauli exclusion principle
- $e^\pm$, $\mu^\pm$, $\tau^\pm$, etc.

23.4.4 Pauli Exclusion Principle

This only works for fermions (half integer spin). The idea is to express each wavefunction as a product of position space and spin. Both can be either symmetric or antisymmetric.

$$\Psi(1,2) = \psi(x,t) \otimes \chi$$

For bosons, we need Ψ^S. This is achieved with either $\Psi^S = \psi^S \chi^S$ or $\Psi^S = \psi^A \chi^A$. Particles 1 and 2 can be in the same state of χ^S and ψ^S. This is called **boson clumping**.

For fermions, we need Ψ^A. This is achieved with either $\Psi^A = \psi^S \chi^A$ or $\Psi^A = \psi^A \chi^S$.

Note that if two fermions are in the same spin state, i.e. $\chi(1,2) = \chi(2,1)$, then

$$\chi^A = \frac{1}{\sqrt{2}} \left(\chi(1,2) - \chi(2,1)\right) = 0$$
$$\chi^S \neq 0$$

Thus the fermion wavefunction is only affected by the contribution of χ^S, so

$$\Psi^A(1,2) = \psi^A \chi^S = \frac{1}{\sqrt{2}} \left(\psi(r_1, r_2) - \psi(r_2, r_1)\right) \chi^S$$

Thus, if the fermions are in the same spin state, then the total wave vanishes if $r_1 = r_2$. **Different fermions must occupy different positions in space.** Bosons aren't bound to this rule. So if our world was mostly bosons, things would be much smaller.

24 Week 24 (Mar 2 – Mar 6)

24.1 Interpretations of Quantum Mechanics

24.1.1 Questions to consider

1. Do physical objects have well-defined properties prior to and independent of measurement?
2. Is there an aspect of reality described by the wavefunction? Or is it just a tool for calculating probabilities?
3. Does there even exist a world out there that we're trying to understand?
4. Is quantum mechanics a complete theory, or we do need to add more to fully describe the universe?
5. Does the observer (through choice of measurement) actually change the state of the world out there (classically or quantumly)?

24.1.2 Some options

1. **Copenhagen:** "Hardline" quantum mechanics. Particles don't have properties prior to measurement. Alternatively, small things are quantum, large things are classical (but where's the divide?)

2. **De Broglie-Bohm:** Both real particles & wavefunction exist – the "guiding wave" guides the particle to the right answer.
3. **Many Worlds:** Everything is unitary, thus no collapse of the wavefunction occurs. Instead, every time a measurement occurs, the outcomes branch into a multiverse of all possible outcomes.
4. **Objective Collapse:** Collapse of wavefunction happens as result of measurement, or at macroscopic levels.
   - **GRW (Ghirardi–Rimini–Weber):** Make the Schrodinger equation slightly non-linear, which allows for collapse to happen.
   - **Penrose's 1-Graviton criterion:** When spacetime differs by one graviton, collapse happens.
5. **Quantum Bayesianism (QBism):** Theory is simply means to calculate probabilities of outcomes. It doesn't describe what actually happens in the world.
6. **Superdeterminism:** All events are predetermined by hidden variables (deterministic world, no probability). This works by a loophole in Bell's theorem: if the observer & observed system are correlated, entanglement can be explained by hidden variables.
7. **Relational Quantum Mechanics:** State of quantum system is relational, different for each observer. Could be in superposition to one observer, but collapsed for another.
8. **Statistical Ensemble Representation:** Can only talk about statistical ensembles, not one particle. (But can't we do experiments with just one particle? Also challenged by GHZ experiment, which only requires 1 experiment to decide between local realism & quantum mechanics.)
9. **Transactional Interpretation:** Involves retrocausality. Wavefunction can go backwards in time. "Fixes" issues with Bell's inequality, entanglement, etc. But should we accept retrocausality?
10. **Pragmatic:** Scientific models describe the real world, but are *not* the real world themselves.
11. **Shut Up and Calculate:** Don't bother with this interpretations nonsense. Just use the theory as a good tool for modelling outcomes.

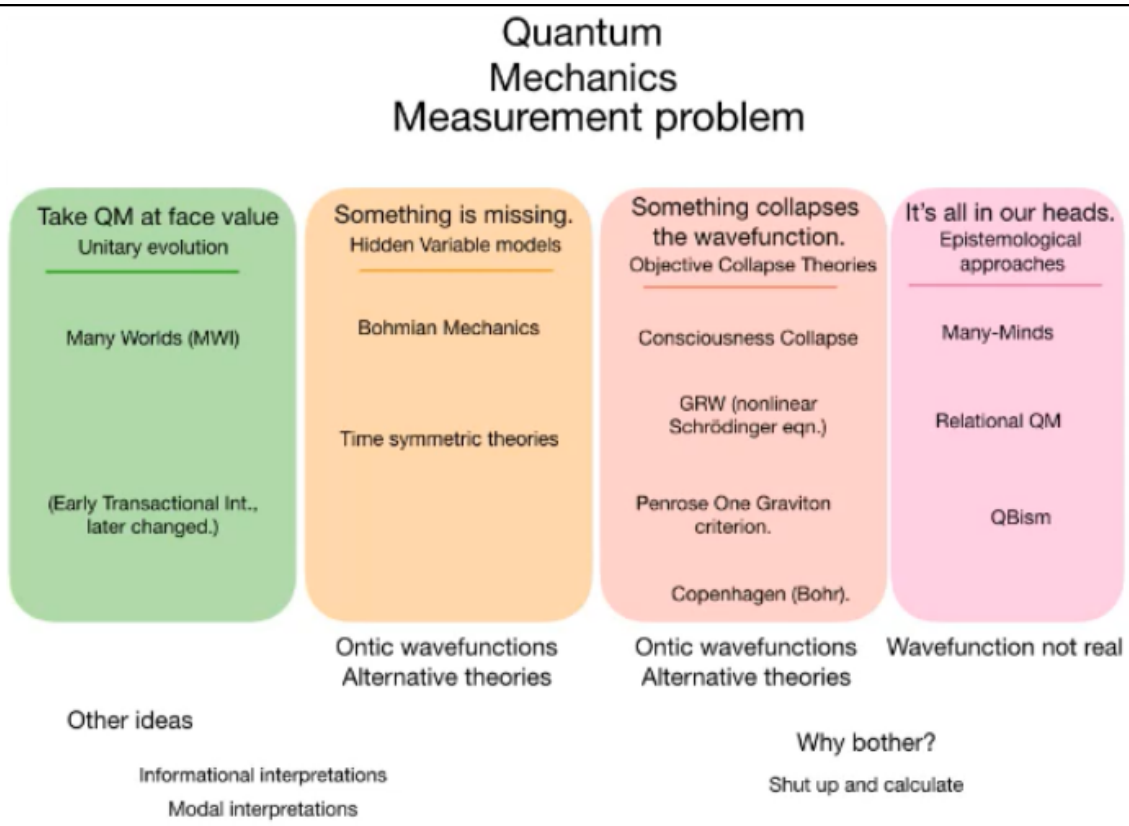

Interpretations of QM & the measurement problem

25 Week 25 (Mar 9 – Mar 13)

25.1 Quantum Error Correction

Classical error correction:

- Bit flips
- To "undo" errors, make copies of the original and perform a majority vote.
- E.g. Turn 100 into 111000000. If we get 101000001, we can assume that an error has occurred on the 1st and 3rd qubits. This works if the chance of error is $< 50\%$.
- The 100 is called the **logical qubits**. The 111000000 is called the **physical qubits**.

Quantum error correction:

- Bit flips can still occur.
- But phase errors are also a problem.

There are some difficulties in adapting classical error correction for quantum systems:

- **No cloning:** can't copy an unknown state.
- **Measurement:** can't measure qubit (this destroys phase information).

- **Continuous errors:** phases are continuous, larger space for errors to occur.

25.2 Simple 3-Qubit Code

25.2.1 Bit Flips

First, assume a $< 50\%$ chance for errors to occur. Then we only need to consider cases with 0 or 1 errors. Say the input is $|\psi\rangle = a|0\rangle + b|1\rangle$. We can't copy this state into, say, $|\psi\rangle \otimes |\psi\rangle \otimes |\psi\rangle$. But what we **can** do is create a state like

$$a|000\rangle + b|111\rangle$$

which turns out to satisfy our purposes. Now there are 4 cases for errors:

$$\begin{aligned}
|\Psi\rangle &= a|000\rangle + b|111\rangle \\
|\Psi_2\rangle &= a|100\rangle + b|011\rangle \\
|\Psi_1\rangle &= a|010\rangle + b|101\rangle \\
|\Psi_0\rangle &= a|001\rangle + b|110\rangle
\end{aligned}$$

We'll use 2 ancilla qubits to cover all $2^2 = 4$ cases. A simple way to correct is the following circuit:

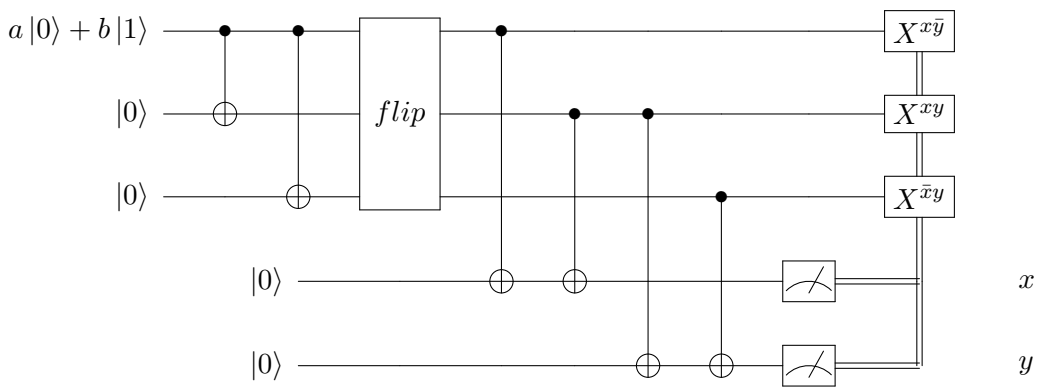

We perform parity checks to find where the error is, a procedure called **syndrome identification**. The results of measuring the ancilla qubits tell us how to undo the error.

$$\begin{aligned}
&00 : \text{don't do anything} \\
&01 : \text{flip top qubit} \\
&10 : \text{flip bottom qubit} \\
&11 : \text{flip middle qubit}
\end{aligned}$$

We could also reduce the number of measurements by replacing with CNOTs:

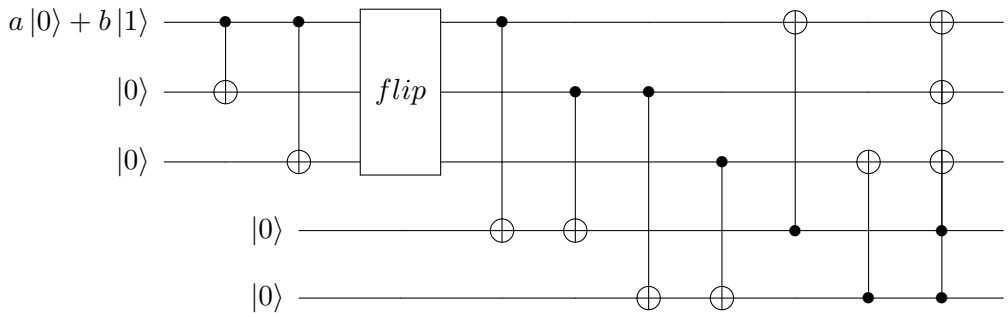

Yet another approach is to use the identity that a CNOT is equivalent to a controlled Z with Hadamards around the control:

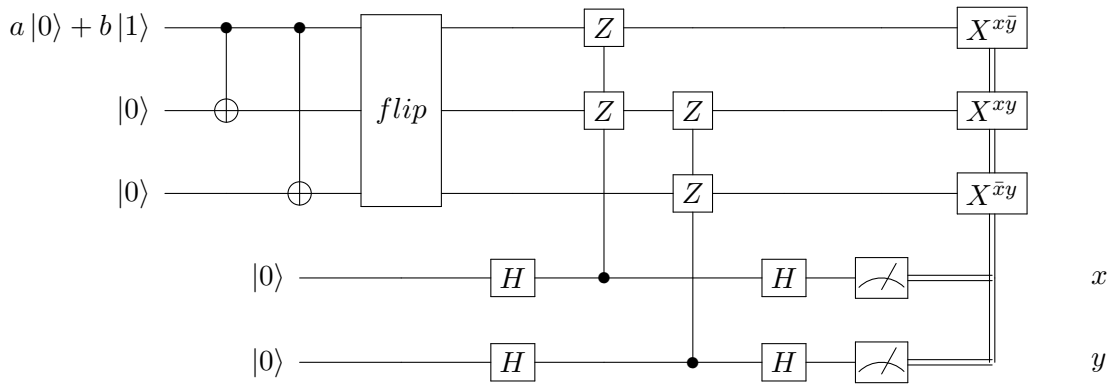

There are two "measurements" here: $A_0 = Z_0 Z_1$ and $A_1 = Z_1 Z_2$. This shouldn't affect the upper register $\mathcal{E}|\tilde{\psi}\rangle = \mathcal{E}(a|000\rangle + b|111\rangle)$. So our requirements are

- **Hermitian & Unitary:** $A_i\left(\mathcal{E}|\tilde{\psi}\rangle\right) = \mathcal{E}|\tilde{\psi}\rangle$
- **Eigenvalues 1 and -1:** $A_i^2 = 1$
- **Commute:** $[A_i, A_j] = 0$ for all i, j. Note that $[Z_a, Z_b] = 0$ trivially if $a \neq b$.

Then the "measurement outcomes" (A_0, A_1) determine which error has occurred. We either get $(0,0)$, $(0,1)$, $(1,0)$, or $(1,1)$.

25.2.2 Phase Flips

Phase flips must also be dealt with in error correction. A neat trick is to leverage a change of basis. In the Hadamard basis,

$$|+\rangle = (|0\rangle + |1\rangle)/\sqrt{2}$$
$$|+\rangle = (|0\rangle - |1\rangle)/\sqrt{2}$$

So a phase flip of π (applicaiton of Z) just becomes a bit flip. Then we can use our previous bit-flip correction procedure, after changing to the Hadamard basis first.

For example, consider a bit flip on 1 qubit, and its correction:

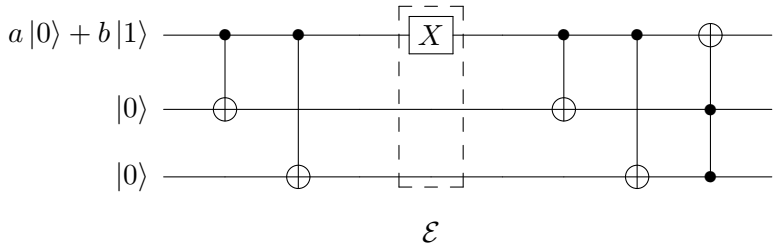

A phase flip is just this plus some Hadamards to put the error in the Hadamard basis:

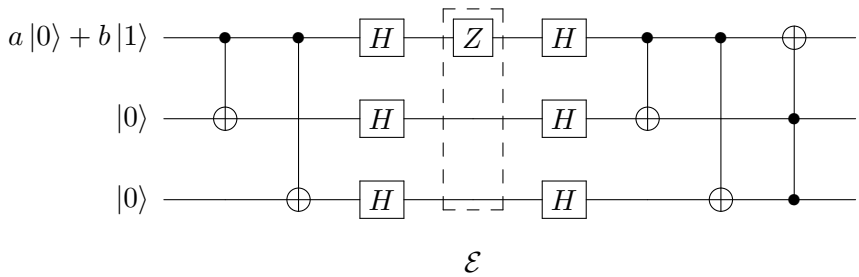

25.2.3 Other Errors

In QEC, bit flips are modeled by X, and phase flips by Z. A Y gate is just a combination of X and Z, so we just have to consider errors being either X or Z. But since phases are continuous, what about S, T, etc.? It turns out that those don't matter. **All** phase errors can be described as a random application of Z.

By linearity, a superposition of errors is just

$$|e\rangle\,|\tilde{\psi}\rangle = \left(|e\rangle\,\mathbf{1} + \sum_{i=0}^{n-1} |a_i\rangle\,X_i + |b_i\rangle\,Y_i + |c_i\rangle\,Z_i\right)|\tilde{\psi}\rangle$$

The Y error is just iXZ, so that's fine. Measuring the ancilla $|e\rangle$ involving the **syndrome operators** will collapse the system into either an X or Z error (or none).

For example:

- Hadamard errors: $H = (X+Z)/\sqrt{2}$, so this is a superposition of an X error and Z error.
- $X^{1/n}$ errors: These can be written as a superposition of no error or an X error. For example, for $X^{1/2}$,
$$X^{1/2} = \begin{pmatrix} 1+i & 1-i \\ 1-i & 1+i \end{pmatrix} = \frac{1+i}{2}1 + \frac{1-i}{2}X$$
- Phase errors: Any phase gate $P(\phi)$ can be written as a superposition of no error or a Z error:
$$P(\phi) = \begin{pmatrix} 1 & 0 \\ 0 & e^{i\phi} \end{pmatrix} = \frac{1}{2}(1+e^{i\phi})\mathbf{1} + \frac{1}{2}(1-e^{i\phi})Z$$

By measuring the ancillas, we collapse the error into either no error, an X error, or a Z error. Then the usual bit flips / phase flips can be applied.

25.3 Shor's 9-Qubit Code

Shor's 9-qubit code is one that combines both the bit flip and phase flip methods defined here. It's not widely used in that it's less efficient that other codes, but it's still a good example of error correction. This was the code that set up the quantum hype, since it showed that errors (formerly a big barrier in quantum computing) could be corrected.

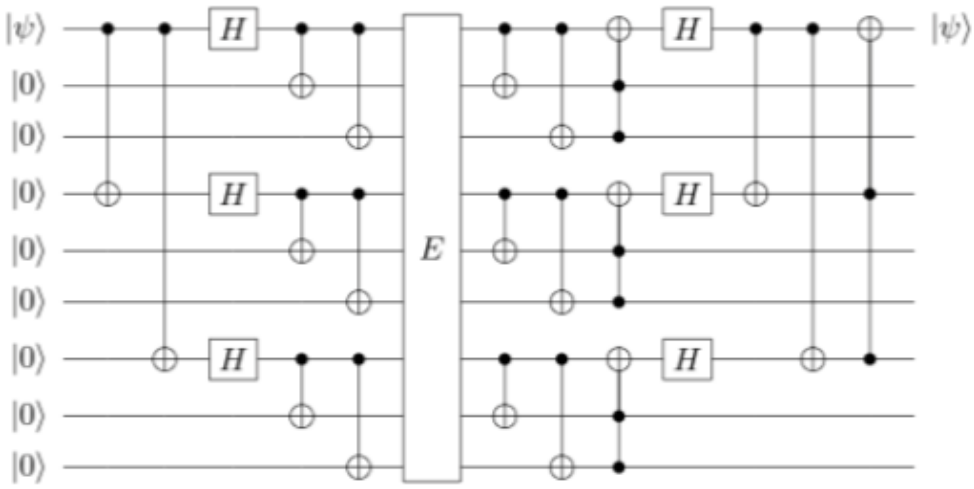

Shor's 9-qubit code

26 Week 26 (Mar 16 – Mar 20)

26.1 Steane Code

26.1.1 Setup

This is a 7-qubit quantum error correction (QEC) code. For $|\tilde{\psi}\rangle = \alpha\,|000000\rangle + \beta\,|111111\rangle$, the environment's interaction is

$$|e\rangle\,|\tilde{\psi}\rangle \to \left(|d\rangle\, I + \sum_{i=0}^{n-1} |a_i\rangle\, X_i + |b_i\rangle\, Y_i + |c_i\rangle\, Z_i\right)|\tilde{\psi}\rangle$$

There are 21 possible outcomes (for each X, Y, Z). Our **syndrome operators** need to be such that

$$M_i^2 = 1\ ,\quad M_i^\dagger = M_i\ ,\quad [M_i, M_j] = 0\ ,\quad M_i\,|\tilde{\psi}\rangle = |\tilde{\psi}\rangle$$

The ± 1 eigenvalues will uniquely identify the error syndrome. Since there are two choices, we can recognize up to 2^n errors. with n qubits. For $n = 7$, $2^7 > 21$, so we're good. The explicit operators are

$$\begin{aligned} M_0 &= X_0X_4X_5X_6 & N_0 &= Z_0Z_4Z_5Z_6 \\ M_1 &= X_1X_3X_5X_6 & N_1 &= Z_1Z_3Z_5Z_6 \\ M_2 &= X_2X_3X_4X_6 & N_2 &= Z_2Z_3Z_4Z_6 \end{aligned}$$

For the state $|\tilde{\psi}\rangle = \alpha\,|0000000\rangle + \beta\,|1111111\rangle$, we encode the logical qubits $|\tilde{0}\rangle$ and $|\tilde{1}\rangle$ as

$$|\tilde{0}\rangle = \frac{1}{2\sqrt{2}}(1+M_0)(1+M_1)(1+M_2)\,|0000000\rangle$$
$$|\tilde{1}\rangle = \frac{1}{2\sqrt{2}}(1+M_0)(1+M_1)(1+M_2)\,|1111111\rangle$$

We can verify that these satisfy our requirements. $M_i^2 = N_i^2 = I$, and $M_i(1+M_i) = 1 + M_i$, so

$$M_i\,|\tilde{\psi}\rangle = |\tilde{\psi}\rangle$$

The relevant part of the circuit is (with ancillas on top):

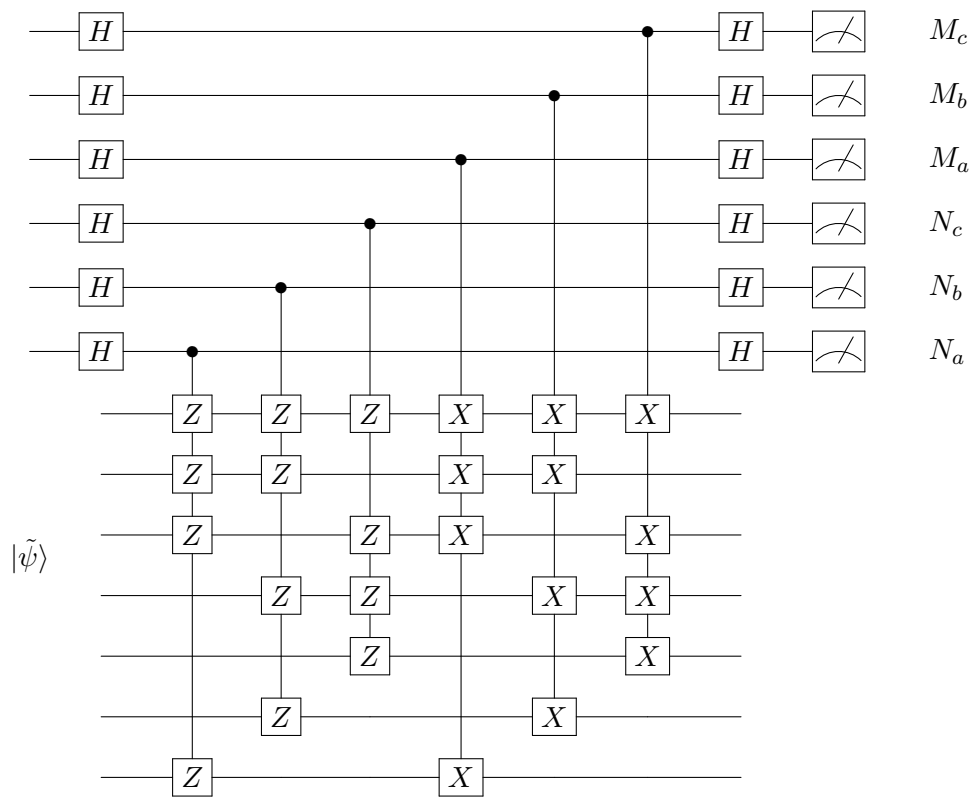

26.1.2 Syndrome Detection

Imagine passing the error from left to right, through the gates on its rail. Here, it's a Z error.

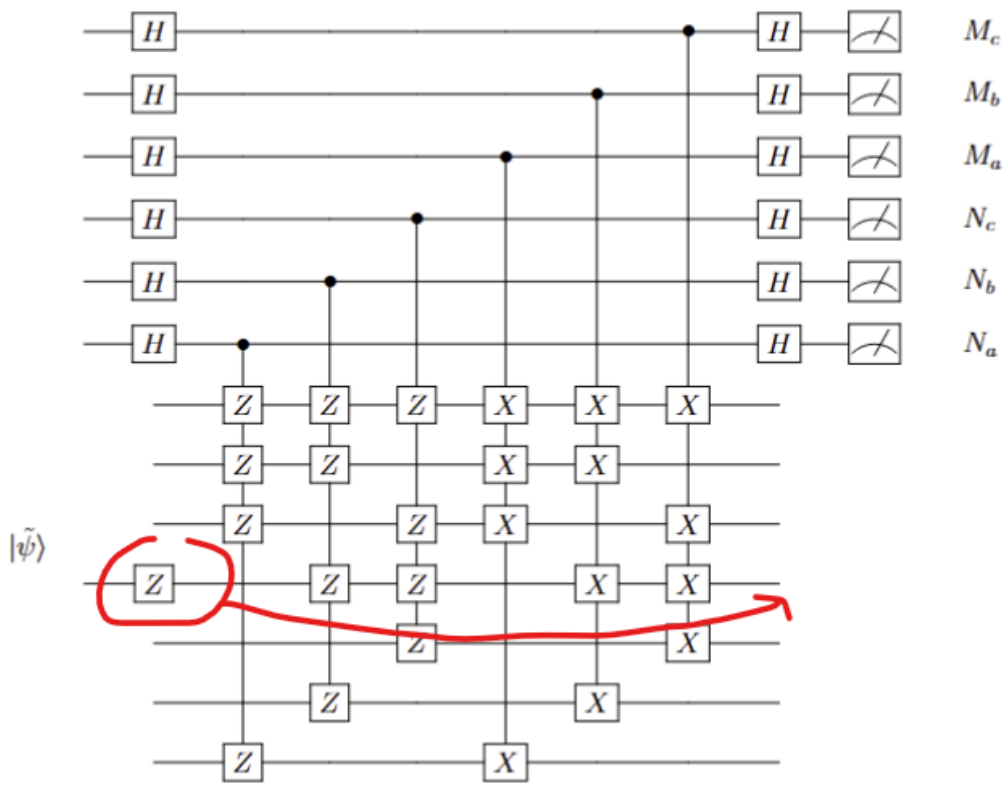

Passing an error left to right

The N_i are unchanged since nothing happens when passing a Z through another Z gate. But since the Pauli gates anticommute, $X_iZ_i = -Z_iX_i$, and the measurement of each M_i is 1.

In this case, we get

$$\begin{array}{ccc} N_a = 0 & N_b = 0 & N_c = 0 \\ M_a = 0 & M_b = 1 & M_c = 1 \end{array}$$

We correct errors accordingly for each of the 2^6 measurement outputs.

27 Week 27 (Mar 30 – Apr 3)

27.1 5-Qubit Code

Recall the general representation of an error:

$$|e\rangle\,|\tilde{\psi}\rangle = \left(|d\rangle\, I + \sum_{i=0}^{n-1} |a_i\rangle\, X_i + |b_i\rangle\, Y_i + |c_i\rangle\, Z_i\right) |\tilde{\psi}\rangle$$

For an n-qubit code, we have $3n+1$ possible errors ($3n$ for 3 gates and 1 error-free state). Each error has a two-dimensional subspace spanned by $|0\rangle$ and $|1\rangle$, so we need a $2(1+3n)$ dimensional Hilbert space on which to project the error.

For n qubits, Hilbert space is 2^n dimensional. Thus, to correct errors, we require

$$2(1+3n) \leq 2^n$$

The smallest n for which this works is $n=5$. This is called the "perfect code." But it's usually less applicable than the 7-qubit Steane code and others.

The syndrome operators for the 5-qubit code are

$$\begin{aligned} M_a &= Z_1 X_2 X_3 Z_4 \\ M_b &= Z_2 X_3 X_4 Z_0 \\ M_c &= Z_3 X_4 X_0 Z_1 \\ M_d &= Z_4 X_0 X_1 Z_2 \end{aligned}$$

The logical qubits are

$$\begin{aligned} |\tilde{0}\rangle &= \frac{1}{4}(1+M_a)(1+M_b)(1+M_c)(1+M_d)\,|00000\rangle \\ |\tilde{1}\rangle &= \frac{1}{4}(1+M_a)(1+M_b)(1+M_c)(1+M_d)\,|11111\rangle \end{aligned}$$

27.2 Transverse Gates

Return to the Steane Code. The syndrome operators are

$$\begin{aligned} M_0 &= X_0 X_4 X_5 X_6 & N_0 &= Z_0 Z_4 Z_5 Z_6 \\ M_1 &= X_1 X_3 X_5 X_6 & N_1 &= Z_1 Z_3 Z_5 Z_6 \\ M_2 &= X_2 X_3 X_4 X_6 & N_2 &= Z_2 Z_3 Z_4 Z_6 \end{aligned}$$

The logical qubits were

$$\begin{aligned} |\tilde{0}\rangle &= \frac{1}{2\sqrt{2}}(1+M_0)(1+M_1)(1+M_2)\,|0000000\rangle \\ |\tilde{1}\rangle &= \frac{1}{2\sqrt{2}}(1+M_0)(1+M_1)(1+M_2)\,|1111111\rangle \end{aligned}$$

We seek to define gates that act on the *logical qubits*, not the physical ones. It can be shown that $\tilde{X} = XXXXXXX$ is the logical X gate: $\tilde{X}\,|\tilde{0}\rangle = |\tilde{1}\rangle$ and vice versa. Gates like these, which are formed by applying the same gate on each rail, are called **transversal gates**.

This turns out to be the same for Z. The logical Z gate is $\tilde{Z} = ZZZZZZZ$.

27.3 Non-Transversal Gates

For the 7-qubit code, S is not transversal. We expect $S\,|\bar{1}\rangle = i\,|\bar{1}\rangle$, but $S\,|\bar{1}\rangle = -i\,|\bar{1}\rangle$. However, this is a simple fix by adding the transverse Z gates:

$$\bar{S}_{FT} \equiv \bar{S} = \bar{Z}\bar{S} = |\bar{0}\rangle\langle\bar{0}| + i\,|\bar{1}\rangle\langle\bar{1}|$$
$$\bar{S}\,|\bar{0}\rangle = |\bar{0}\rangle \ , \ \ \bar{S}\,|\bar{1}\rangle = i\,|\bar{1}\rangle$$

The T gate is also not transversal. There's no simple way to implement the fault-tolerant version. Instead, use an ancilla (top rail) on a state with T applied (bottom rail). The single qubit case is below, and this must be done for all 7 qubits.

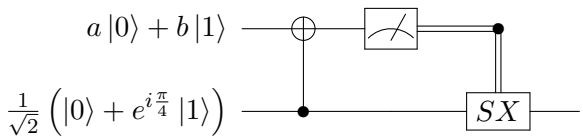

The measurement of an operator M with eigenvalues ± 1 also needs ancillas. The single qubit case is below, and this must be done for all 7 qubits.

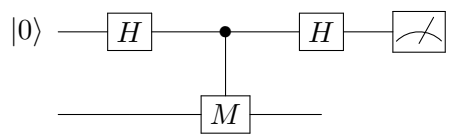

Note that if we're expanding to multiple qubits, M must be replaced with its transversable variant. Consider the 3-qubit case:

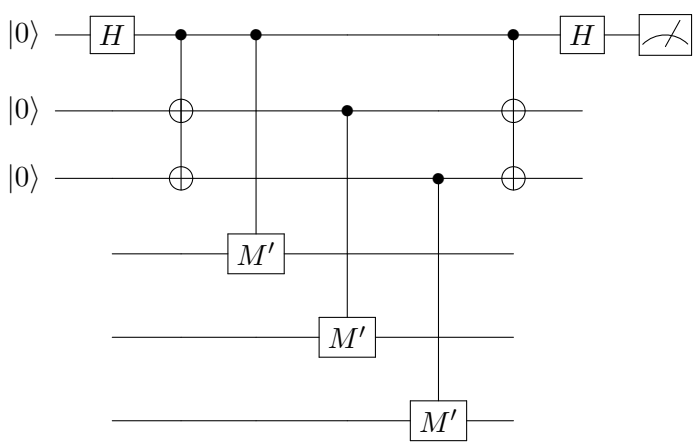

If M is already transversable, $M' = M$. Otherwise, adjustments are made. If $M = S$, then $M' = ZS$, for example.

27.4 Fault-Tolerant Computation

We seek to model the interaction of the environment. To start off, section each circuit into a **timestep** that only includes 1 gate acting on each rail. For example,

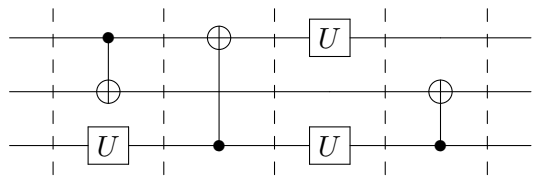

We model the interaction of the environment by adding random error gates ε. Assume all other gates are **perfect**: they work as expected, no random errors. The only errors are introduced by the ε gates.

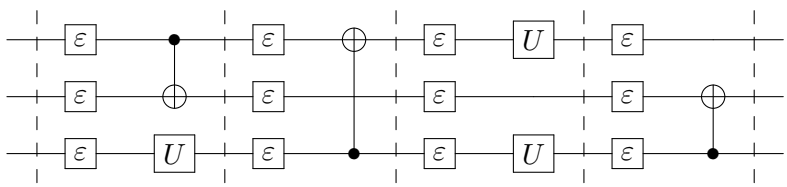

At each timestep, we need to apply error correction. This is daunting: even for just a small circuit, we need tons of qubits. It's why some people are skeptical of quantum computing. However, there *are* theorems that show that the number of qubits don't grow exponentially.

28 Week 28 (Apr 6 – Apr 10)

28.1 Basics of Information Theory

Starts with Claude Shannon, 1946 Bell Labs.

Information is like the "surprise you get when you make a measurement" (Dr. Oas).

- More surprise $\rightarrow$ more information
- System has just 1 outcome (certainty) $\rightarrow$ no information gained

We gain maximum information when we go from complete ignorance $\rightarrow$ total information about the state.

- For a system with n outcomes, this is equivalent to each outcome having probability $1/n$.

Importantly, the actual labels/outcomes of the measured system is irrelevant w.r.t information. E.g. rolling a 2 on a 6-sided dice gives the same amount of information as rolling a 5.

Properties of information:

1. Function of only the probabilities, not the value of outcomes: $I(p_i)$
2. Continuous measure, since probabilities are continuous.
3. Non-negative.
4. Additive: for independent systems, $I(p_{ab}) = I(p_a) + I(p_b)$.

- Note that the probability for independent systems is the product, so

$$I(p_{ab}) = I(p_a p_b) = I(p_a) + I(p_b)$$

This screams a log. Since probabilities are ≤ 1, define information as

$$\boxed{I(p_i) = -\log p_i}$$

Usually we use base 2, for binary representations.

28.2 Shannon Entropy

Define **Shannon entropy** as the averaged sum of the total set of outcomes for event E.

$$\boxed{H(E) = \langle -\log p \rangle = -\sum_{i=1}^{n} p_i \log p_i}$$

- If E is certain, $p_0 = 1$, then $H(E) = -1\log(1) = 0$
- If E is completely unknown, $p_i = \frac{1}{n}\ \forall i$, then $H(E) = -n \cdot \frac{1}{n}\log\frac{1}{n} = \log n$

For joint events A, B, also define the joint Shannon entropy:

$$\boxed{H(A,B) = -\sum_{ij} p(a_i, b_j)\log p(a_i, b_j)}$$

These two definitions are useful, but others exist:

1. Relative entropy:

$$H\left(p(x)\|q(x)\right) = \sum_x p(x)\log\frac{p(x)}{q(x)} = -H(X) - \sum_x p(x)\log q(x)$$

2. Conditional entropy:

$$H(X|Y) = H(X,Y) - H(Y)$$

3. Mutual information:

$$I(X:Y) = H(X:Y) = H(X) + H(Y) - H(X,Y)$$

28.2.1 Properties

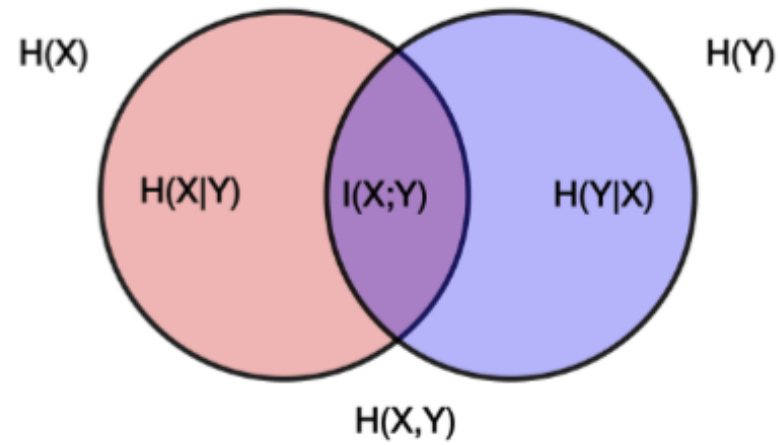

Different entropy types: Venn diagram

- Mutual information cannot be greater than any of its parts: $H(Y|X) \geq 0 \implies H(X:Y) \leq H(Y)$
- No part can have more information than the total: $H(X) \leq H(X,Y)$
- (Subadditivity) Total information cannot be more than the sum of its parts: $H(X,Y) \leq H(X) + H(Y)$
- Conditioning reduces entropy: $H(X|Y,Z) \leq H(X|Y)$

These follow intuitively from the diagram. Keep the "No part can have more information than the total" in mind, it breaks down in quantum systems.

28.2.2 Shannon's Theorem

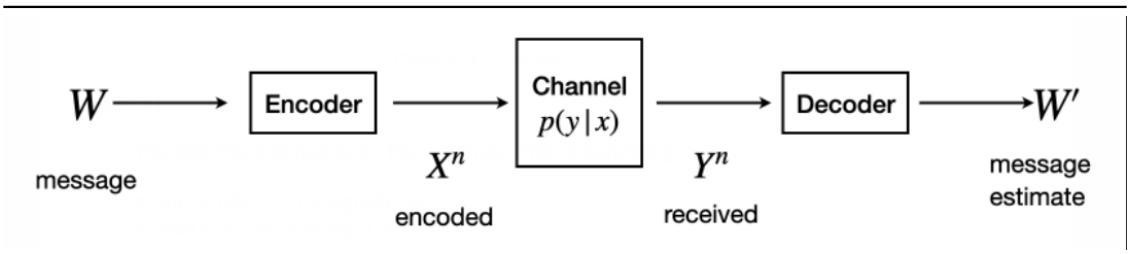

Communication channel

Say Alice is sending information to Bob through a communication channel. The bitstring can be treated as a random variable X.

- Noiseless channel: Bob gets same distribution X.
- Noisy channel: Bob gets different distribution Y.

The **channel capacity** measures how correlated X and Y are: the number of bits of X that Bob can expect to learn.

Shannon's Theorem: If R is the rate of information production, then if $R < C = I(X : Y)$, the information can be transmitted with arbitrary reliability.

29 Week 29 (Apr 13 – Apr 17)

29.1 Von Neumann Entropy

This is similar to Shannon entropy, but for quantum systems. Thus, it's a function of the density operator ρ (to make it a function of probability).

$$\boxed{S(\rho) = -\text{Tr}(\rho \log \rho) = -\sum_i \lambda_i \log \lambda_i}$$

Above is possible because the density operator is Hermitian, so we can diagonalize it.

$$\rho = \sum_i p_i \left|\psi_i\right\rangle \left\langle\psi_i\right|$$

The von Neumann entropy is a measure of the information gained by measuring the quantum state. I.e. the measure of the **uncertainty of a quantum state**.

For pure states in d-dimensional Hilbert space, $\rho = \left|\psi\right\rangle \left\langle\psi\right|$ and one of $\lambda_i = 1$. Thus

$$S(\rho) = -\sum_i \lambda_i \log \lambda_i = -\log 1 = 0$$

For maximally mixed states in d-dimensional Hilbert space, $\rho = \left|\psi\right\rangle \left\langle\psi\right|$ has $1/d$ in all diagonals. Thus

$$S(\rho) = -\sum_i \lambda_i \log \lambda_i = -(0 - \log d) = \log d$$

29.1.1 Properties

Let $A = \rho^A$ and $B = \rho^B$.

- Invariant under unitary transformations: $S(U\rho U^\dagger) = S(\rho)$
- Mixtures: if $\rho = p_1\rho_1 + p_2\rho_2$, then

$$S(\rho) \geq p_1 S(\rho_1) + p_2 S(\rho_2)$$

- Uncorrelated systems: $S(\rho_A \otimes \rho_B) = S(\rho_A) + S(\rho_B)$
- Relation to Shannon entropy: $H(A) \geq S(\rho)$, equal if states $\left|\psi_i\right\rangle$ are mutually orthogonal
- Subadditive: $S(A, B) \leq S(A) + S(B)$

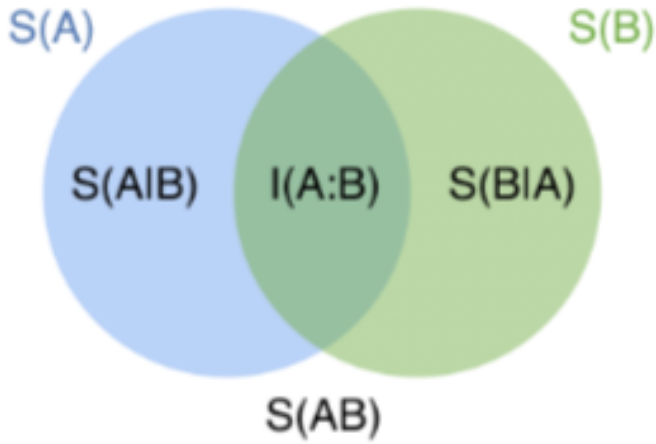

von Neumann entropy venn diagram

- Joint entropy: $S(A,B) = S(\rho_{AB}) = -\text{tr}(\rho_{AB} \log \rho_{AB})$
- Mutual information: $S(A:B) = S(A) + S(B) - S(A,B)$
- Conditional entropy: $S(B|A) = S(A,B) - S(A)$

29.1.2 Examples

Example: Unentangled mixed state $\rho^A \otimes \rho^B$. Note that

$$S(A) = -\text{tr}(\rho^A \log \rho^A)\ ,\quad S(B) = -\text{tr}(\rho^B \log \rho^B)$$
$$S(A,B) = S(A) + S(B)$$
$$I(A:B) = 0$$

This is intuitive from the Venn diagram.

Example: Maximally entangled state $\rho_{AB} = |\phi_+\rangle\langle\phi_+|$. This is diagonal in the Bell basis:

$$\rho^{AB} = \left(\frac{|00\rangle + |11\rangle}{\sqrt{2}}\right)\left(\frac{\langle 00| + \langle 11|}{\sqrt{2}}\right) \longrightarrow \rho^{AB}_{\phi_\pm,\psi_\pm} = \begin{pmatrix} 1 & 0 & 0 & 0 \\ 0 & 0 & 0 & 0 \\ 0 & 0 & 0 & 0 \\ 0 & 0 & 0 & 0 \end{pmatrix}$$
$$S(A,B) = 0$$

So no information gained. But if we trace over a subsystem, say B, then

$$\rho^A = \text{tr}_B \rho^{AB} = \langle 0|_B \rho^{AB} |0\rangle_B + \langle 1|_B \rho^{AB} |1\rangle_B$$
$$= \frac{1}{2}\begin{pmatrix} 1 & 0 \\ 0 & 1 \end{pmatrix}$$
$$S(A) = \log 2$$

The information gained from the total is 0, but the information gained from a subpart is nonzero.

Example: Entangled mixed state $|\Phi_+\rangle = \frac{1}{\sqrt{2}}(|00\rangle + |11\rangle)$. The overall state is pure, but subparts (found by tracing out) are mixed.

$$S(A,B) = 0\ ,\quad S(A) = S(B) = 1$$
$$I(X:Y) = S(A) + S(B) - S(X,Y) = 2$$

Thus the other parts of the Venn diagram are

$$S(X|Y) = S(Y|X) = -1$$

This is odd. Entanglement gives us more than the classical maximum information, and also a negative information.

30 Week 30 (Apr 20 – Apr 24)

30.1 Comparison: Shannon Entropy vs. Von Neumann Entropy

Shannon entropy

- Classical phase space Ω
- Uncertainty in classical state described by probability distribution $p(x_1, x_2, \ldots, x_n)$
- Shannon entropy is measure of uncertainty of classical state.
- Specifically, the normalized weighted sum over classical states

$$H(X) = -\sum_i p_i \log p_i$$

Von Neumann entropy

- Hilbert space $\mathcal{H}$
- Uncertainty in quantum state described by density matrix ρ
- Von Neumann entropy is measure of uncertainty of quantum state
- Specifically, the normalized weighted sum over quantum pure states

$$S(\rho) = -\mathrm{Tr}(\rho \log \rho)$$

Common cases and their Venn diagrams:

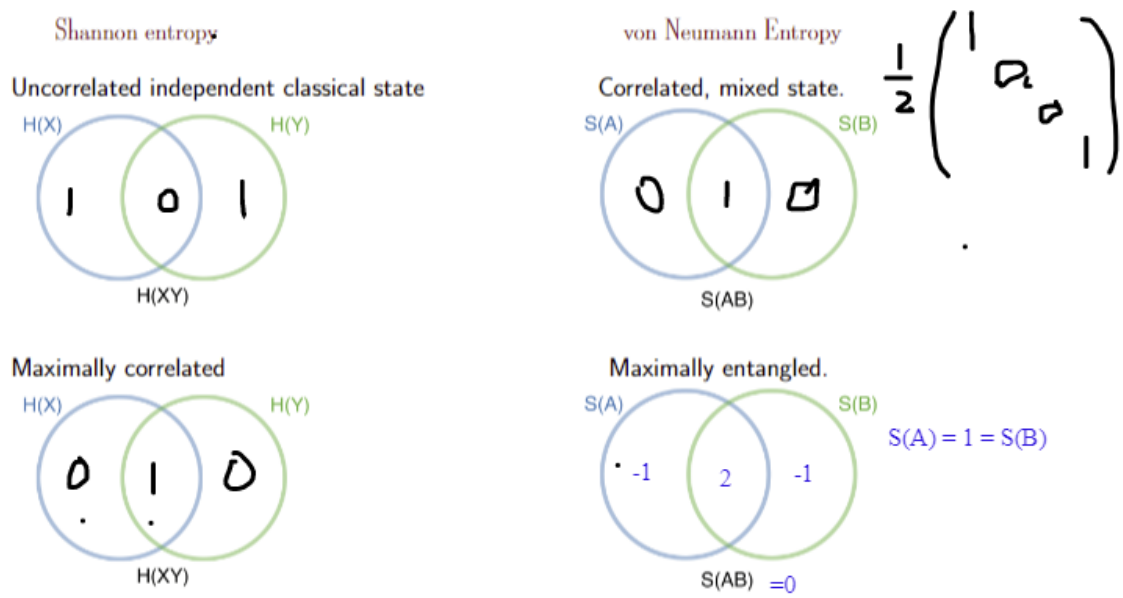

Common cases

30.2 Information Theory Representation of Measurement

Let Q be the quantum system measured by a macroscopic apparatus $A = \{A_1, A_2, \ldots, A_{10^{23}}\}$. The quantum system and apparatus become entangled:

$$\frac{1}{\sqrt{2}}\left(|0\rangle_Q + |1\rangle_Q\right)|\text{ready}\rangle_A \Longrightarrow \frac{1}{\sqrt{2}}\left(|0\rangle_Q|0\rangle_A + |1\rangle_Q|1\rangle_A\right)$$

If A is two parts,

$$\frac{1}{\sqrt{2}}\left(|0\rangle_Q + |1\rangle_Q\right)|\text{ready}\rangle_{A_1}|\text{ready}\rangle_{A_2} \Longrightarrow \frac{1}{\sqrt{2}}\left(|0\rangle_Q|0\rangle_{A_1}|0\rangle_{A_2} + |1\rangle_Q|1\rangle_{A_1}|1\rangle_{A_2}\right)$$

This is a GHZ state, a pure state. So $S(Q, A_1, A_2) = 0$.

Tracing out one gives us a correlated mixed state:

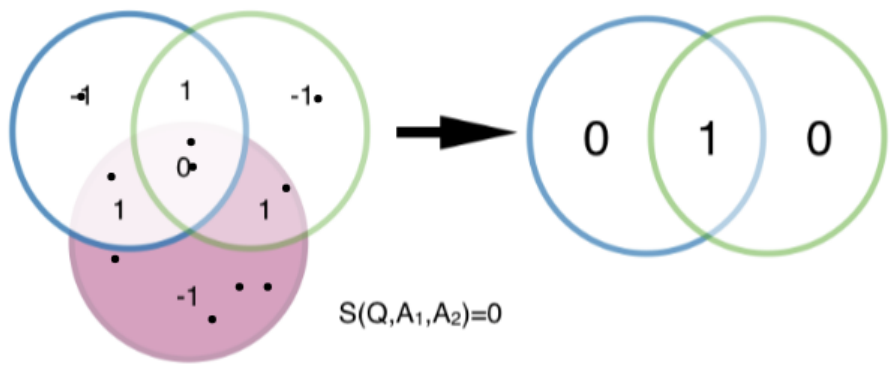

Tracing out 1 qubit

The total entropy of the system is still 0. But by "ignoring"/"tracing out" a part (maybe the environment), we gain information from the measurement.

The total Venn diagram turns out to be

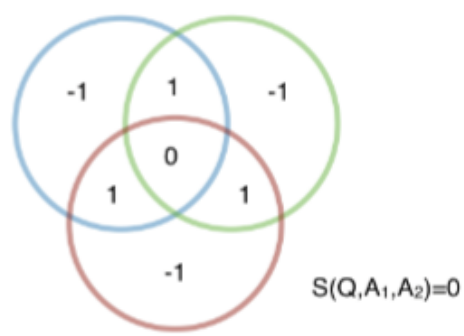

Complete GHZ Venn Diagram

The total entropy $S(Q, A_1, A_2)$ is zero. If the apparatus and Q are completely isolated, no information is attainable (note the 0 in the center).

We can keep adding more systems, e.g. the environment as a fourth circle to the Venn diagram. But pure circles won't work anymore, so the diagram gets wonky.

31 Week 31 (Apr 27 – May 1)

31.1 GHZ-5 Entropy Diagram

(Not exactly a Venn diagram)

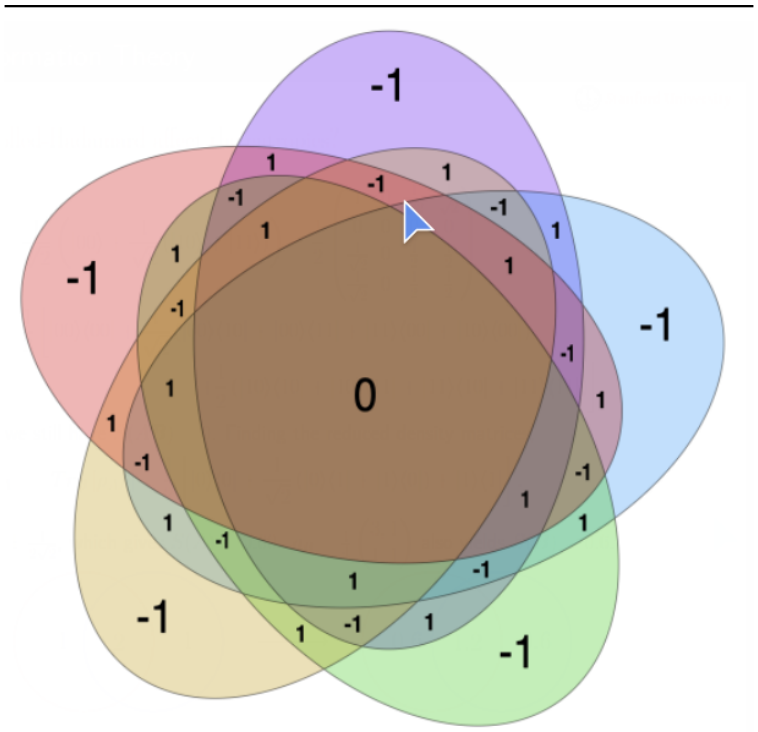

GHZ-5 Von Neumann entropy

Tracing out one region will give the correlated mixed state with all 0s and a 1 in the center. Another way to see that we lose quantum information.