Details Matter: Quantum Advantage in the Extended Three-Choice Prisoner's Dilemma

Gene Yang

April 26, 2026

Abstract

Prisoner's Dilemma is a common example in game theory with widespread applications in several fields. Eisert et al.'s 1999 paper extended Prisoner's Dilemma to quantum circuits, finding that a quantum player with access to the full set of unitary gates could consistently beat a classical player. In this paper, Eisert et al.'s circuit is extended to the Optional Prisoner's Dilemma, which has an extra choice: abstaining. A classical player that abstains can nullify the quantum player's advantage. However, if the payoffs are modified to slightly penalize abstaining, introducing an imbalance to the table, the quantum player's advantage returns. This toy model demonstrates that while entanglement can give quantum strategies an advantage over classical ones, the specifics depend on the structure of the game.

Contents

1 The 2×2 Prisoner's Dilemma **2**
1.1 Classical version . . . 2
1.2 Quantum version . . . 2
1.3 Quantum player's advantage . . . 3

2 The 3×3 Optional Prisoner's Dilemma **4**
2.1 Payoff table . . . 4
2.2 Circuit setup . . . 4
2.3 Payoff calculations . . . 5
2.4 Optimal quantum strategy . . . 5

3 Modified 3×3 Optional Prisoner's Dilemma **7**
3.1 Modified payoff table . . . 7
3.2 Payoff calculations . . . 8
3.3 Optimal quantum strategy . . . 9

4 Appendix A: Alice and Bob's Payoffs (OPD) **11**

5 Appendix B: Alice and Bob's Payoffs (Modified OPD) **13**

1 The 2×2 Prisoner's Dilemma

1.1 Classical version

The classical Prisoner's Dilemma is a commonly used example in game theory, demonstrating how lack of trust and information can lead to undesirable outcomes. It assumes two players: Alice and Bob. Both players are rational and have no knowledge of the other's choice. Their only options are to cooperate with the other player, or to defect. Alice and Bob seek to maximize their individual payoffs, which we can model depending on their choices C (cooperate) or D (defect). This is given in Figure 1.

		Bob	
		C	D
Alice	C	(3, 3)	(0, 5)
	D	(5, 0)	(1, 1)

Figure 1: Payoff table for the classical Prisoner's Dilemma. The format is $(\$_A, \$_B)$, where $\$_A$ is Alice's payoff and $\$_B$ is Bob's payoff.

The ideal choice for both Alice and Bob is to cooperate, with a payoff of $(3, 3)$. However, cooperating has the risk of winning nothing if the other person defects. Thus the rational choice is to always defect, with a payoff of $(1, 1)$ [1]. Hence the dilemma – mutual cooperation results in the best payoff, but mutual defection is the most rational choice.

Due to its simple yet widely applicable structure, the classical Prisoner's Dilemma has many applications in economics, biology, psychology, and more [1].

1.2 Quantum version

In 1999, Eisert et al. extended the classical Prisoner's Dilemma using quantum computing. The difference is that the quantum game can leverage entanglement between Alice and Bob's choices, giving rise to more interesting results, as well as a potential resolution to the dilemma. The situation is modeled as a quantum circuit with 2 qubits, shown in Figure 2 [1]:

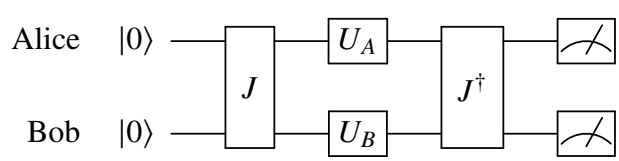

Figure 2: A 2-qubit circuit for the quantum Prisoner's Dilemma

Intuitively, the circuit acts like the "judge" that determines Alice and Bob's payoffs. Alice and Bob independently send their qubits through the circuit, where it is entangled and subject to their choice of gates. At the end, a reward is determined based on the measurement of the qubits.

Alice and Bob's qubits are initially set to $|0\rangle$. They are entangled with a unitary operator J. Next, Alice and Bob modify their qubits by applying a unitary operator U. Finally, the effect of the J gate is reversed with $J^\dagger$, and the qubits are measured to determine the payoffs. A final measurement of $|0\rangle$ is associated with "cooperate," while a measurement of $|1\rangle$ is associated with "defect" [1]. Thus, a player can choose to cooperate by setting $U = I$ or defect by setting $U = X$ (neglecting phases).

The general 2×2 unitary gate U is parametrized below, with $\theta \in [0, \pi/2]$ and $\alpha, \beta \in [-\pi, \pi]$. In this form, $U(0, 0, 0) = I$ is identified as "cooperate" and $U(\pi/2, 0, 0) = iX$ as "defect" [2].

$$U(\theta, \alpha, \beta) = \begin{bmatrix} e^{i\alpha}\cos\theta & ie^{i\beta}\sin\theta \\ ie^{-i\beta}\sin\theta & e^{-i\alpha}\cos\theta \end{bmatrix}$$

We also introduce an entangling gate J, the key difference between the quantum and classical versions of Prisoner's Dilemma [2]. By entangling Alice and Bob's qubits, we can access a wider range of strategies than possible classically.

$$J = \frac{1}{\sqrt{2}}\left(I^{\otimes 2} + iX^{\otimes 2}\right)$$

1.3 Quantum player's advantage

The final state of the circuit in Figure 2 is given by

$$|\psi_f\rangle = J^\dagger (U_A \otimes U_B) J\,|00\rangle$$

Using values from the table in Figure 1, Alice and Bob's expected payoffs take the form [1]

$$\begin{aligned}\langle \$_A \rangle &= 3\left|\langle 00|\psi_f\rangle\right|^2 + 0\left|\langle 01|\psi_f\rangle\right|^2 + 5\left|\langle 10|\psi_f\rangle\right|^2 + 1\left|\langle 11|\psi_f\rangle\right|^2 \\ \langle \$_B \rangle &= 3\left|\langle 00|\psi_f\rangle\right|^2 + 5\left|\langle 01|\psi_f\rangle\right|^2 + 0\left|\langle 10|\psi_f\rangle\right|^2 + 1\left|\langle 11|\psi_f\rangle\right|^2\end{aligned}$$

Here $|\langle 00|\psi_f\rangle|^2$, for example, is the probability that the final measurement of Alice and Bob's qubits will each be 0 ("cooperate"). Similarly, $|\langle 01|\psi_f\rangle|^2$ is the probability that the final measurement of Alice's qubit will be 0 ("cooperate") but Bob's qubit will be 1 ("defect").

If Alice is a classical player using $U_A(\theta_A, 0, 0)$ restricted to $\theta_A \in \{0, \pi/2\}$, while Bob has the full set of strategies $U_B(\theta_B, \alpha_B, \beta_B)$, Eisert et al. found that Bob has an advantage over Alice in all cases. Bob can play the "miracle move" M [1]

$$M = U(\pi/4, \pi/4, 0) = \frac{i}{\sqrt{2}}\begin{bmatrix} 1 & 1 \\ 1 & -1 \end{bmatrix}$$

which ensures that Bob's expected payoff is $3 + 2\sin(2\theta_A)$, while Alice's expected payoff is $1/2(1 - \sin(2\theta_A))$ [2]. Thus, if Alice is restricted to $\theta_A \in \{0, \pi/2\}$, her expected payoff is always 1/2, while Bob's expected payoff is always 3. Bob has achieved this imbalance by exploiting the wider range of unitary gates available to him, as well as the entangled nature of his and Alice's qubits.

2 The 3×3 Optional Prisoner's Dilemma

2.1 Payoff table

Eisert et al.'s quantum circuit for the Prisoner's Dilemma can be extended to a 3×3 Optional Prisoner's Dilemma. The Optional Prisoner's Dilemma is identical to the original 2×2 Prisoner's Dilemma, but with a third option: abstaining [3]. This version of Prisoner's Dilemma can model real-life situations where decisions may be avoided. The new payoff table with C ("cooperate"), D ("defect"), and A ("abstain") is shown below in Figure 3.

		Bob		
		C	D	A
Alice	C	(3, 3)	(0, 5)	(2, 2)
	D	(5, 0)	(1, 1)	(2, 2)
	A	(2, 2)	(2, 2)	(2, 2)

Figure 3: Payoff table for the Optional Prisoner's Dilemma. Similar to before, the format is $(\$_A, \$_B)$, where $\$_A$ is Alice's payoff and $\$_B$ is Bob's payoff.

The classically best strategy is to abstain, guaranteeing a payoff of 2 no matter what. This strategy avoids any unnecessary risks while avoiding serious losses compared to the other player. An interesting question is whether Bob, if given quantum strategies, still has an advantage.

2.2 Circuit setup

The circuit for the Optional Prisoner's Dilemma is similar to the classical 2×2 Prisoner's Dilemma. However, since there are 3 choices, each player must have 2 qubits to represent all their possible choices. This is shown in Figure 4. General quantum Prisoner's Dilemmas with N available choices can be modeled in a similar manner: with $\lceil \log_2 N \rceil$ qubits and independent unitary gates available to each player.

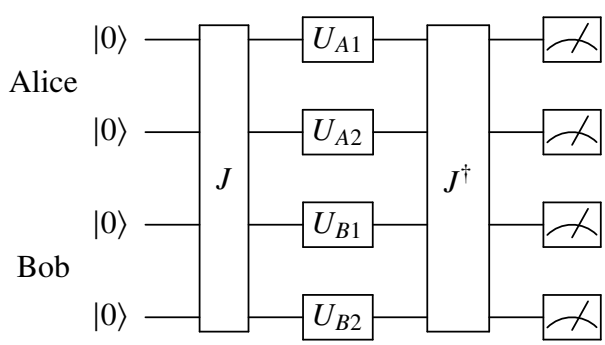

Figure 4: A 4-qubit circuit for the Optional Prisoner's Dilemma

Alice can manipulate her two qubits with U_{A1} and U_{A2}, while Bob can manipulate his two qubits with U_{B1} and U_{B2}. Previously, a measurement of $|0\rangle$ was associated with "cooperate" and $|1\rangle$ with "defect." Now we associate a measurement of $|00\rangle$ with "cooperate" and $|11\rangle$ with "defect." For symmetry, both $|01\rangle$ and $|10\rangle$ are associated with "abstain."

The entangling gate J is similar to before, but modified for 4 qubits [2]:

$$J = \frac{1}{\sqrt{2}}\left(I^{\otimes 4} + iX^{\otimes 4}\right)$$

2.3 Payoff calculations

The final state of the circuit in Figure 4 is

$$|\psi_f\rangle = J^\dagger (U_{A1} \otimes U_{A2} \otimes U_{B1} \otimes U_{B2}) J\,|0000\rangle$$

Alice and Bob's payoffs depend on the final measurement of $|\psi_f\rangle$:

$$\begin{aligned}
\langle \$_A \rangle = {} & 3\left|\langle 0000|\psi_f\rangle\right|^2 + 0\left|\langle 0011|\psi_f\rangle\right|^2 + 2\left|\langle 0010|\psi_f\rangle\right|^2 + 2\left|\langle 0001|\psi_f\rangle\right|^2 + \\
& 5\left|\langle 1100|\psi_f\rangle\right|^2 + 1\left|\langle 1111|\psi_f\rangle\right|^2 + 2\left|\langle 1110|\psi_f\rangle\right|^2 + 2\left|\langle 1101|\psi_f\rangle\right|^2 + \\
& 2\left|\langle 0100|\psi_f\rangle\right|^2 + 2\left|\langle 0111|\psi_f\rangle\right|^2 + 2\left|\langle 0110|\psi_f\rangle\right|^2 + 2\left|\langle 0101|\psi_f\rangle\right|^2 + \\
& 2\left|\langle 1000|\psi_f\rangle\right|^2 + 2\left|\langle 1011|\psi_f\rangle\right|^2 + 2\left|\langle 1010|\psi_f\rangle\right|^2 + 2\left|\langle 1001|\psi_f\rangle\right|^2
\end{aligned}$$

$$\begin{aligned}
\langle \$_B \rangle = {} & 3\left|\langle 0000|\psi_f\rangle\right|^2 + 5\left|\langle 0011|\psi_f\rangle\right|^2 + 2\left|\langle 0010|\psi_f\rangle\right|^2 + 2\left|\langle 0001|\psi_f\rangle\right|^2 + \\
& 0\left|\langle 1100|\psi_f\rangle\right|^2 + 1\left|\langle 1111|\psi_f\rangle\right|^2 + 2\left|\langle 1110|\psi_f\rangle\right|^2 + 2\left|\langle 1101|\psi_f\rangle\right|^2 + \\
& 2\left|\langle 0100|\psi_f\rangle\right|^2 + 2\left|\langle 0111|\psi_f\rangle\right|^2 + 2\left|\langle 0110|\psi_f\rangle\right|^2 + 2\left|\langle 0101|\psi_f\rangle\right|^2 + \\
& 2\left|\langle 1000|\psi_f\rangle\right|^2 + 2\left|\langle 1011|\psi_f\rangle\right|^2 + 2\left|\langle 1010|\psi_f\rangle\right|^2 + 2\left|\langle 1001|\psi_f\rangle\right|^2
\end{aligned}$$

The nature of the payoff is determined by the table in Figure 3. Not much has changed from the 2×2 Prisoner's Dilemma, other than the addition of another choice. However, there are much more terms that factor into the calculation of the payoff. In general, representing a Prisoner's Dilemma this way with N choices will result in 2^N terms that factor into the payoff – an exponential growth.

As before, Alice is the classical player, restricted to $U(\theta, 0, 0)$ with $\theta \in \{0, \pi/2\}$. Bob, the quantum player, has access to all $U(\theta, \alpha, \beta)$ with $\theta \in [0, \pi/2]$ and $\alpha, \beta \in [-\pi, \pi]$ [2]. We seek to determine whether Bob can still gain an advantage over Alice.

2.4 Optimal quantum strategy

Let $U_{A1} = U(\theta_1, 0, 0)$, $U_{A2} = U(\theta_2, 0, 0)$, $U_{B1} = U(\gamma_1, \alpha_1, \beta_1)$, and $U_{B2} = U(\gamma_2, \alpha_2, \beta_2)$. Carrying out the tensor products and simplifying exponentials for $|\psi_f\rangle$ gives the equations in Appendix A.

Using those equations, we can apply casework to Bob's payoff $\langle \$_B \rangle$ depending on each of Alice's choices. If Alice cooperates, she sets $(\theta_1, \theta_2) = (0, 0)$, so that $(U_{A1} \otimes U_{A2})\,|00\rangle = |00\rangle$. Similarly,

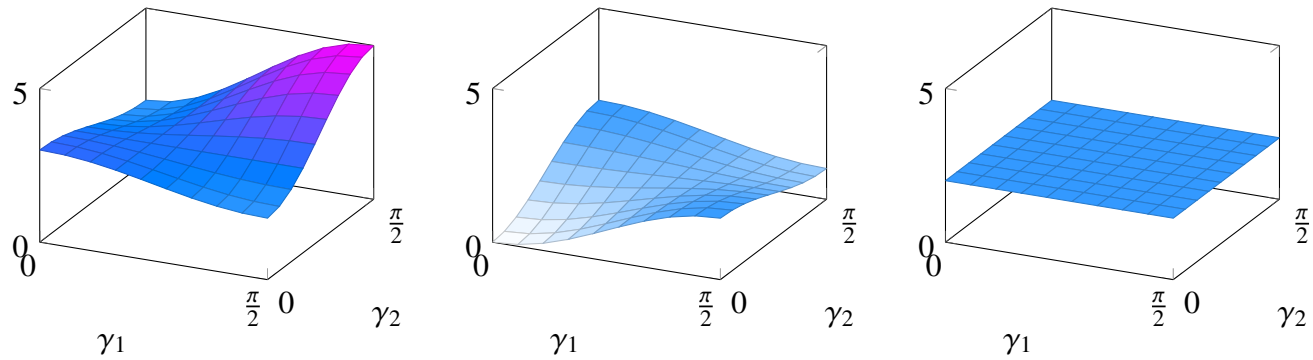

Figure 5: (From left to right) Bob's payoff as a function of his γ_1, γ_2 if Alice 1) cooperates, 2) defects, or 3) abstains. Here, Bob sets $\alpha_1 = \alpha_2 = 0$, $\beta_1 = \beta_2 = 0$.

if Alice defects, she sets $(\theta_1, \theta_2) = (\pi/2, \pi/2)$. If Alice abstains, she sets $(\theta_1, \theta_2) = (0, \pi/2)$ or $(\theta_1, \theta_2) = (\pi/2, 0)$. Bob's payoff depending on Alice's 3 choices are shown in Figure 5.

To minimize Bob's expected losses over all of Alice's strategies, we set $\alpha_1 = \alpha_2 = \pi/4$ and $\beta_1 = \beta_2 = 0$. Bob's payoff using this strategy is given in Figure 6.

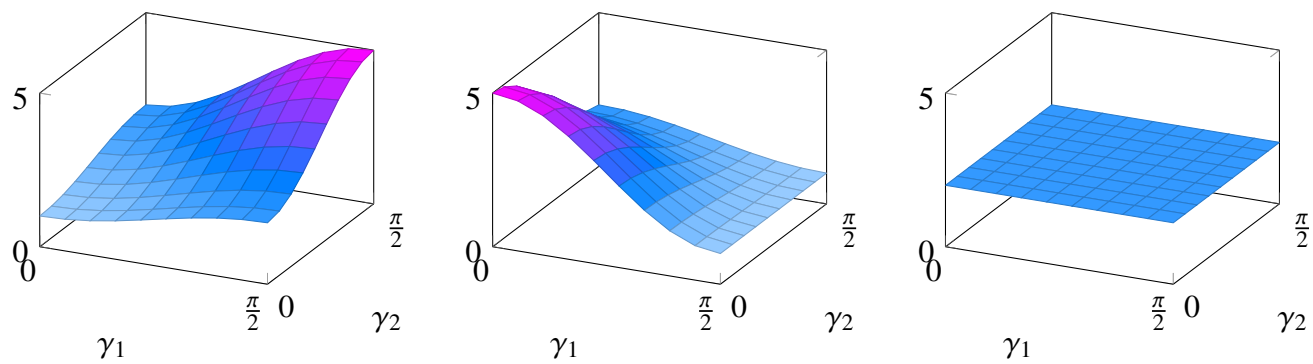

Figure 6: (From left to right) Bob's payoff as a function of his γ_1, γ_2 if Alice 1) cooperates, 2) defects, or 3) abstains. Here, Bob sets $\alpha_1 = \alpha_2 = \pi/4$ and $\beta_1 = \beta_2 = 0$

If Bob sets $\gamma_1 = \gamma_2 = \pi/4$, he can gain a reasonable advantage when Alice cooperates, but also when she defects. Thus Bob's optimal move might be $U_{B1} = U(\pi/4, \pi/4, 0)$ and $U_{B2} = U(\pi/4, \pi/4, 0)$. These are exactly the same as Eisert's "miracle move" M in the 2×2 Prisoner's Dilemma. So in the Optional Prisoner's Dilemma, Bob's best strategy is to apply $M \otimes M$ on his two qubits.

If Bob plays $M \otimes M$, the graphs of his and Alice's expected payoffs reduce to the ones given in Figure 7.

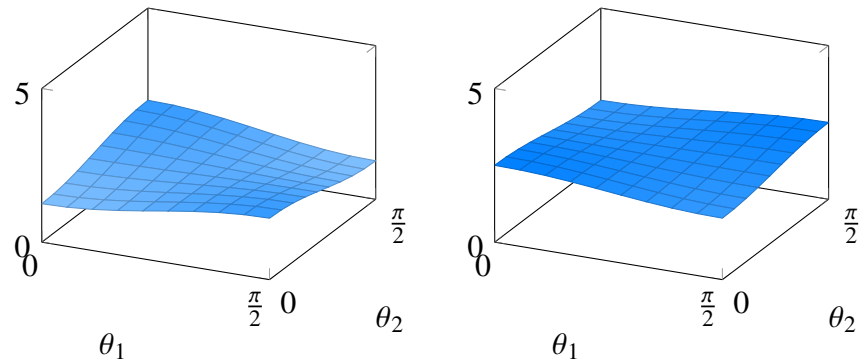

Figure 7: (Left) Alice's payoff as a function of her θ_1, θ_2. (Right) Bob's payoff as a function of Alice's θ_1, θ_2. Assuming Bob plays $M \otimes M$.

Since Alice is restricted to $\theta_1, \theta_2 \in \{0, \pi/2\}$, it's sufficient to look at the four cases of (θ_1, θ_2), i.e. the corners: $(0,0)$, $(0,\pi/2)$, $(\pi/2,0)$, $(\pi/2,\pi/2)$. The payoffs in these cases are listed in Figure 8.

(θ_1, θ_2), Alice's play	Alice's payoff	Bob's payoff
$(0,0)$ Alice cooperates	1.25	2.5
$(0,\pi/2)$ Alice abstains	2	2
$(\pi/2,0)$ Alice abstains	2	2
$(\pi/2,\pi/2)$ Alice defects	1.25	2.5

Figure 8: Final payoffs for the quantum Optional Prisoner's Dilemma, if Bob plays his best move $M \otimes M$

Bob gains an advantage over Alice if she cooperates or defects. However, if Alice abstains, Bob no longer has an advantage. Abstaining is also the classically best strategy. Thus, in the Optional Prisoner's Dilemma, Bob has no quantum advantage against a rational classical player. This contrasts with the original 2×2 quantum Prisoner's Dilemma, in which the quantum strategy could beat the classical one every time.

We see merely allowing one player the use of quantum strategies doesn't result in an unbeatable strategy. The existence of "forcing moves" like abstaining will dissipate the quantum player's advantage.

3 Modified 3×3 Optional Prisoner's Dilemma

3.1 Modified payoff table

However, a modification to the payoff table in the Optional Prisoner's Dilemma causes Bob's quantum advantage to return. This can be achieved by imbalancing the payoffs: if one or more

players abstain, the abstaining player receives a 2, while a cooperating or defecting player receives a 2.5. The justification for this change is that often, indecision is penalized in the real world. An indecisive government, for example, may be less favored than a decisive one that occasionally makes mistakes. Similarly, indecisive doctors may be less useful in serious cases that require quick judgement.

The new payoff table with C (cooperate), D (defect), and A (abstain) is given below in Figure 9.

		Bob		
		C	D	A
	C	(3, 3)	(0, 5)	(2.5, 2)
Alice	D	(5, 0)	(1, 1)	(2.5, 2)
	A	(2, 2.5)	(2, 2.5)	(2, 2)

Figure 9: Payoff table for the modified Optional Prisoner's Dilemma. As usual, the format is $(\$_A, \$_B)$, where $\$_A$ is Alice's payoff and $\$_B$ is Bob's payoff.

Abstaining is still the classically optimal strategy, with a guaranteed payoff of at least 2.

3.2 Payoff calculations

The quantum setup is the same as for the Optional Prisoner's Dilemma in Section 2.2. Alice and Bob each have two qubits they act on with unitary gates. Measuring $|00\rangle$ is associated with "cooperate," $|11\rangle$ with "defect," and $|01\rangle$ or $|10\rangle$ with "abstain." The general unitary gate is parametrized as $U(\theta, \alpha, \beta)$.

However, Alice and Bob's payoffs are slightly different than in the previous section, reflecting the modified payoff table.

$$\begin{aligned}\langle \$_A \rangle = {} & 3\left|\langle 0000|\psi_f\rangle\right|^2 + 0\left|\langle 0011|\psi_f\rangle\right|^2 + 2.5\left|\langle 0010|\psi_f\rangle\right|^2 + 2.5\left|\langle 0001|\psi_f\rangle\right|^2 + \\ & 5\left|\langle 1100|\psi_f\rangle\right|^2 + 1\left|\langle 1111|\psi_f\rangle\right|^2 + 2.5\left|\langle 1110|\psi_f\rangle\right|^2 + 2.5\left|\langle 1101|\psi_f\rangle\right|^2 + \\ & 2\left|\langle 0100|\psi_f\rangle\right|^2 + 2\left|\langle 0111|\psi_f\rangle\right|^2 + 2\left|\langle 0110|\psi_f\rangle\right|^2 + 2\left|\langle 0101|\psi_f\rangle\right|^2 + \\ & 2\left|\langle 1000|\psi_f\rangle\right|^2 + 2\left|\langle 1011|\psi_f\rangle\right|^2 + 2\left|\langle 1010|\psi_f\rangle\right|^2 + 2\left|\langle 1001|\psi_f\rangle\right|^2\end{aligned}$$

$$\begin{aligned}\langle \$_B \rangle = {} & 3\left|\langle 0000|\psi_f\rangle\right|^2 + 5\left|\langle 0011|\psi_f\rangle\right|^2 + 2\left|\langle 0010|\psi_f\rangle\right|^2 + 2\left|\langle 0001|\psi_f\rangle\right|^2 + \\ & 0\left|\langle 1100|\psi_f\rangle\right|^2 + 1\left|\langle 1111|\psi_f\rangle\right|^2 + 2\left|\langle 1110|\psi_f\rangle\right|^2 + 2\left|\langle 1101|\psi_f\rangle\right|^2 + \\ & 2.5\left|\langle 0100|\psi_f\rangle\right|^2 + 2.5\left|\langle 0111|\psi_f\rangle\right|^2 + 2\left|\langle 0110|\psi_f\rangle\right|^2 + 2\left|\langle 0101|\psi_f\rangle\right|^2 + \\ & 2.5\left|\langle 1000|\psi_f\rangle\right|^2 + 2.5\left|\langle 1011|\psi_f\rangle\right|^2 + 2\left|\langle 1010|\psi_f\rangle\right|^2 + 2\left|\langle 1001|\psi_f\rangle\right|^2\end{aligned}$$

Alice, the classical player, is restricted to $U(\theta, 0, 0)$ with $\theta \in \{0, \pi/2\}$. Bob, the quantum player, has access to all $U(\theta, \alpha, \beta)$ with $\theta \in [0, \pi/2]$ and $\alpha, \beta \in [-\pi, \pi]$.

3.3 Optimal quantum strategy

Let $U_{A1} = U(\theta_1, 0, 0)$, $U_{A2} = U(\theta_2, 0, 0)$, $U_{B1} = U(\gamma_1, \alpha_1, \beta_1)$, and $U_{B2} = U(\gamma_2, \alpha_2, \beta_2)$. Carrying out the calculations for $|\psi_f\rangle$ gives the equations in Appendix B. This is similar to the equations for the unmodified Optional Prisoner's Dilemma in Appendix A, but with different coefficients.

As before, we use these equations and apply casework to Bob's payoff $\langle \$_B \rangle$ depending on each of Alice's choices. It turns out that Bob's optimal strategy is the same as before: Bob sets $\gamma_1 = \gamma_2 = \pi/4$, $\alpha_1 = \alpha_2 = \pi/4$, and $\beta_1 = \beta_2 = 0$. Thus, Bob's optimal strategy is still to apply $M \otimes M$ on his two qubits, where M is Eisert's "miracle move."

The graphs of Bob and Alice's expected payoffs if Bob plays $M \otimes M$ are given below in Figure 10.

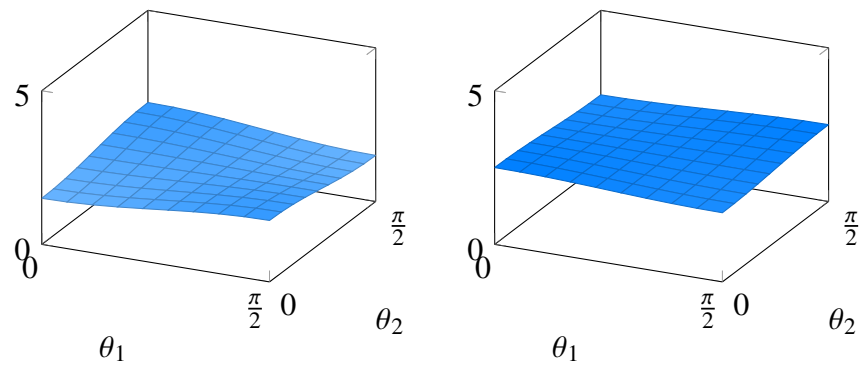

Figure 10: (Left) Alice's payoff as a function of her θ_1, θ_2. (Right) Bob's payoff as a function of Alice's θ_1, θ_2. Assuming Bob plays $M \otimes M$.

As the classical player, Alice is restricted to $\theta_1, \theta_2 \in \{0, \pi/2\}$. Therefore, it's sufficient to look at the four corners: $(0, 0)$, $(0, \pi/2)$, $(\pi/2, 0)$, $(\pi/2, \pi/2)$. Bob and Alice's payoffs for these 4 cases are listed in Figure 11.

(θ_1, θ_2), Alice's play	Alice's payoff	Bob's payoff
$(0, 0)$ Alice cooperates	1.5	2.5
$(0, \pi/2)$ Alice abstains	2	2.25
$(\pi/2, 0)$ Alice abstains	2	2.25
$(\pi/2, \pi/2)$ Alice defects	1.5	2.5

Figure 11: Final payoffs for the modified quantum Optional Prisoner's Dilemma, if Bob plays his best move $M \otimes M$.

Unlike before in the Optional Prisoner's Dilemma, Bob has an advantage in all cases. Intuitively, this makes sense: Bob's quantum strategy can exploit the imbalances in the payoff table to guarantee a higher net return. This toy model highlights that while quantum strategies can provide an advantage over classical ones, the structure of the game matters. In the presence of "forcing moves"

that guarantee a fixed payoff, the quantum strategy may not even have an advantage over the classical one.

This paper shows a natural way of extending Eisert et al.'s original quantum Prisoner's Dilemma to the general N-choice case. While the applications of these quantum versions are limited, they still highlight the richer range of strategies that arise after applying quantum computing to classical game theory. Given the high applicability of Prisoner's Dilemma in several fields, perhaps their quantum versions can find a use as a generalization of their classical counterpart.

References

[1] Jens Eisert, Martin Wilkens, and Maciej Lewenstein. "Quantum Games and Quantum Strategies". In: *Physical Review Letters* 83.15 (Oct. 1999), pp. 3077–3080. ISSN: 1079-7114. DOI: 10.1103/physrevlett.83.3077. URL: http://dx.doi.org/10.1103/PhysRevLett.83.3077.

[2] Adrian P. Flitney and Derek Abbott. *An introduction to quantum game theory*. 2002. arXiv: quant-ph/0208069 [quant-ph]. URL: https://arxiv.org/abs/quant-ph/0208069.

[3] Zhao Song and The Anh Han. *Emergence of Cooperation and Commitment in Optional Prisoner's Dilemma*. 2025. arXiv: 2508.06702 [cs.GT]. URL: https://arxiv.org/abs/2508.06702.

4 Appendix A: Alice and Bob's Payoffs (OPD)

$$
\begin{aligned}
\langle \$_A \rangle = \; & \frac{3}{4}\Big|2\cos\theta_1\cos\theta_2\cos\gamma_1\cos\gamma_2\cos(\alpha_1+\alpha_2) + 2i\sin\theta_1\sin\theta_2\sin\gamma_1\sin\gamma_2\sin(\beta_1+\beta_2)\Big|^2 + \\
& \frac{0}{4}\Big|-2\cos\theta_1\cos\theta_2\sin\gamma_1\sin\gamma_2\cos(\beta_1+\beta_2) + 2i\sin\theta_1\sin\theta_2\cos\gamma_1\cos\gamma_2\sin(\alpha_1+\alpha_2)\Big|^2 + \\
& \frac{2}{4}\Big|2i\cos\theta_1\cos\theta_2\cos\gamma_1\sin\gamma_2\cos(\alpha_1-\beta_2) + 2\sin\theta_1\sin\theta_2\sin\gamma_1\cos\gamma_2\sin(\beta_1-\alpha_2)\Big|^2 + \\
& \frac{2}{4}\Big|2i\cos\theta_1\cos\theta_2\sin\gamma_1\cos\gamma_2\cos(\beta_1-\alpha_2) - 2\sin\theta_1\sin\theta_2\cos\gamma_1\sin\gamma_2\sin(\alpha_1-\beta_2)\Big|^2 + \\
& \\
& \frac{5}{4}\Big|-2\sin\theta_1\sin\theta_2\cos\gamma_1\cos\gamma_2\cos(\alpha_1+\alpha_2) - 2i\cos\theta_1\cos\theta_2\sin\gamma_1\sin\gamma_2\sin(\beta_1+\beta_2)\Big|^2 + \\
& \frac{1}{4}\Big|2\sin\theta_1\sin\theta_2\sin\gamma_1\sin\gamma_2\cos(\beta_1+\beta_2) - 2i\cos\theta_1\cos\theta_2\cos\gamma_1\cos\gamma_2\sin(\alpha_1+\alpha_2)\Big|^2 + \\
& \frac{2}{4}\Big|-2i\sin\theta_1\sin\theta_2\cos\gamma_1\sin\gamma_2\cos(\alpha_1-\beta_2) - 2\cos\theta_1\cos\theta_2\sin\gamma_1\cos\gamma_2\sin(\beta_1-\alpha_2)\Big|^2 + \\
& \frac{2}{4}\Big|-2i\sin\theta_1\sin\theta_2\sin\gamma_1\cos\gamma_2\cos(\beta_1-\alpha_2) + 2\cos\theta_1\cos\theta_2\cos\gamma_1\sin\gamma_2\sin(\alpha_1-\beta_2)\Big|^2 + \\
& \\
& \frac{2}{4}\Big|2i\cos\theta_1\cos\theta_2\cos\gamma_1\cos\gamma_2\cos(\alpha_1+\alpha_2) + 2\sin\theta_1\cos\theta_2\sin\gamma_1\sin\gamma_2\sin(\beta_1+\beta_2)\Big|^2 + \\
& \frac{2}{4}\Big|-2i\cos\theta_1\sin\theta_2\sin\gamma_1\sin\gamma_2\cos(\beta_1+\beta_2) + 2\sin\theta_1\cos\theta_2\cos\gamma_1\cos\gamma_2\sin(\alpha_1+\alpha_2)\Big|^2 + \\
& \frac{2}{4}\Big|-2\cos\theta_1\sin\theta_2\cos\gamma_1\sin\gamma_2\cos(\alpha_1-\beta_2) - 2i\sin\theta_1\cos\theta_2\sin\gamma_1\cos\gamma_2\sin(\beta_1-\alpha_2)\Big|^2 + \\
& \frac{2}{4}\Big|-2\cos\theta_1\sin\theta_2\sin\gamma_1\cos\gamma_2\cos(\beta_1-\alpha_2) + 2i\sin\theta_1\cos\theta_2\cos\gamma_1\sin\gamma_2\sin(\alpha_1-\beta_2)\Big|^2 + \\
& \\
& \frac{2}{4}\Big|2i\sin\theta_1\cos\theta_2\cos\gamma_1\cos\gamma_2\cos(\alpha_1+\alpha_2) + 2\cos\theta_1\sin\theta_2\sin\gamma_1\sin\gamma_2\sin(\beta_1+\beta_2)\Big|^2 + \\
& \frac{2}{4}\Big|-2i\sin\theta_1\cos\theta_2\sin\gamma_1\sin\gamma_2\cos(\beta_1+\beta_2) + 2\cos\theta_1\sin\theta_2\cos\gamma_1\cos\gamma_2\sin(\alpha_1+\alpha_2)\Big|^2 + \\
& \frac{2}{4}\Big|-2\sin\theta_1\cos\theta_2\cos\gamma_1\sin\gamma_2\cos(\alpha_1-\beta_2) - 2i\cos\theta_1\sin\theta_2\sin\gamma_1\cos\gamma_2\sin(\beta_1-\alpha_2)\Big|^2 + \\
& \frac{2}{4}\Big|-2\sin\theta_1\cos\theta_2\sin\gamma_1\cos\gamma_2\cos(\beta_1-\alpha_2) + 2i\cos\theta_1\sin\theta_2\cos\gamma_1\sin\gamma_2\sin(\alpha_1-\beta_2)\Big|^2
\end{aligned}
$$

$$
\begin{aligned}
\langle \$_B \rangle = \frac{3}{4}\Big|&2\cos\theta_1\cos\theta_2\cos\gamma_1\cos\gamma_2\cos(\alpha_1+\alpha_2) + 2i\sin\theta_1\sin\theta_2\sin\gamma_1\sin\gamma_2\sin(\beta_1+\beta_2)\Big|^2 + \\
\frac{5}{4}\Big|&-2\cos\theta_1\cos\theta_2\sin\gamma_1\sin\gamma_2\cos(\beta_1+\beta_2) + 2i\sin\theta_1\sin\theta_2\cos\gamma_1\cos\gamma_2\sin(\alpha_1+\alpha_2)\Big|^2 + \\
\frac{2}{4}\Big|&2i\cos\theta_1\cos\theta_2\cos\gamma_1\sin\gamma_2\cos(\alpha_1-\beta_2) + 2\sin\theta_1\sin\theta_2\sin\gamma_1\cos\gamma_2\sin(\beta_1-\alpha_2)\Big|^2 + \\
\frac{2}{4}\Big|&2i\cos\theta_1\cos\theta_2\sin\gamma_1\cos\gamma_2\cos(\beta_1-\alpha_2) - 2\sin\theta_1\sin\theta_2\cos\gamma_1\sin\gamma_2\sin(\alpha_1-\beta_2)\Big|^2 + \\
\\
\frac{0}{4}\Big|&-2\sin\theta_1\sin\theta_2\cos\gamma_1\cos\gamma_2\cos(\alpha_1+\alpha_2) - 2i\cos\theta_1\cos\theta_2\sin\gamma_1\sin\gamma_2\sin(\beta_1+\beta_2)\Big|^2 + \\
\frac{1}{4}\Big|&2\sin\theta_1\sin\theta_2\sin\gamma_1\sin\gamma_2\cos(\beta_1+\beta_2) - 2i\cos\theta_1\cos\theta_2\cos\gamma_1\cos\gamma_2\sin(\alpha_1+\alpha_2)\Big|^2 + \\
\frac{2}{4}\Big|&-2i\sin\theta_1\sin\theta_2\cos\gamma_1\sin\gamma_2\cos(\alpha_1-\beta_2) - 2\cos\theta_1\cos\theta_2\sin\gamma_1\cos\gamma_2\sin(\beta_1-\alpha_2)\Big|^2 + \\
\frac{2}{4}\Big|&-2i\sin\theta_1\sin\theta_2\sin\gamma_1\cos\gamma_2\cos(\beta_1-\alpha_2) + 2\cos\theta_1\cos\theta_2\cos\gamma_1\sin\gamma_2\sin(\alpha_1-\beta_2)\Big|^2 + \\
\\
\frac{2}{4}\Big|&2i\cos\theta_1\cos\theta_2\cos\gamma_1\cos\gamma_2\cos(\alpha_1+\alpha_2) + 2\sin\theta_1\cos\theta_2\sin\gamma_1\sin\gamma_2\sin(\beta_1+\beta_2)\Big|^2 + \\
\frac{2}{4}\Big|&-2i\cos\theta_1\sin\theta_2\sin\gamma_1\sin\gamma_2\cos(\beta_1+\beta_2) + 2\sin\theta_1\cos\theta_2\cos\gamma_1\cos\gamma_2\sin(\alpha_1+\alpha_2)\Big|^2 + \\
\frac{2}{4}\Big|&-2\cos\theta_1\sin\theta_2\cos\gamma_1\sin\gamma_2\cos(\alpha_1-\beta_2) - 2i\sin\theta_1\cos\theta_2\sin\gamma_1\cos\gamma_2\sin(\beta_1-\alpha_2)\Big|^2 + \\
\frac{2}{4}\Big|&-2\cos\theta_1\sin\theta_2\sin\gamma_1\cos\gamma_2\cos(\beta_1-\alpha_2) + 2i\sin\theta_1\cos\theta_2\cos\gamma_1\sin\gamma_2\sin(\alpha_1-\beta_2)\Big|^2 + \\
\\
\frac{2}{4}\Big|&2i\sin\theta_1\cos\theta_2\cos\gamma_1\cos\gamma_2\cos(\alpha_1+\alpha_2) + 2\cos\theta_1\sin\theta_2\sin\gamma_1\sin\gamma_2\sin(\beta_1+\beta_2)\Big|^2 + \\
\frac{2}{4}\Big|&-2i\sin\theta_1\cos\theta_2\sin\gamma_1\sin\gamma_2\cos(\beta_1+\beta_2) + 2\cos\theta_1\sin\theta_2\cos\gamma_1\cos\gamma_2\sin(\alpha_1+\alpha_2)\Big|^2 + \\
\frac{2}{4}\Big|&-2\sin\theta_1\cos\theta_2\cos\gamma_1\sin\gamma_2\cos(\alpha_1-\beta_2) - 2i\cos\theta_1\sin\theta_2\sin\gamma_1\cos\gamma_2\sin(\beta_1-\alpha_2)\Big|^2 + \\
\frac{2}{4}\Big|&-2\sin\theta_1\cos\theta_2\sin\gamma_1\cos\gamma_2\cos(\beta_1-\alpha_2) + 2i\cos\theta_1\sin\theta_2\cos\gamma_1\sin\gamma_2\sin(\alpha_1-\beta_2)\Big|^2
\end{aligned}
$$

5 Appendix B: Alice and Bob's Payoffs (Modified OPD)

$$
\begin{aligned}
\langle \$_A \rangle = \; & \frac{3}{4}\Big|2\cos\theta_1\cos\theta_2\cos\gamma_1\cos\gamma_2\cos(\alpha_1+\alpha_2) + 2i\sin\theta_1\sin\theta_2\sin\gamma_1\sin\gamma_2\sin(\beta_1+\beta_2)\Big|^2 + \\
& \frac{0}{4}\Big|-2\cos\theta_1\cos\theta_2\sin\gamma_1\sin\gamma_2\cos(\beta_1+\beta_2) + 2i\sin\theta_1\sin\theta_2\cos\gamma_1\cos\gamma_2\sin(\alpha_1+\alpha_2)\Big|^2 + \\
& \frac{2.5}{4}\Big|2i\cos\theta_1\cos\theta_2\cos\gamma_1\sin\gamma_2\cos(\alpha_1-\beta_2) + 2\sin\theta_1\sin\theta_2\sin\gamma_1\cos\gamma_2\sin(\beta_1-\alpha_2)\Big|^2 + \\
& \frac{2.5}{4}\Big|2i\cos\theta_1\cos\theta_2\sin\gamma_1\cos\gamma_2\cos(\beta_1-\alpha_2) - 2\sin\theta_1\sin\theta_2\cos\gamma_1\sin\gamma_2\sin(\alpha_1-\beta_2)\Big|^2 + \\
& \\
& \frac{5}{4}\Big|-2\sin\theta_1\sin\theta_2\cos\gamma_1\cos\gamma_2\cos(\alpha_1+\alpha_2) - 2i\cos\theta_1\cos\theta_2\sin\gamma_1\sin\gamma_2\sin(\beta_1+\beta_2)\Big|^2 + \\
& \frac{1}{4}\Big|2\sin\theta_1\sin\theta_2\sin\gamma_1\sin\gamma_2\cos(\beta_1+\beta_2) - 2i\cos\theta_1\cos\theta_2\cos\gamma_1\cos\gamma_2\sin(\alpha_1+\alpha_2)\Big|^2 + \\
& \frac{2.5}{4}\Big|-2i\sin\theta_1\sin\theta_2\cos\gamma_1\sin\gamma_2\cos(\alpha_1-\beta_2) - 2\cos\theta_1\cos\theta_2\sin\gamma_1\cos\gamma_2\sin(\beta_1-\alpha_2)\Big|^2 + \\
& \frac{2.5}{4}\Big|-2i\sin\theta_1\sin\theta_2\sin\gamma_1\cos\gamma_2\cos(\beta_1-\alpha_2) + 2\cos\theta_1\cos\theta_2\cos\gamma_1\sin\gamma_2\sin(\alpha_1-\beta_2)\Big|^2 + \\
& \\
& \frac{2}{4}\Big|2i\cos\theta_1\cos\theta_2\cos\gamma_1\cos\gamma_2\cos(\alpha_1+\alpha_2) + 2\sin\theta_1\cos\theta_2\sin\gamma_1\sin\gamma_2\sin(\beta_1+\beta_2)\Big|^2 + \\
& \frac{2}{4}\Big|-2i\cos\theta_1\sin\theta_2\sin\gamma_1\sin\gamma_2\cos(\beta_1+\beta_2) + 2\sin\theta_1\cos\theta_2\cos\gamma_1\cos\gamma_2\sin(\alpha_1+\alpha_2)\Big|^2 + \\
& \frac{2}{4}\Big|-2\cos\theta_1\sin\theta_2\cos\gamma_1\sin\gamma_2\cos(\alpha_1-\beta_2) - 2i\sin\theta_1\cos\theta_2\sin\gamma_1\cos\gamma_2\sin(\beta_1-\alpha_2)\Big|^2 + \\
& \frac{2}{4}\Big|-2\cos\theta_1\sin\theta_2\sin\gamma_1\cos\gamma_2\cos(\beta_1-\alpha_2) + 2i\sin\theta_1\cos\theta_2\cos\gamma_1\sin\gamma_2\sin(\alpha_1-\beta_2)\Big|^2 + \\
& \\
& \frac{2}{4}\Big|2i\sin\theta_1\cos\theta_2\cos\gamma_1\cos\gamma_2\cos(\alpha_1+\alpha_2) + 2\cos\theta_1\sin\theta_2\sin\gamma_1\sin\gamma_2\sin(\beta_1+\beta_2)\Big|^2 + \\
& \frac{2}{4}\Big|-2i\sin\theta_1\cos\theta_2\sin\gamma_1\sin\gamma_2\cos(\beta_1+\beta_2) + 2\cos\theta_1\sin\theta_2\cos\gamma_1\cos\gamma_2\sin(\alpha_1+\alpha_2)\Big|^2 + \\
& \frac{2}{4}\Big|-2\sin\theta_1\cos\theta_2\cos\gamma_1\sin\gamma_2\cos(\alpha_1-\beta_2) - 2i\cos\theta_1\sin\theta_2\sin\gamma_1\cos\gamma_2\sin(\beta_1-\alpha_2)\Big|^2 + \\
& \frac{2}{4}\Big|-2\sin\theta_1\cos\theta_2\sin\gamma_1\cos\gamma_2\cos(\beta_1-\alpha_2) + 2i\cos\theta_1\sin\theta_2\cos\gamma_1\sin\gamma_2\sin(\alpha_1-\beta_2)\Big|^2
\end{aligned}
$$

$$
\begin{aligned}
\langle \$_B \rangle = \; & \frac{3}{4}\Big|2\cos\theta_1\cos\theta_2\cos\gamma_1\cos\gamma_2\cos(\alpha_1+\alpha_2) + 2i\sin\theta_1\sin\theta_2\sin\gamma_1\sin\gamma_2\sin(\beta_1+\beta_2)\Big|^2 + \\
& \frac{5}{4}\Big| - 2\cos\theta_1\cos\theta_2\sin\gamma_1\sin\gamma_2\cos(\beta_1+\beta_2) + 2i\sin\theta_1\sin\theta_2\cos\gamma_1\cos\gamma_2\sin(\alpha_1+\alpha_2)\Big|^2 + \\
& \frac{2}{4}\Big|2i\cos\theta_1\cos\theta_2\cos\gamma_1\sin\gamma_2\cos(\alpha_1-\beta_2) + 2\sin\theta_1\sin\theta_2\sin\gamma_1\cos\gamma_2\sin(\beta_1-\alpha_2)\Big|^2 + \\
& \frac{2}{4}\Big|2i\cos\theta_1\cos\theta_2\sin\gamma_1\cos\gamma_2\cos(\beta_1-\alpha_2) - 2\sin\theta_1\sin\theta_2\cos\gamma_1\sin\gamma_2\sin(\alpha_1-\beta_2)\Big|^2 + \\
& \\
& \frac{0}{4}\Big| - 2\sin\theta_1\sin\theta_2\cos\gamma_1\cos\gamma_2\cos(\alpha_1+\alpha_2) - 2i\cos\theta_1\cos\theta_2\sin\gamma_1\sin\gamma_2\sin(\beta_1+\beta_2)\Big|^2 + \\
& \frac{1}{4}\Big|2\sin\theta_1\sin\theta_2\sin\gamma_1\sin\gamma_2\cos(\beta_1+\beta_2) - 2i\cos\theta_1\cos\theta_2\cos\gamma_1\cos\gamma_2\sin(\alpha_1+\alpha_2)\Big|^2 + \\
& \frac{2}{4}\Big| - 2i\sin\theta_1\sin\theta_2\cos\gamma_1\sin\gamma_2\cos(\alpha_1-\beta_2) - 2\cos\theta_1\cos\theta_2\sin\gamma_1\cos\gamma_2\sin(\beta_1-\alpha_2)\Big|^2 + \\
& \frac{2}{4}\Big| - 2i\sin\theta_1\sin\theta_2\sin\gamma_1\cos\gamma_2\cos(\beta_1-\alpha_2) + 2\cos\theta_1\cos\theta_2\cos\gamma_1\sin\gamma_2\sin(\alpha_1-\beta_2)\Big|^2 + \\
& \\
& \frac{2.5}{4}\Big|2i\cos\theta_1\cos\theta_2\cos\gamma_1\cos\gamma_2\cos(\alpha_1+\alpha_2) + 2\sin\theta_1\cos\theta_2\sin\gamma_1\sin\gamma_2\sin(\beta_1+\beta_2)\Big|^2 + \\
& \frac{2.5}{4}\Big| - 2i\cos\theta_1\sin\theta_2\sin\gamma_1\sin\gamma_2\cos(\beta_1+\beta_2) + 2\sin\theta_1\cos\theta_2\cos\gamma_1\cos\gamma_2\sin(\alpha_1+\alpha_2)\Big|^2 + \\
& \frac{2}{4}\Big| - 2\cos\theta_1\sin\theta_2\cos\gamma_1\sin\gamma_2\cos(\alpha_1-\beta_2) - 2i\sin\theta_1\cos\theta_2\sin\gamma_1\cos\gamma_2\sin(\beta_1-\alpha_2)\Big|^2 + \\
& \frac{2}{4}\Big| - 2\cos\theta_1\sin\theta_2\sin\gamma_1\cos\gamma_2\cos(\beta_1-\alpha_2) + 2i\sin\theta_1\cos\theta_2\cos\gamma_1\sin\gamma_2\sin(\alpha_1-\beta_2)\Big|^2 + \\
& \\
& \frac{2.5}{4}\Big|2i\sin\theta_1\cos\theta_2\cos\gamma_1\cos\gamma_2\cos(\alpha_1+\alpha_2) + 2\cos\theta_1\sin\theta_2\sin\gamma_1\sin\gamma_2\sin(\beta_1+\beta_2)\Big|^2 + \\
& \frac{2.5}{4}\Big| - 2i\sin\theta_1\cos\theta_2\sin\gamma_1\sin\gamma_2\cos(\beta_1+\beta_2) + 2\cos\theta_1\sin\theta_2\cos\gamma_1\cos\gamma_2\sin(\alpha_1+\alpha_2)\Big|^2 + \\
& \frac{2}{4}\Big| - 2\sin\theta_1\cos\theta_2\cos\gamma_1\sin\gamma_2\cos(\alpha_1-\beta_2) - 2i\cos\theta_1\sin\theta_2\sin\gamma_1\cos\gamma_2\sin(\beta_1-\alpha_2)\Big|^2 + \\
& \frac{2}{4}\Big| - 2\sin\theta_1\cos\theta_2\sin\gamma_1\cos\gamma_2\cos(\beta_1-\alpha_2) + 2i\cos\theta_1\sin\theta_2\cos\gamma_1\sin\gamma_2\sin(\alpha_1-\beta_2)\Big|^2
\end{aligned}
$$