Nighttime Flare Removal via Wavelet-Guided and Gated-Enhanced Spatial-Frequency Fusion Network

AAAI-26 / IAAI-26 / EAAI-26

Yun Liu[1], Guang Yang[1], Tao Li[1], Weisi Lin[2]

[1] College of Artificial Intelligence, Southwest University, [2] College of Computing and Data Science, Nanyang Technological University

Background

- Nighttime imaging often suffers from **lens flare** caused by scattering and internal reflections from intense lights such as vehicle headlights and street lamps. These artifacts appear as **streaks, halos, or glows** that obscure critical details, degrade perceptual clarity, and impair **downstream vision tasks**.
- Recent deep learning-based approaches have achieved promising results for flare removal, but often overlook **frequency-domain cues** that are critical for capturing **long-range dependencies** and **periodic flare patterns**, resulting in **residual artifacts** or **incomplete flare suppression**, as shown in the right figure.
- Although several learning-based networks have been proposed to leverage frequency-domain features , they still fail to fully exploit **hierarchical structures** and effectively emphasize **flare-related components**.

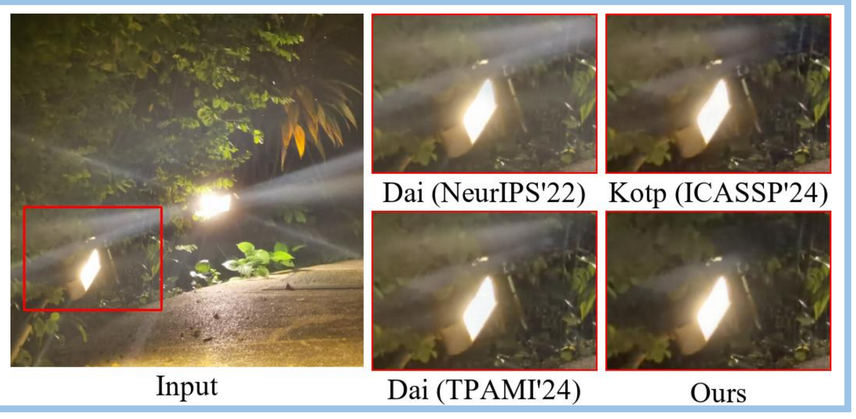

WGSF-Net Framework

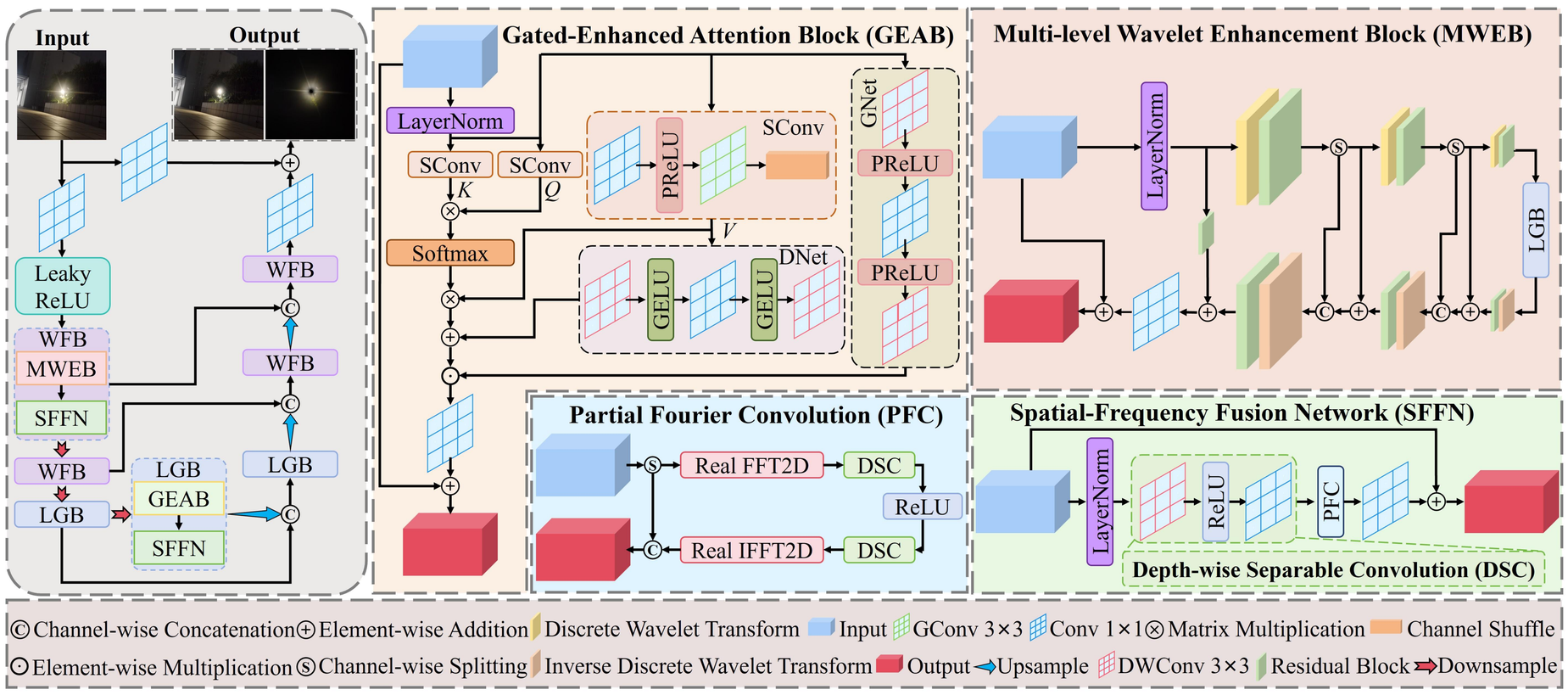

Contributions

- We propose **WGSF-Net**, a novel flare removal framework that integrates **wavelet-guided multi-scale feature extraction** and **gated-enhanced spatial-frequency fusion**, enabling **hierarchical cross-domain representation** and effective **localization of flare-corrupted regions**.
- We propose three key modules: **MWEB** for progressive multi-level frequency refinement, **GEAB** for gated attention on flare regions, and **SFFN** for efficient spatial-frequency fusion. Embedded within **WFB** and **LGB**, these modules enable WGSF-Net to effectively extract multi-scale features and suppress flare artifacts.
- Experiments verify that WGSF-Net **outperforms state-of-the-art methods** on both **real and synthetic** datasets, achieving a **7.93% reduction in LPIPS** on real data and a **2.80% improvement in S-PSNR** on synthetic data.

Visual Comparisons

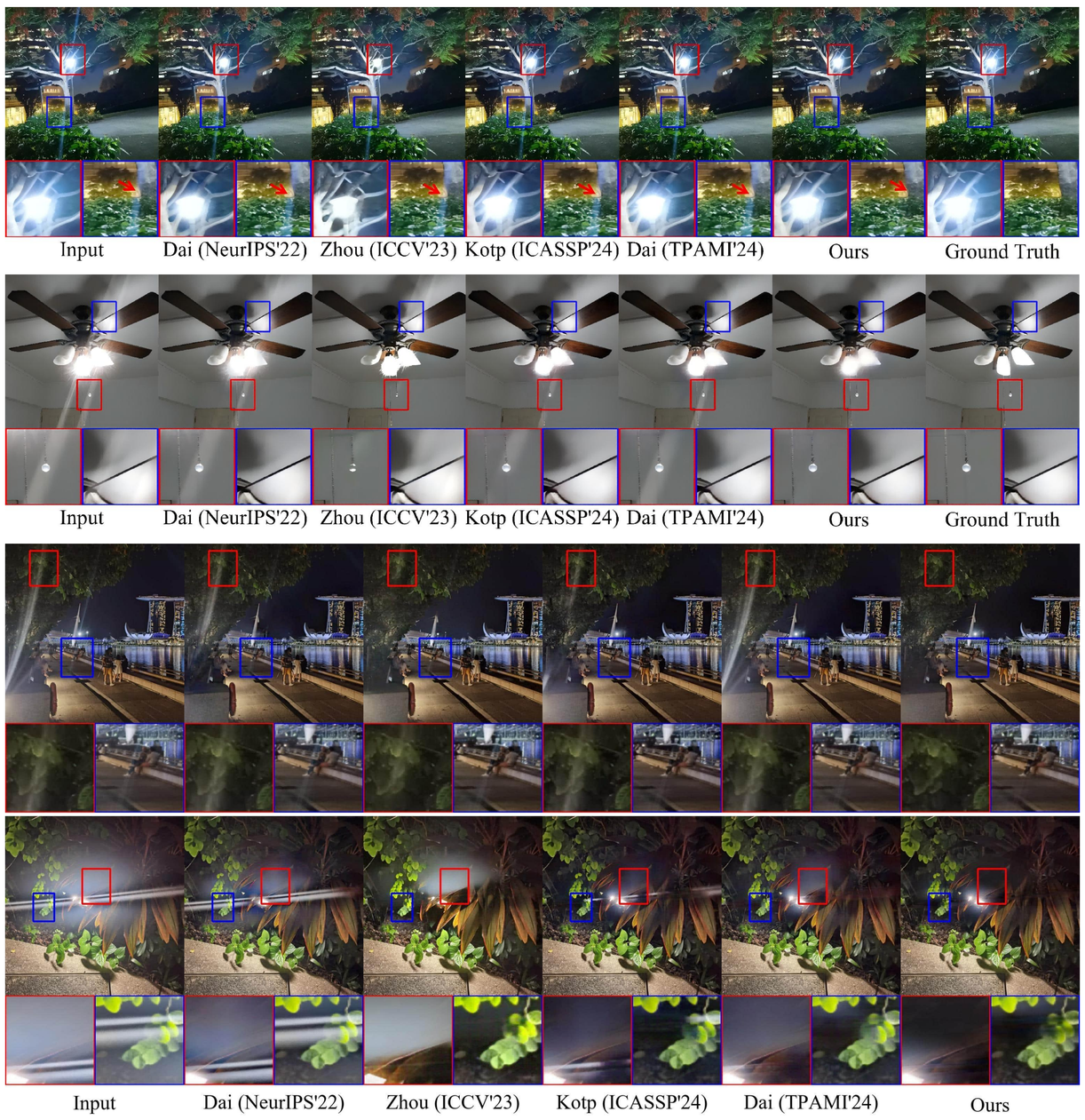

Quantitative Comparisons

Dataset	Method	Publication	PSNR↑	SSIM↑	LPIPS↓	G-PSNR↑	S-PSNR↑
	Input	–	22.56	0.857	0.0777	19.556	13.105
Previous Data Synthesis Pipelines	Zhang (Zhang et al. 2020)	MM'20	21.02	0.784	0.1738	19.868	13.062
	Sharma (Sharma and Tan 2021)	CVPR'21	20.49	0.826	0.1115	17.790	12.648
	Wu (Wu et al. 2021)	ICCV'21	24.61	0.871	0.0598	21.772	16.728
Flare7K Data Synthesis Pipeline	U-Net (Ronneberger, Fischer, and Brox 2015)	MICCAI'15	26.11	0.879	0.055	–	–
	HINet (Chen et al. 2021)	CVPRW'21	26.74	0.882	0.048	–	–
	MPRNet* (Zamir et al. 2021)	CVPR'21	26.14	0.878	0.050	–	–
	Restormer* (Zamir et al. 2022)	CVPR'22	26.28	0.883	0.054	–	–
	Dai (Dai et al. 2022)	NeurIPS'22	26.98	0.890	0.047	23.507	21.563
	FF-Former (Zhang et al. 2023)	CVPRW'23	27.35	0.901	0.044	–	–
	Zhou (Zhou et al. 2023)	ICCV'23	25.18	0.872	0.055	22.112	20.543
	SGSFT (Ma et al. 2025)	TASE'25	27.57	0.897	0.045	23.845	22.636
	FBNet (Lian et al. 2025)	TCE'25	27.35	0.895	0.043	–	–
Flare7K++ Data Synthesis Pipeline	U-Net (Ronneberger, Fischer, and Brox 2015)	MICCAI'15	27.19	0.894	0.0452	23.527	22.647
	HINet (Chen et al. 2021)	CVPRW'21	27.55	0.892	0.0464	24.081	22.907
	MPRNet* (Zamir et al. 2021)	CVPR'21	27.04	0.893	0.0481	23.490	22.267
	Restormer* (Zamir et al. 2022)	CVPR'22	27.60	0.897	0.0447	23.828	22.452
	Dai++ (Dai et al. 2024)	TPAMI'24	27.63	0.894	0.0428	23.949	22.603
	Kotp and Torki (Kotp and Torki 2024)	ICASSP'24	27.66	0.897	0.0422	23.987	22.847
	SGSFT (Ma et al. 2025)	TASE'25	28.08	0.904	0.0416	24.477	23.306
	LPFSformer (Chen et al. 2025)	TCSVT'25	28.24	0.905	0.0422	24.793	23.876
	FBNet (Lian et al. 2025)	TCE'25	27.71	0.903	0.0423	24.226	22.775
	WGSF-Net (Ours)	AAAI'26	**28.52**	**0.907**	**0.0383**	**24.984**	**24.084**

Table 1: Quantitative results on Flare7K real test set. "*" denotes models with reduced parameters due to the limited GPU memory. The best result is highlighted in red and the second best result is highlighted in blue.

Dataset	Method	Publication	PSNR↑	SSIM↑	LPIPS↓	G-PSNR↑	S-PSNR↑
	Input	-	22.77	0.921	0.060	18.804	13.927
Previous Data Synthesis Pipeline	Zhang (Zhang et al. 2020)	MM'20	21.04	0.841	0.136	19.625	14.330
	Sharma (Sharma and Tan 2021)	CVPR'21	20.01	0.865	0.111	–	–
	Wu (Wu et al. 2021)	ICCV'21	27.88	0.952	0.031	–	–
Flare7K Data Synthesis Pipeline	U-Net (Ronneberger, Fischer, and Brox 2015)	MICCAI'15	29.07	0.958	0.022	–	–
	HINet (Chen et al. 2021)	CVPRW'21	29.97	0.959	0.021	–	–
	MPRNet* (Zamir et al. 2021)	CVPR'21	29.87	0.959	0.020	–	–
	Restormer* (Zamir et al. 2022)	CVPR'22	29.45	0.950	0.025	–	–
	Dai (Dai et al. 2022)	NeurIPS'22	30.47	0.965	0.017	25.735	25.279
	FF-Former (Zhang et al. 2023)	CVPRW'23	30.88	0.969	0.019	–	–
	Zhou (Zhou et al. 2023)	ICCV'23	28.78	0.939	0.029	23.779	22.237
Flare7K++ Data Synthesis Pipeline	Dai++ (Dai et al. 2024)	TPAMI'24	29.50	0.962	0.021	24.685	24.155
	Kotp and Torki (Kotp and Torki 2024)	ICASSP'24	29.57	0.961	0.021	24.879	24.458
	WGSF-Net (Ours)	AAAI'26	**30.91**	**0.969**	0.018	**26.264**	**25.988**

Table 2: Quantitative results on Flare7K synthetic test set. "*" denotes models with reduced parameters due to limited GPU memory. The best result is highlighted in red and the second best result is highlighted in blue.

Ablation Studies

Ablation study					Flare7K real test set					Flare7K synthetic test set				
Loss function	$\mathcal{L}_1$	$\mathcal{L}_{vgg}$	$\mathcal{L}_{fft}$	$\mathcal{L}_{rec}$	PSNR↑	SSIM↑	LPIPS↓	G-PSNR↑	S-PSNR↑	PSNR↑	SSIM↑	LPIPS↓	G-PSNR↑	S-PSNR↑
	✓	✗	✗	✗	28.18	0.899	0.0491	24.906	22.778	29.29	0.958	0.0307	24.534	22.992
	✓	✓	✗	✗	28.35	0.903	0.0415	24.905	23.770	30.22	0.966	0.0205	25.276	25.213
	✓	✓	✓	✗	28.46	**0.907**	0.0408	24.956	23.994	30.01	0.963	0.0236	25.180	24.573
Network components	SFFN	GEAB	MWEB	ResBlock	PSNR↑	SSIM↑	LPIPS↓	G-PSNR↑	S-PSNR↑	PSNR↑	SSIM↑	LPIPS↓	G-PSNR↑	S-PSNR↑
	✗	✓	✓	✓	28.15	0.905	0.0416	24.660	23.852	29.26	0.962	0.0231	24.694	24.363
	✓	✗	✓	✓	28.33	0.905	0.0414	24.733	23.508	29.51	0.962	0.0240	24.834	24.178
	✓	✓	✗	✓	28.42	0.904	0.0419	**25.030**	23.824	30.11	0.966	0.0217	25.306	24.823
	✓	✓	✓	✗	28.44	0.905	0.0397	25.023	23.985	30.33	**0.969**	0.0203	25.331	25.611
	Modules				PSNR↑	SSIM↑	LPIPS↓	G-PSNR↑	S-PSNR↑	PSNR↑	SSIM↑	LPIPS↓	G-PSNR↑	S-PSNR↑
	w/o WFB				28.25	0.905	0.0405	24.655	23.787	29.81	0.967	0.0212	24.849	24.667
	w/o LGB				28.09	0.904	0.0438	24.597	23.008	29.95	0.964	0.0235	24.950	24.442
Our full WGSF-Net framework					**28.52**	**0.907**	**0.0383**	24.984	**24.084**	**30.91**	**0.969**	**0.0182**	**26.264**	**25.988**

Table 3: Ablation studies on various configurations. Best results are highlighted in red.

Conclusion

- We propose an end-to-end flare removal network, **WGSF-Net**, integrating **multi-level wavelet-guided features** with a **gated-enhanced attention mechanism** for effective **spatial–frequency fusion**.
- To fully and selectively leverage frequency-domain features, we design three key modules: **MWEB** for **coarse-to-fine multi-scale frequency feature extraction**, **GEAB** for **adaptive attention to flare-related regions**, and **SFFN** for fusing spatial and frequency features.
- Quantitative and qualitative comparisons on both **real and synthetic datasets** demonstrate that WGSF-Net consistently outperforms **state-of-the-art** methods in removing flare artifacts.

Paper

Code