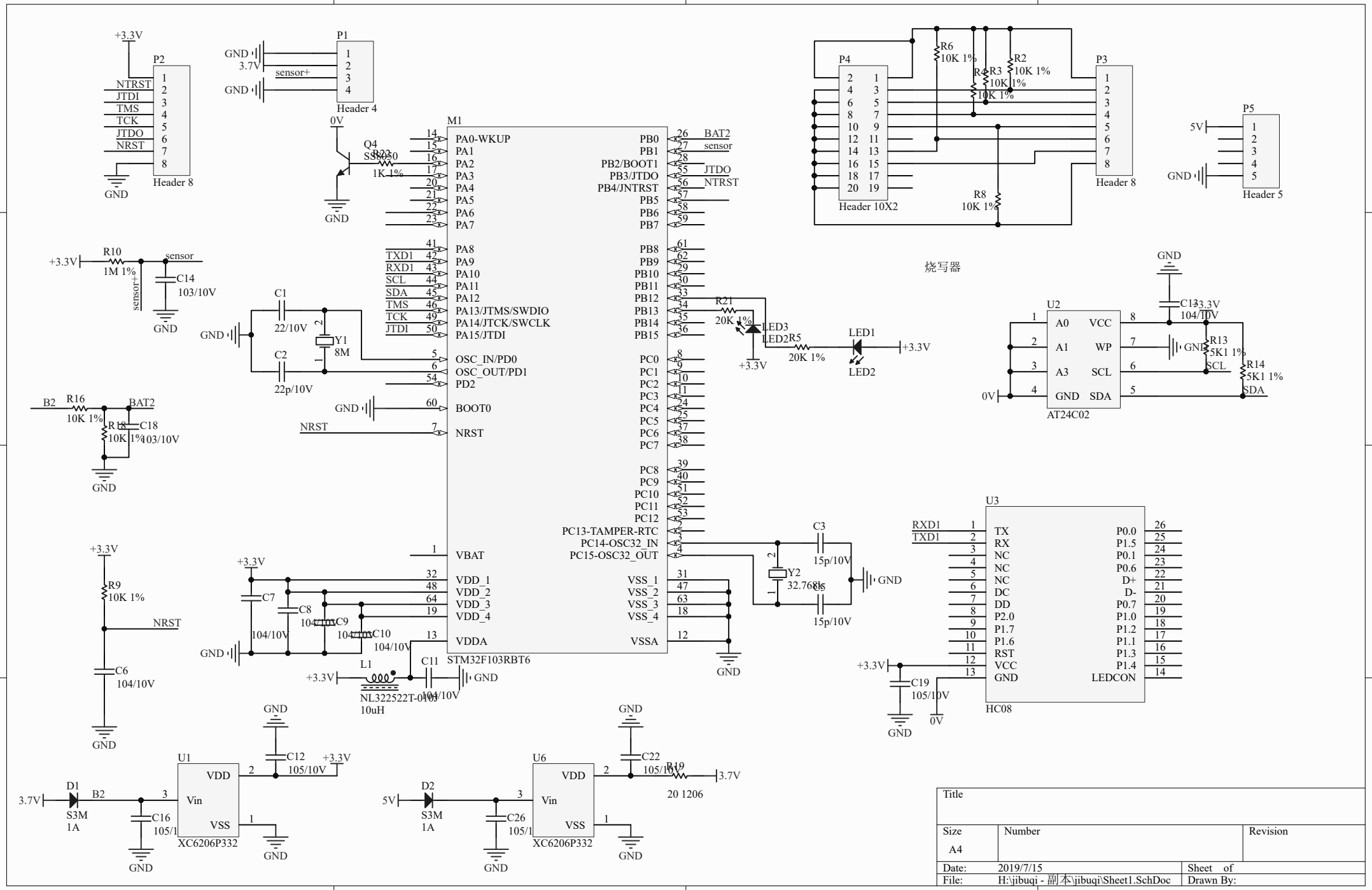

Title		
Size A4	Number	Revision
Date: 2019/7/15		Sheet of
File: H:\jibuqi - 副本\jibuqi\Sheet1.SchDoc		Drawn By: