Markup Languages and Data Formats

Jan Masner

Consultations

- Thursday
- 12:30 – 14:00
- Please, send an email in advance
- Other times and during the examination period by email appointment only

Jan Masner

PEF E305

masner@pef.czu.cz

Exam Credits

Credit

- Active participation in seminars
  - at least one (active) during the semester
- Formation of a project group
- Submission of the project context package
- Semester project

Exam

- Test center
- Grading based on the project and the test

Exam

Test center

- Moodle test
- Max 50 points
- Min 30 points
- Grade = project + test

Oral exam

- For a grade improvement
- Minimal points required
- Discussion on the topics from lectures
- The grade can be better or worse

= on request

Exam Terms in IS

Regular

- Only for entering the grade in IS
- If you agree with the grade based on points

Oral exam

- Minimal points required
- See details in Moodle

Attendance

- Seminars
  - **Based on instructions from teachers**
  - Bonus points for activity
- Lectures
  - Additional points

Semester Project

- 1st attempt
  - Deadline based on seminar → moodle
- 2nd attempt – reworks, corrections
  - 3 weeks after 1st submission

No or late submission = NO CREDIT

Semester Project

https://moodle.czu.cz/mod/page/view.php?id=831569

CZ

https://moodle.czu.cz/mod/page/view.php?id=834057

EN

Lectures and Seminars

Schedule, topics

(can be slightly changed)

Lectures

Week	Topic
1	Markup Languages and Data formats
2	XML, DTD
3	XML Schema Definition
4	XML Transformations
5	HTML
6	HTML Semantics, Metadata, CSS (EN: study block)
7	JSON Schema
8	Data Exchange
9	Data Formats, Big Data
10	XPath, XQuery, XLink, XPointer (EN: study block)
11	Other XML-related Technologies
12	Exam Pre-term

Introduction to Markup Languages

Did you use JSON, XML or HTML?

Basic Concepts

- Markup language – a way to transmit or store data
- Contains data and metadata
- Text format
  - Human-readable
  - Machine-readable

Basic Concepts

- Markup languages itself are only a carrier
- Interpretation, validation, presentation
  - Everything is a matter of software/people
- Markup languages vs Programming languages

Markup Languages

- GenCode, GML, SGML, **XML, HTML**, TeX, **JSON**, YAML, …
- Plenty of **XML-based** languages
  - MathML
  - DocBook
  - KML
  - OOXML
  - RSS
  - ….

W3C - World Wide Web Consortium

- Led by Timothy Berners-Lee
- Members – experts from companies like Google, Apple, Microsoft, … (around 500)
- Maintains and develops web standards
- Standards = Specifications

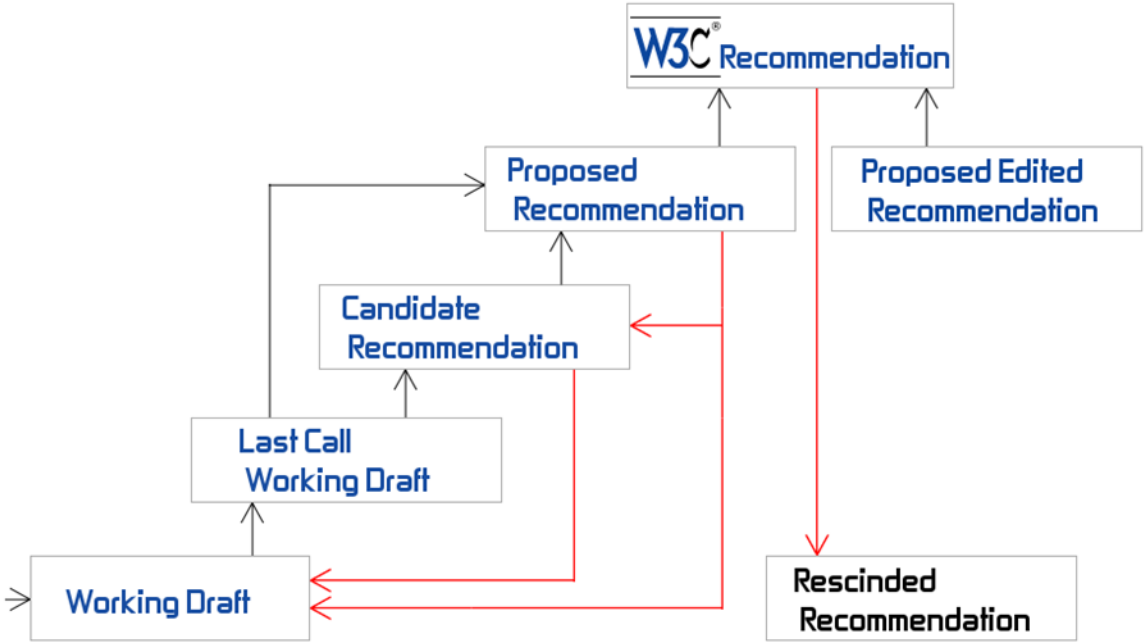

Where do we use markup languages?

Wide Range of Applications

- Storing semi-structured data
- Settings, configurations
- Open data
- **Data-interchange**
  - Frontend to backend communications
  - Web services
- **World Wide Web (web sites)**
- Metadata formats

Wide Range of Applications

- GUI
- Graphics(SVG)
- REST API
- RSS, Sitemaps
- MS Office
- Books
- …many other

XML

XML eXtensible Markup Language

- Based on SGML
- It is only a language and following rules
- Data carrier – not for displaying data
- Metalanguage - a tool for creating new languages
- Does not contain formatting tools
- W3C Recommendation

XML Document is:

Well-formed

- Check for well-formedness
- Check the XML **syntax**
- Proper nesting, closing tags, quotes,…

Valid

- Document structure
- Data format, types
- Number of elements,…
- **XML Schema**
- DTD, Schematron, Relax-NG

XML Syntax

Element

Start tag

Content

End tag

```
<p class="foo">This is a paragraph.</p>
```

Attribute name

value

XML Syntax - characters

Parentheses	( )
Square Brackets	[ ]
Angle Brackets	< >
Braces	{ }
Slashes	/ \
Quotes	" (not „“)

XML Syntax - characters

Comma	,
Single quote, apostrophe	', ‘
Dash, underscore	-, _
Colon	:
Semicolon	;

Element

opening tag

closing tag

```
<name>...</name>
```

element name | content | forward slash

Attribute and value

```
<elm some_name="value"
```

attribute name

quotes

Syntax – Elements, Tags

- Element always have closing tags
  - <tag>This is paragraph. **</tag>**
  - <tag**/>**
- Proper nesting (no overlapping)
  - **Wrong **
  - **Right**
- All tags are case sensitive
  - <Library>Tag
  - <library>Different tag

Tag Names

- Allowed characters
  - Letters, Numbers,Other characters
- At the beginning of tag
  - Only letter
  - No xml
    - **wrong <xmltext>, right <textxml>**
- No spaces
- Convention - Small letters, No national characters

Syntax - Attributes

- Attribute values are in quotes
  - **<img src=image.jpg />** wrong
  - **<img src="image.jpg" />** right
  - double **(" ")** or single **(' ')** quotes

Document Structure

```
<?xml version="1.0" encoding="UTF-8"?>
<root_element>
    <child>
        <subchild>.....</subchild>
        <subchild>.....</subchild>
    </child>
</root_element>
```

Root Element of XML

Sub-Element of <student> Node

Attribute

```
<student>
    <male std="1st">
      <name>John</name>
      <age>6</age>
      <marks>90.45</marks>
    </male>
</student>
```

Sub-Element of <male> Element

www.c4learn.com

www.c4learn.com

Text Value / Number Value of <marks> element

HTML

A language of WWW

HTML

- HyperText Markup Language
- Markup language for World Wide Web (WWW)
- First versions based on SGML
- XHTML followed XML syntax
- HTML5 – standalone language
- Fixed set of tags
- + CSS & JavaScript

HTML Syntax

- Based on XML
- HTML 5, XHTML 5
- Consists of **elements, tags, attributes**

Syntax HTML 5

Unclosed tags
Case insensitive

```
<element>
        content
</element>
<element/>
<element>
```

Attributes without values

```
<tag attribute="value">
<tag attribute=value>
<tag attribute>
```

XHTML 5 (XML)

Closed tags
Small case characters only

```
<element>
        content
</element>
<element/>
```
~~<element>~~

Attributes with values

```
<tag attribute="value">
```
~~<tag attribute=value>~~
~~<tag attribute>~~

Technologies related to XML

- Querying in XML
- **XPath**
  - Addressing nodes in XML
- **XQuery**
  - Query language for XML
  - Uses XPath
- **XLink** – easier reference in the XML documents
  - Creates hyperlinks
- **XPointer** – more accurate targeting of links
  - Allows you to select a specific element in a document

Technologies related to XML

- **XSL** – eXtensible Stylesheet Language
  - Transformations of XML
- **SVG** – vector graphics format
  - Application of XML
- **DocBook**
  - Language for creating texts

CSV, JSON

CSV (Comma-separated values)

- Very simple data format
- Delimited text file
- Export and import to MS Excel
- For tabular data, one line one record
- First line often column names
- Not fully standardized

Jan	Novák	INFO	1990
Petr	Novotný	PAE	1993

CSV syntax

European version uses **;**
(semicolon)
as a **separator**

Jan, Novák, INFO, 1990

Petr, Novotný, PAE, 1993

OR optionally values in quotes

"Jan", "Novák", INFO, 1990

"Peter, Jan", "Novotný", INFO, 1993

JSON
JavaScript Object Notation

- Data-interchange format
- Standardized under **ECMA-404**
- Similar usage as XML
- Easy conversion from programming languages
- Apps frontend <-> server (backend)
- JSON Schema

JSON Syntax

- Objects, Arrays, Values (, whitespaces)
- Objects
  - Name: value pairs
- Array
  - List of values

```
{
 "menu":
 {
   "id": "file",
   "value": "File",
   "popup":
    {
     "menuitem": [
                  "New",
                  "Open",
                  "Close"
                  ]
    }
  }
}
```

JSON Object

```
{
    “name":"Franta",
    “surname":"Novák",
    “age":25,
    “alive":false
}
```

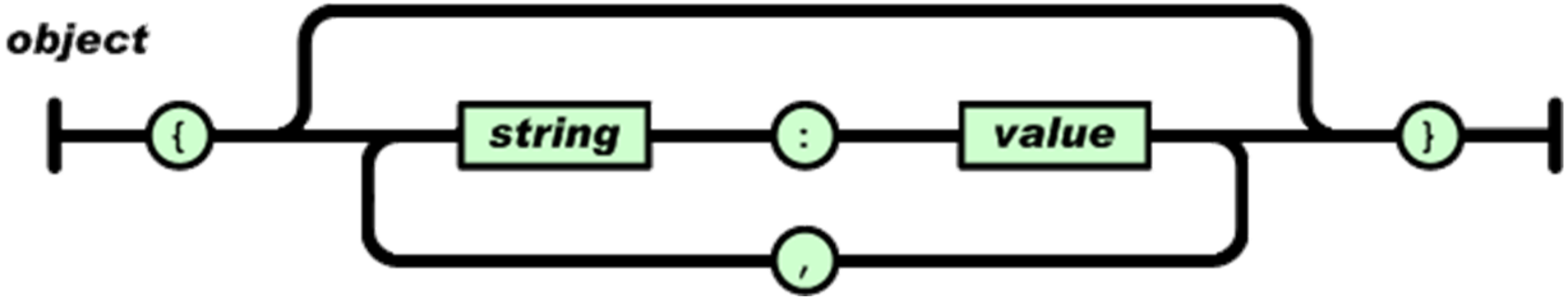

JSON Array

```
[
"New",
"Open",
"Close“
]
```

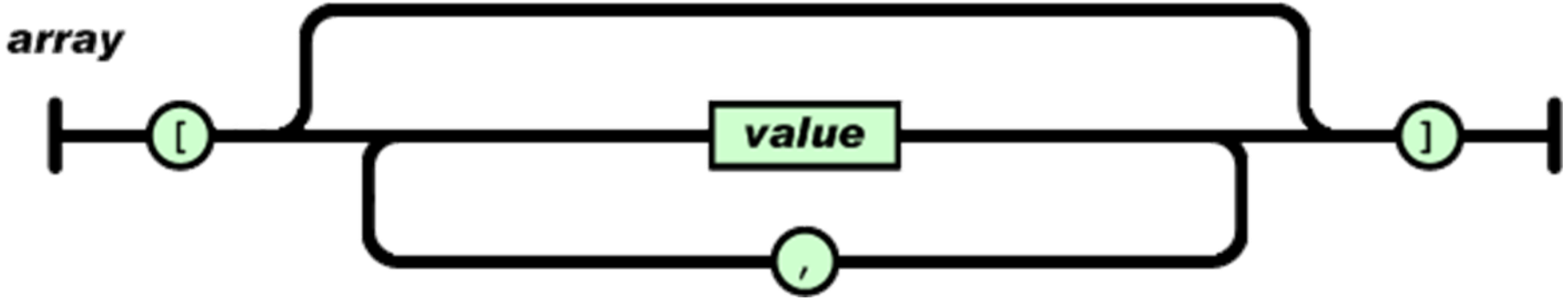

JSON Value

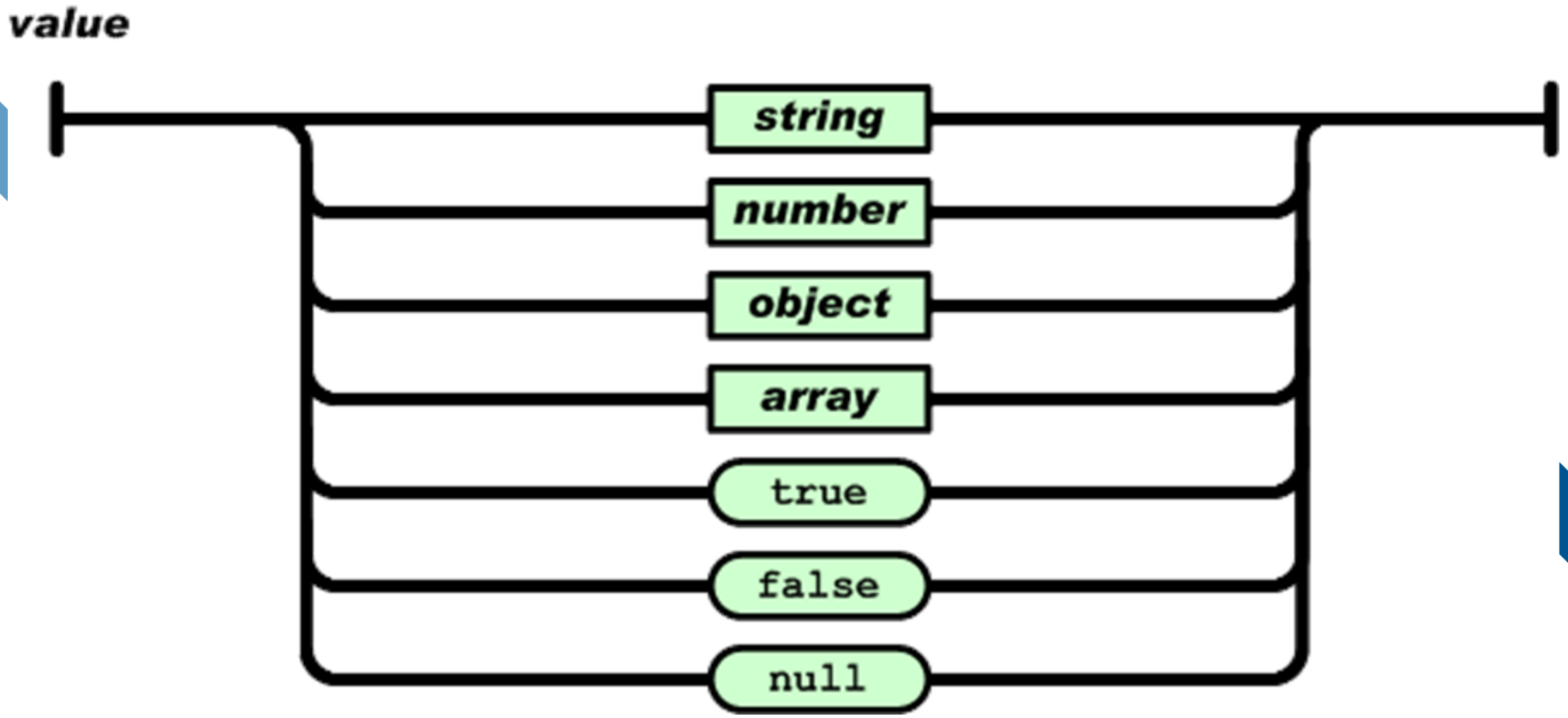

JSON syntax

```
{
 "menu": {
   "id": "file",
   "value": "File",
   "menuitems": [
    "New",
    "Open",
    "Close"
    ]
  }
}
```

```
[
  {
    "jmeno":"Franta",
    "prijmeni":"Novák"
,
    "vek":25,
    "studuje":false
  },
  {
    "jmeno":"Pepa",
    "prijmeni":"Nový",
    …
```

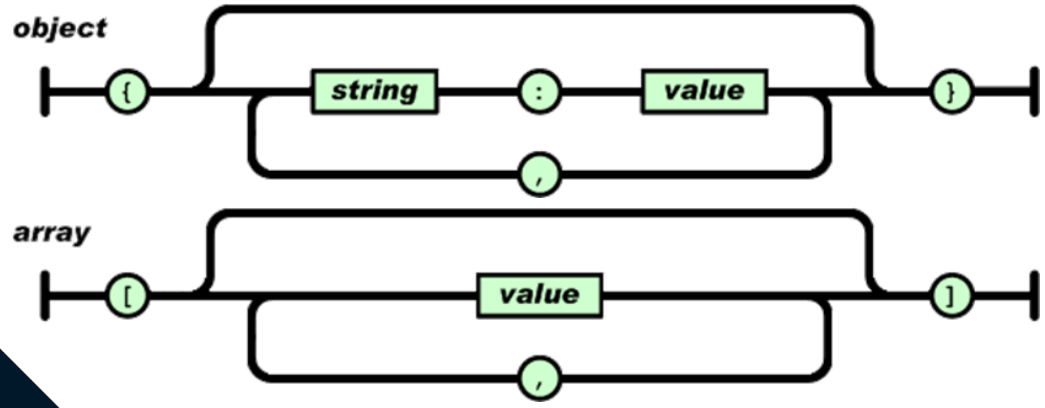

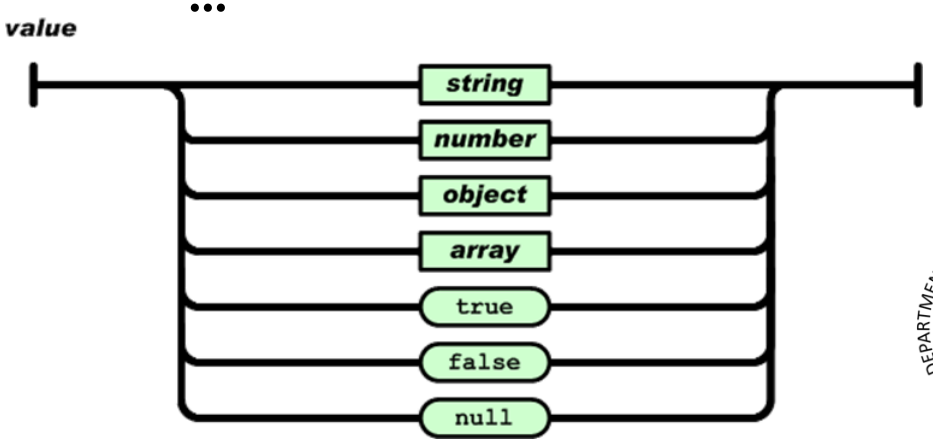

JSON Syntax

- Strings are in quotes
- No comma after the last of the list
- Array can consist of different value types
- JSON consists of **one array**, or **one object**

JSON

- **Lightweight** format
- Easier and faster parsing
- **Modern**

XML

- Data-heavier
- Older
- **Data validation**
  - XML Schema
- Related tools
  - XPath, XSLT, …

Other formats, technologies

- **Markdown, YAML,…**
- TeX
  - Language for publishing and printing
- HTTP, REST, Web services
  - Technologies used to transfer and exchange data
- Other data formats
  - Avro, Parquet,…

Thank you
Time for your questions

?