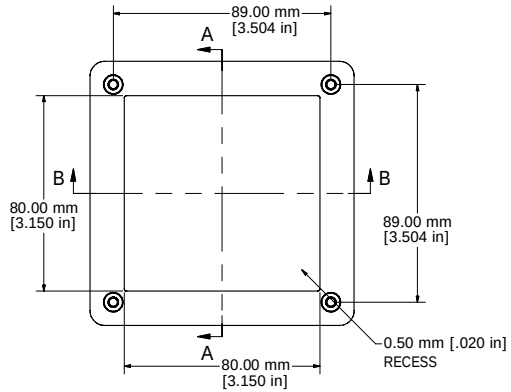

ASSEMBLY - TOP

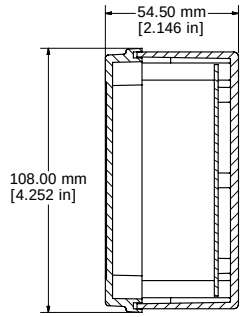

SECTION A-A

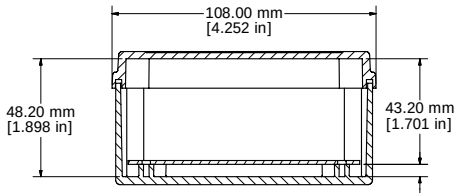

SECTION B-B

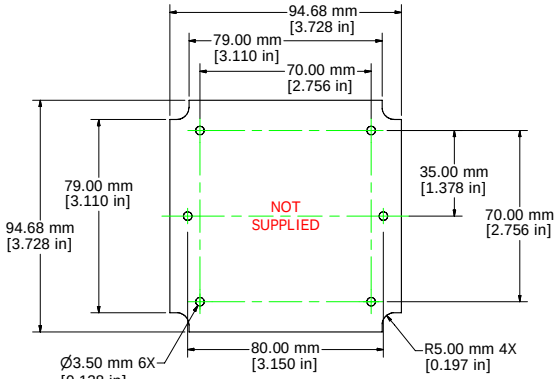

INNER PANEL

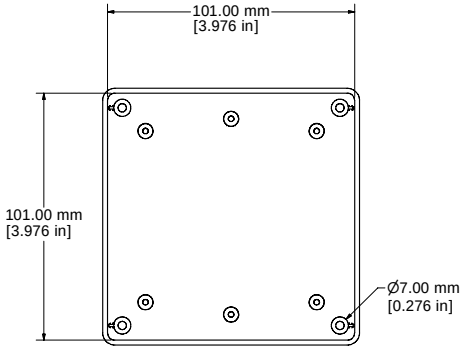

BOX - INSIDE

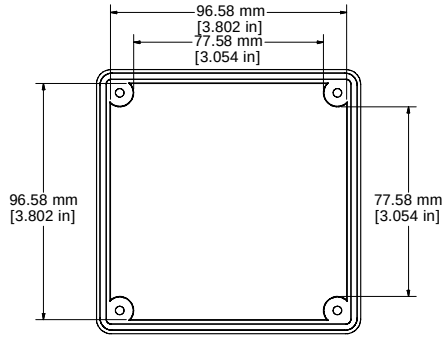

LID - INSIDE

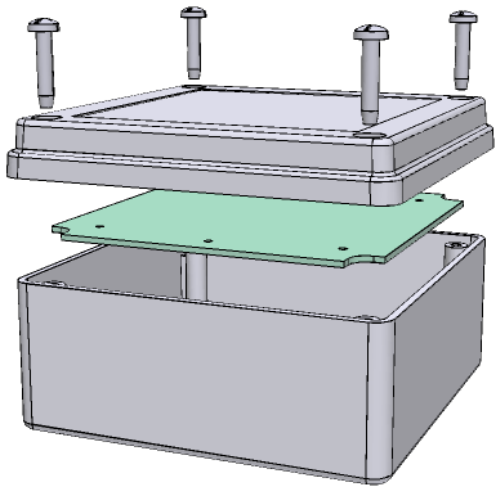

Note:

Enclosures can be Factory Modified (Milling, Drilling, Printing etc.)
Contact Factory mjm@hammondmfg.com for quotes
Solid models of this enclosure available in STEP or IGES Format.

RS5105S
Box Material: ABS (UL94-HB), Light Gray Color
Lid Screws: M4 x 22 self tap, 304 Stainless
Gasket: EDPM Cord.
Circuit Board Screws, 4 Supplied (M3 self tap)
Suggested Lid Screw Torque: 30 ozf-in (21 cN-m)

HAMMOND MANUFACTURING™

RS5105S

www.hammondmfg.com