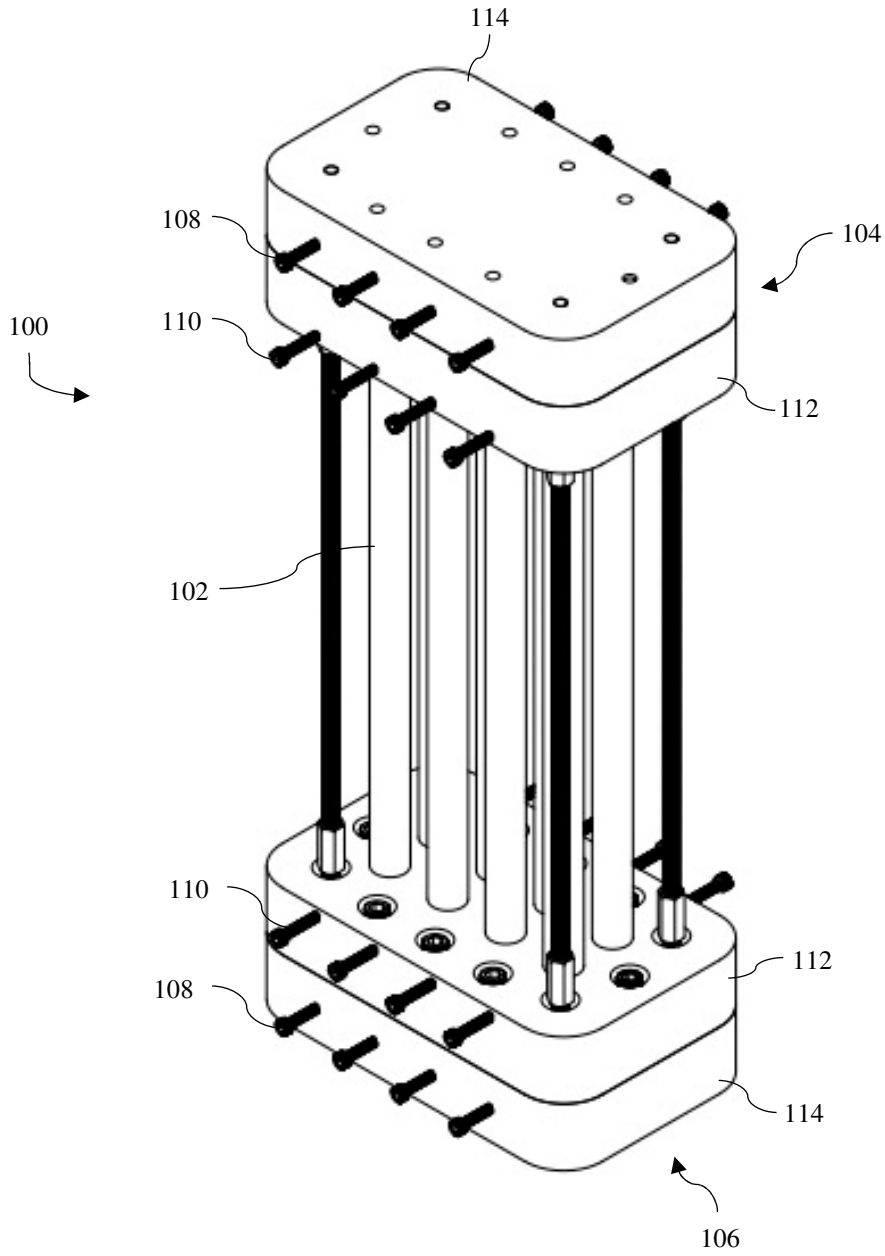

FIG. 1

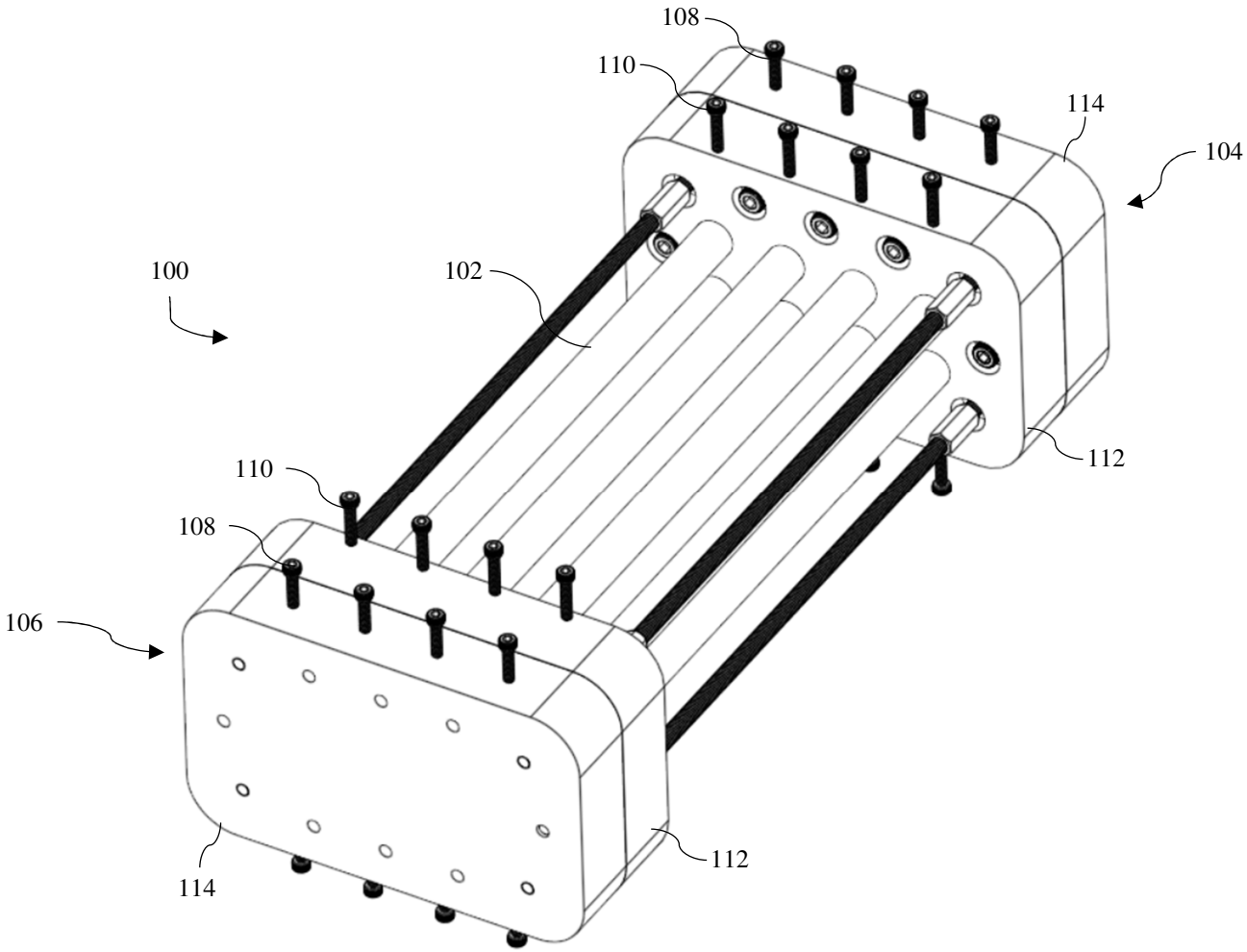

FIG. 1A

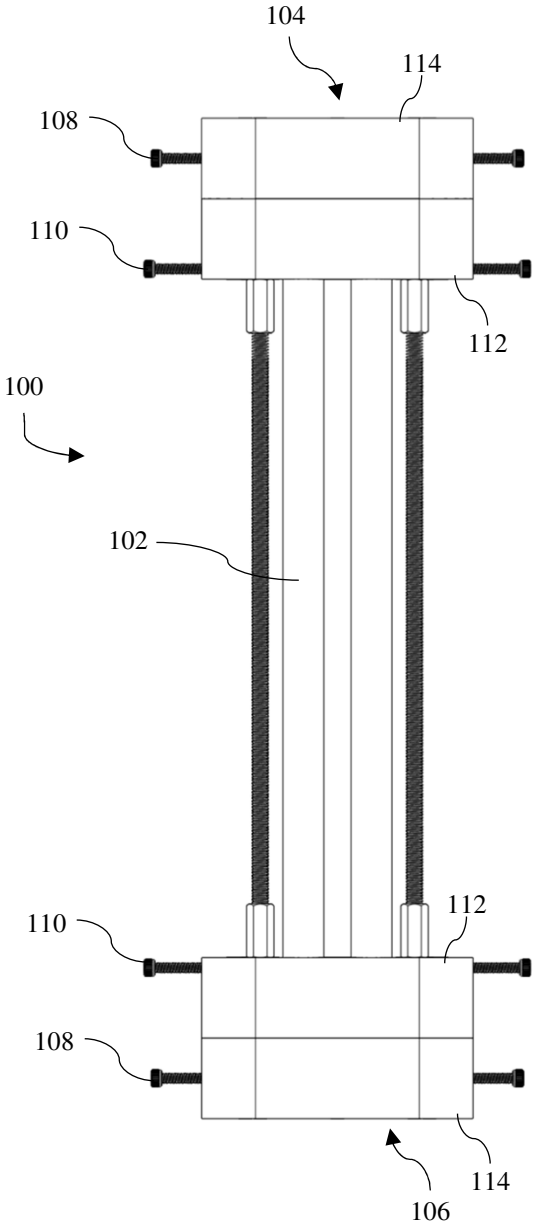
104
114
108
110
112
100
102
110
112
108
114
106

FIG. 1B

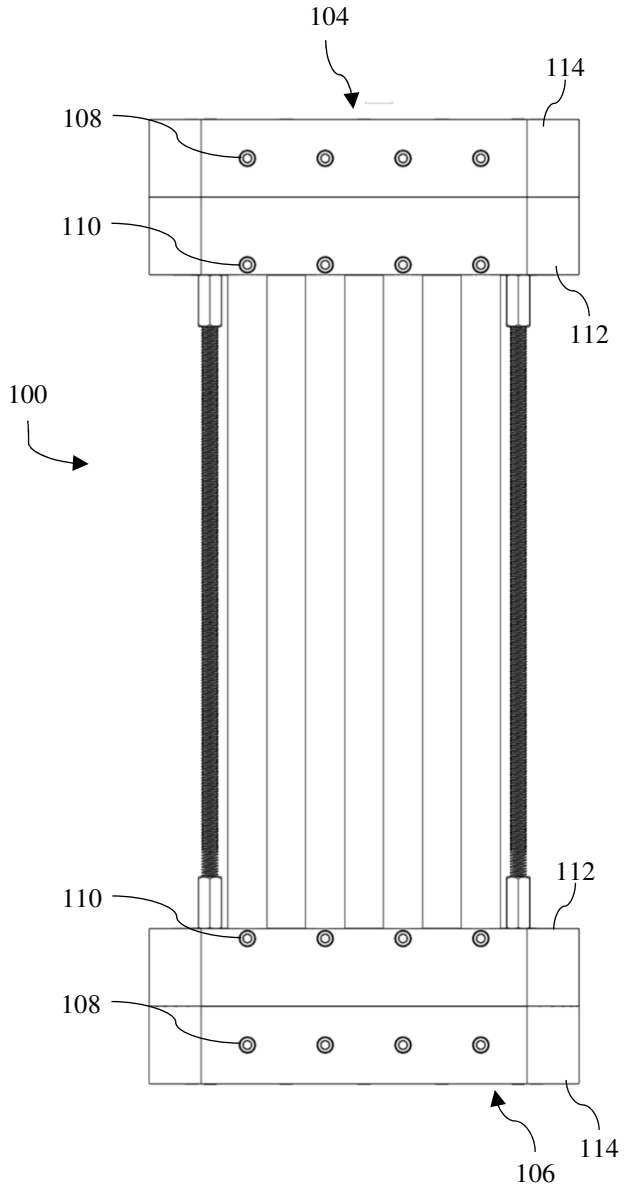
104
114
108
110
112
100
110
112
108
106
114

FIG. 1C

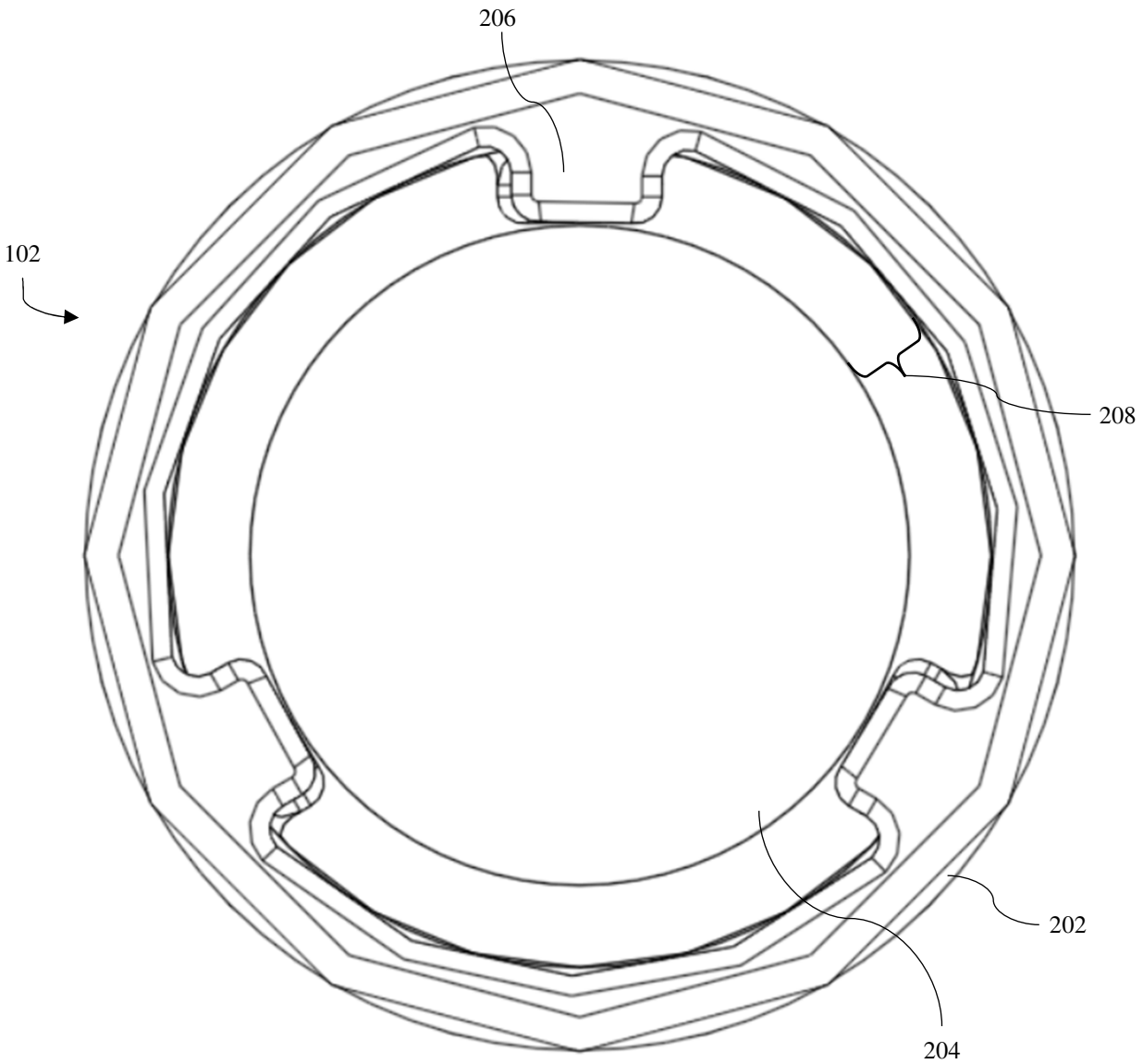

FIG. 2

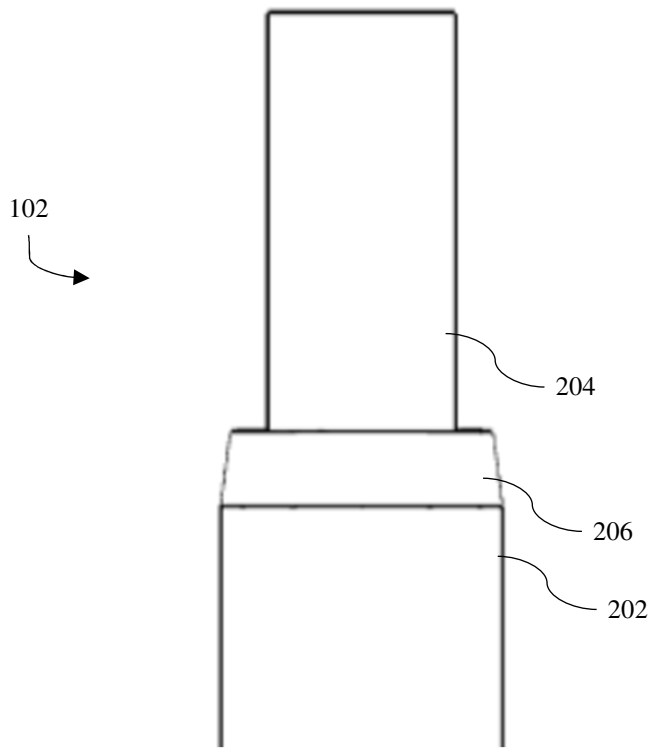

FIG. 2A

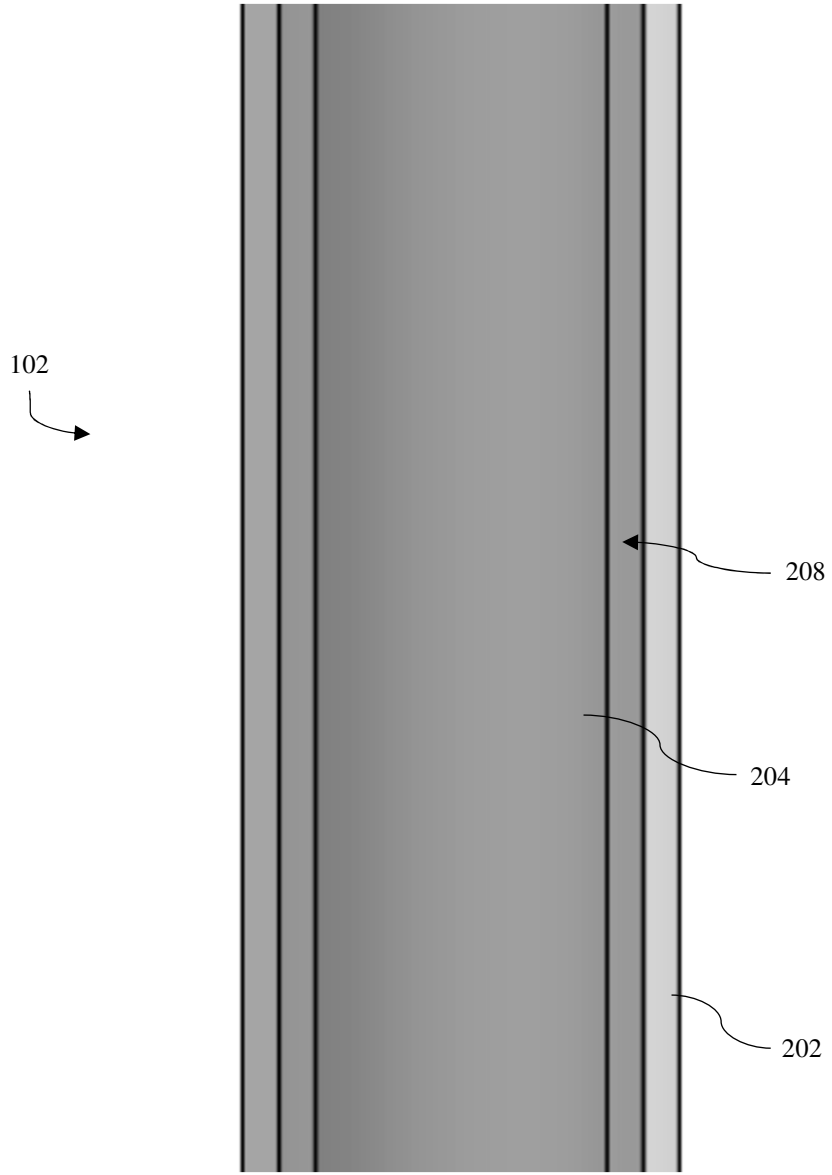

FIG. 2B

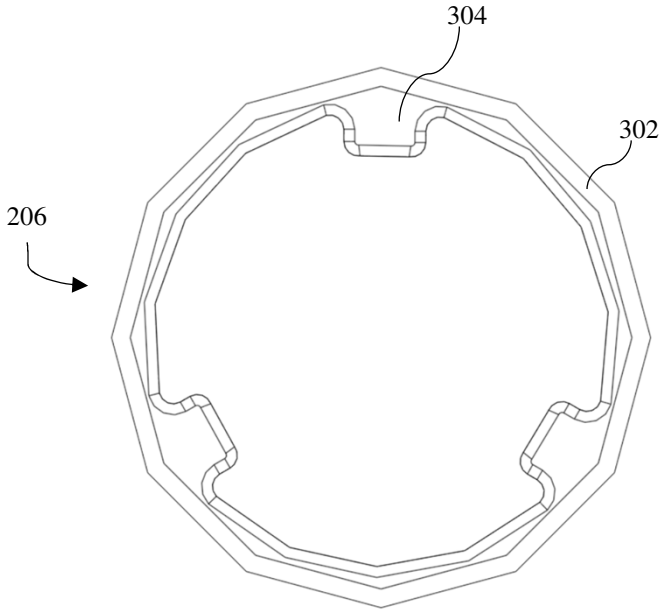

FIG. 3

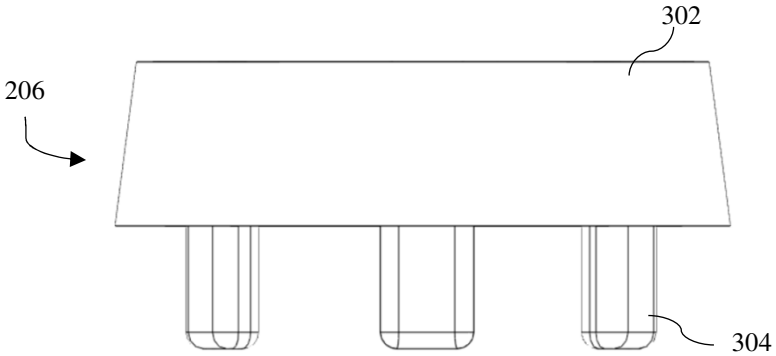

FIG. 3A

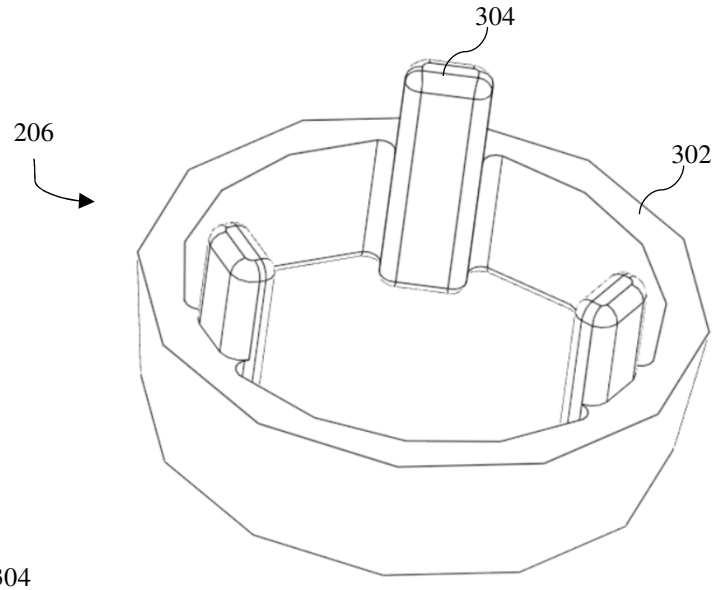

FIG. 3B

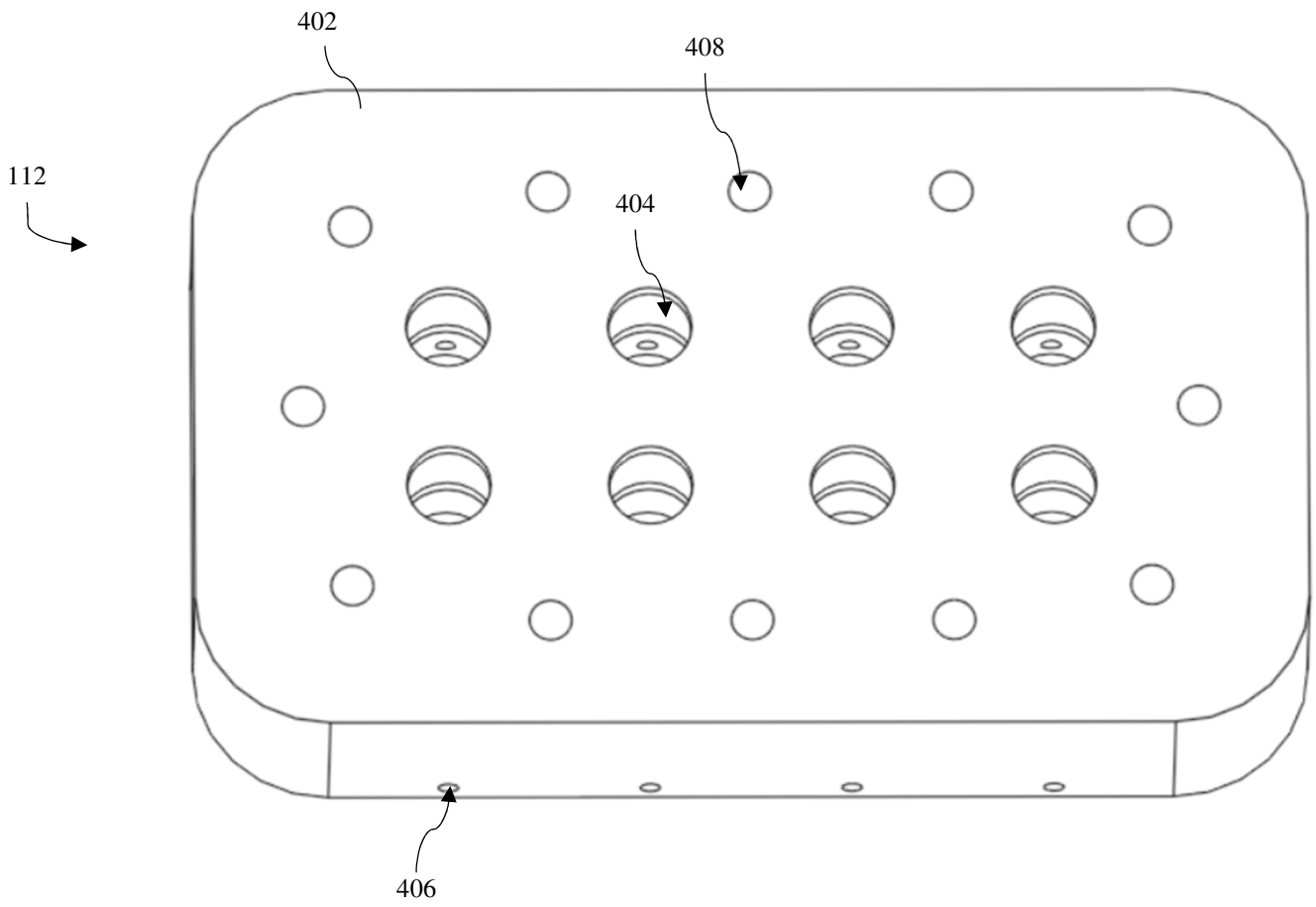

FIG. 4

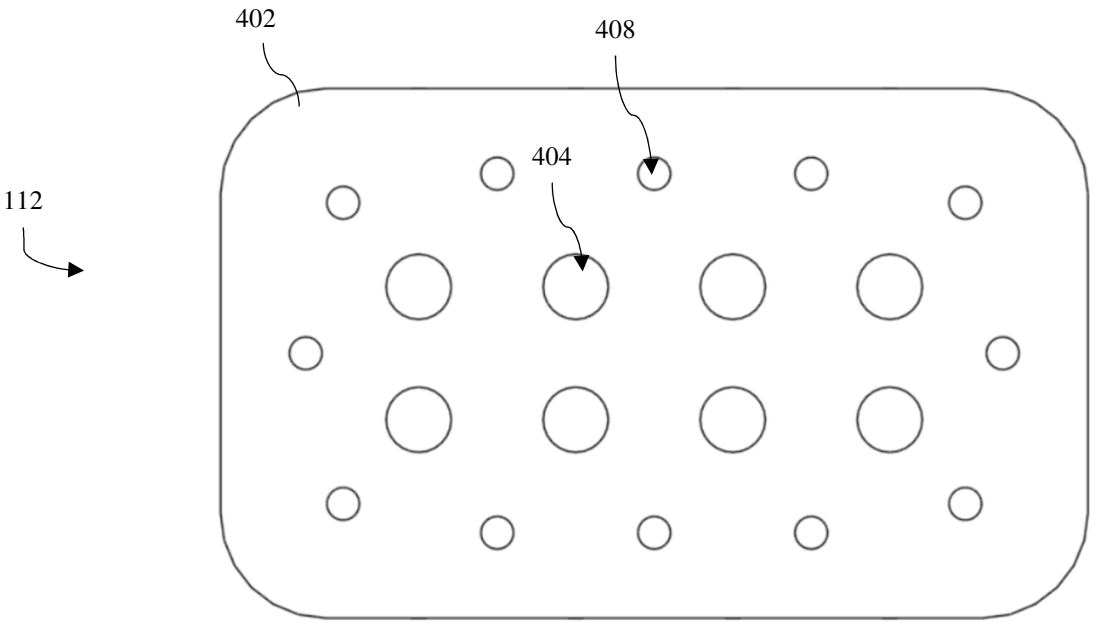

FIG. 4A

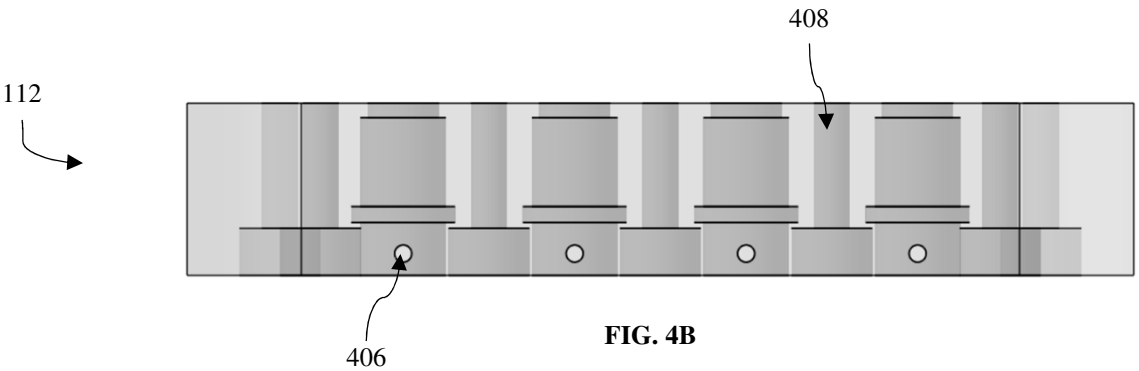

FIG. 4B

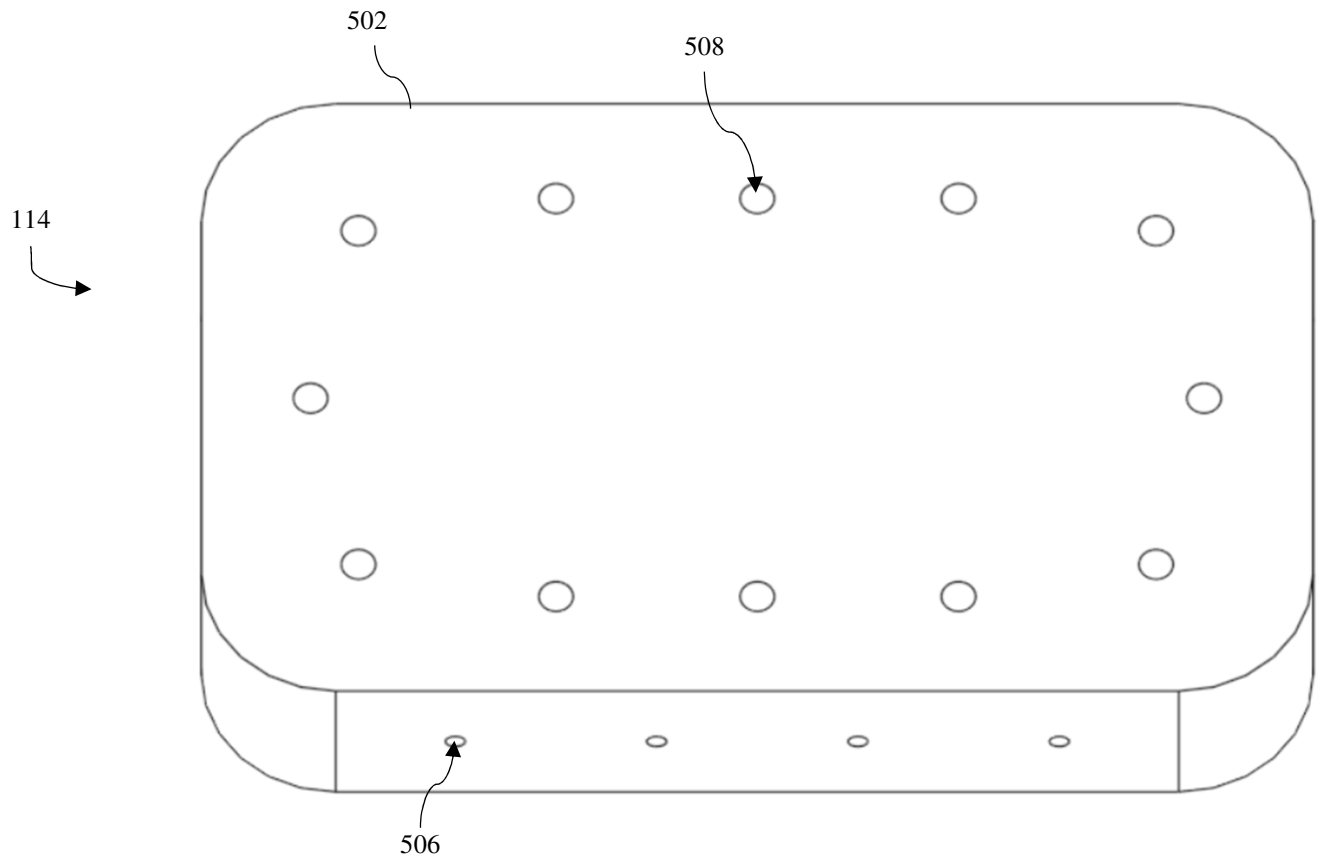

FIG. 5

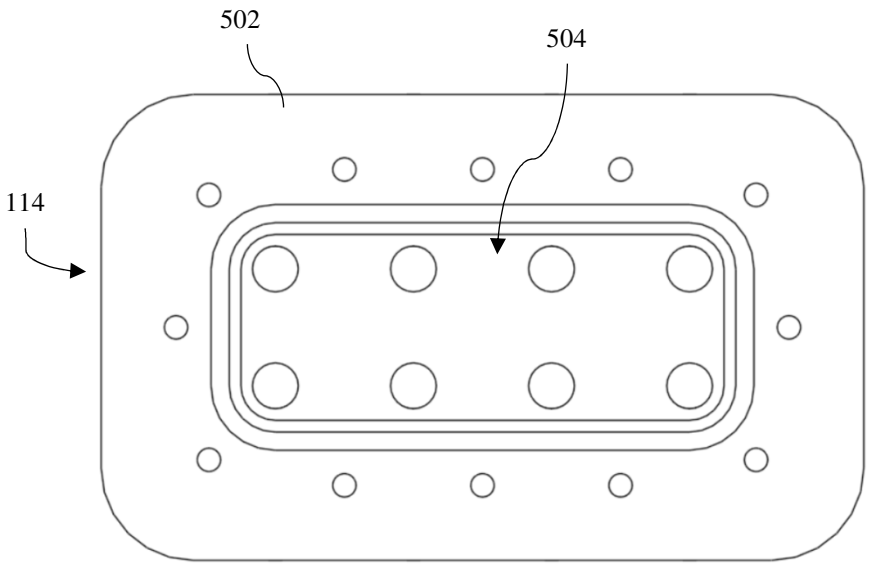

FIG. 5A

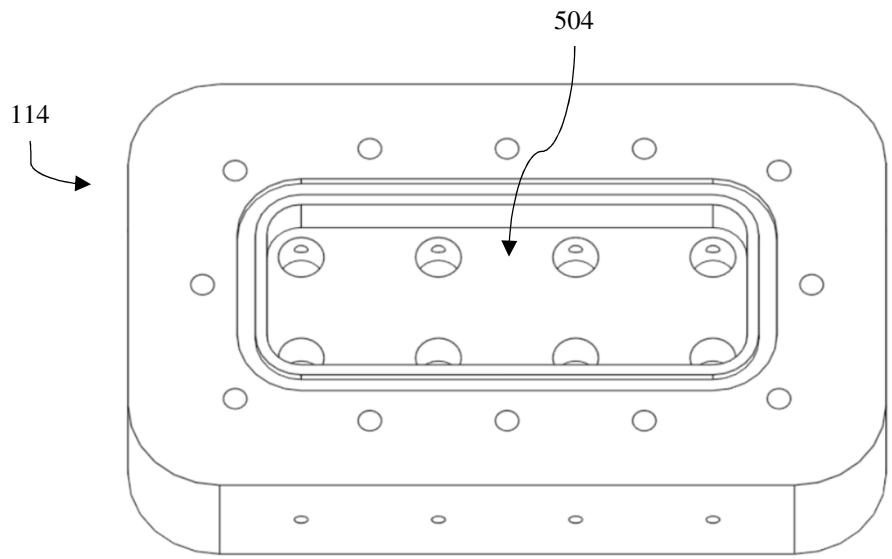

FIG. 5B

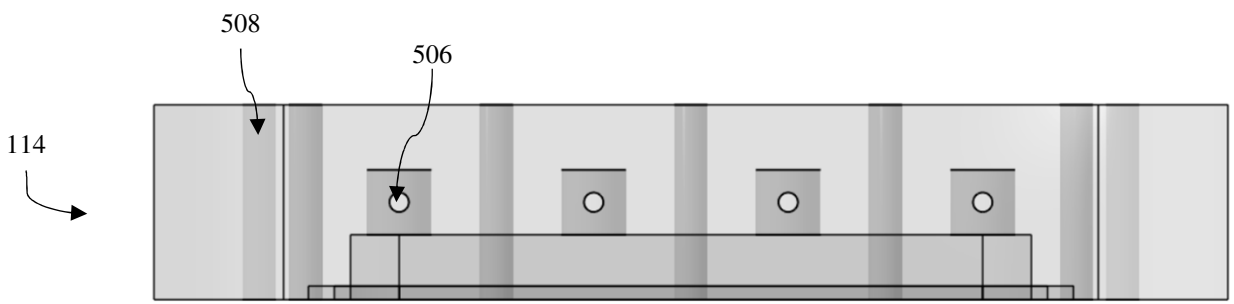

FIG. 5C

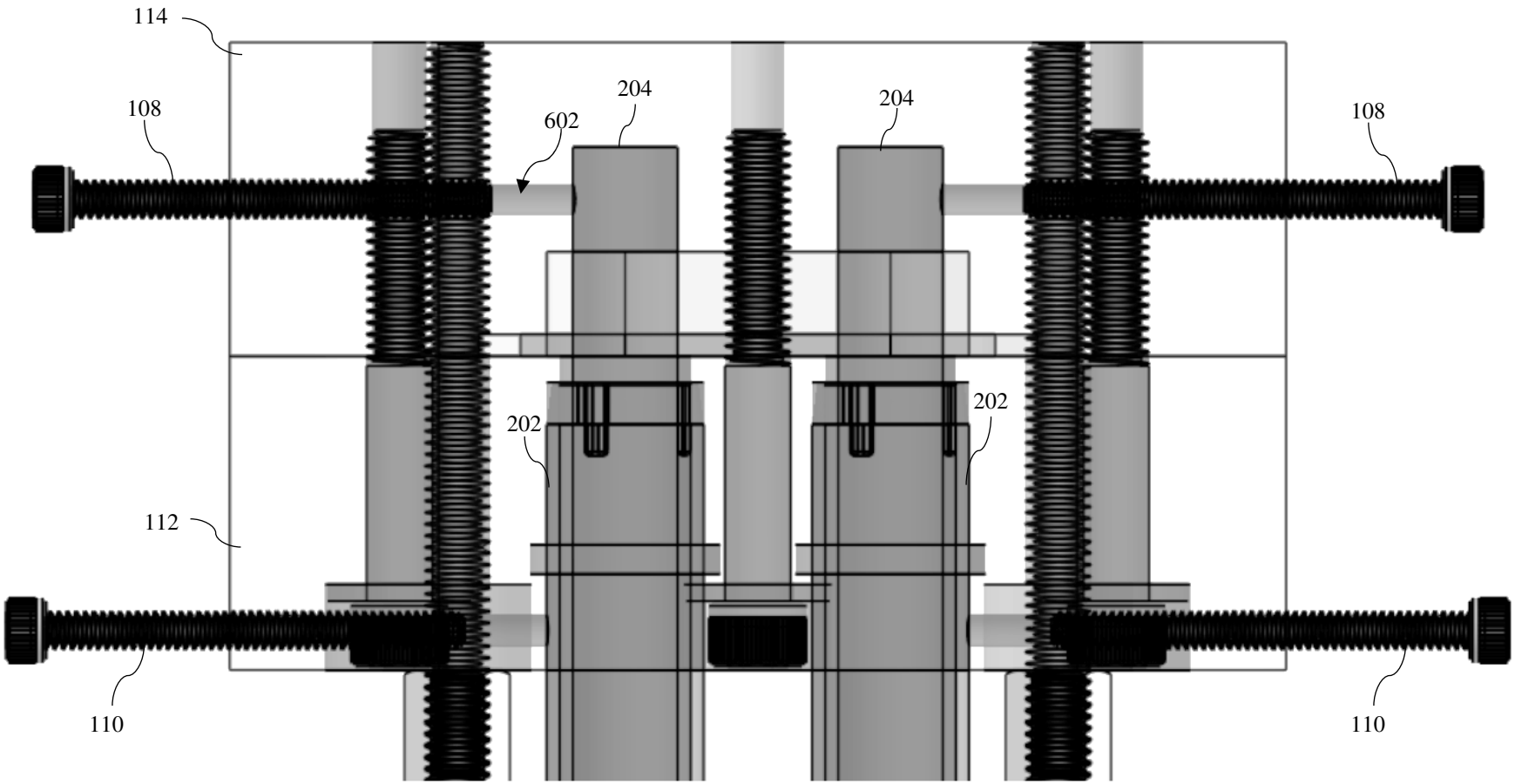

FIG. 6

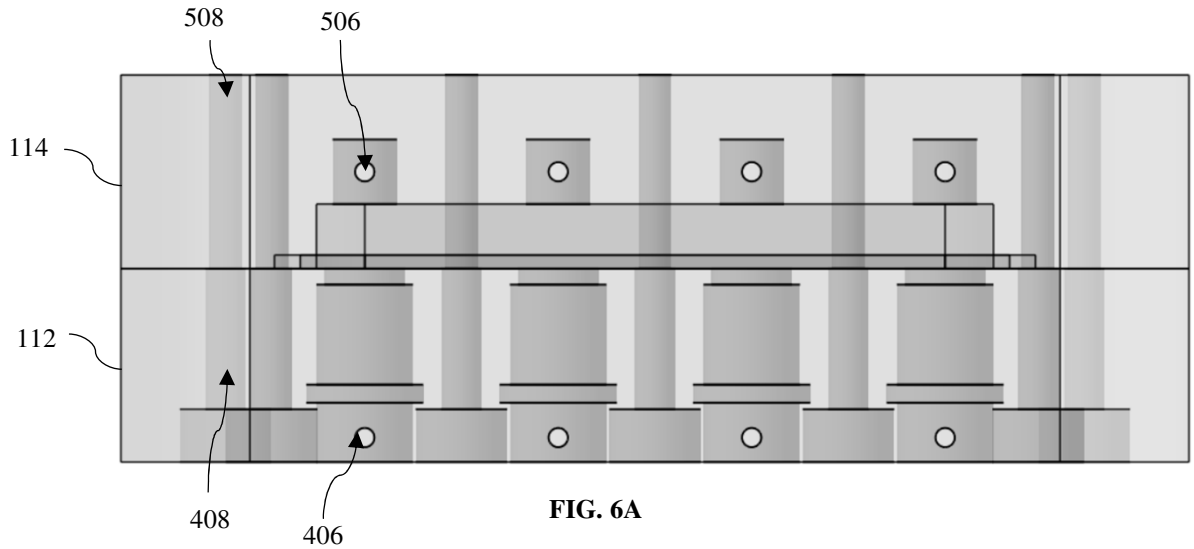

FIG. 6A

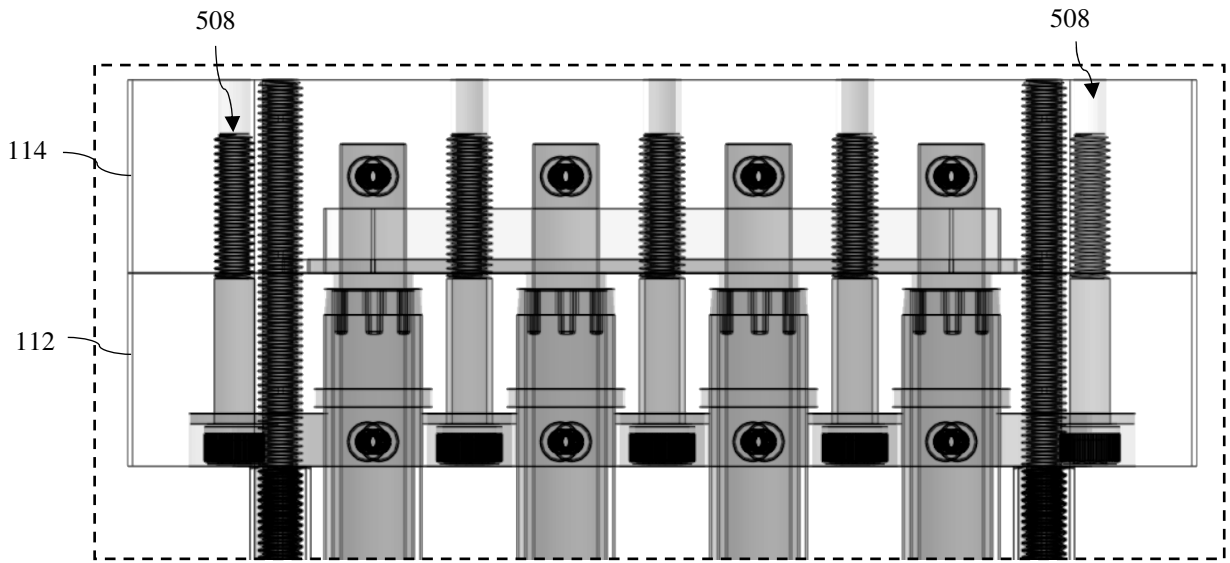

FIG. 6B

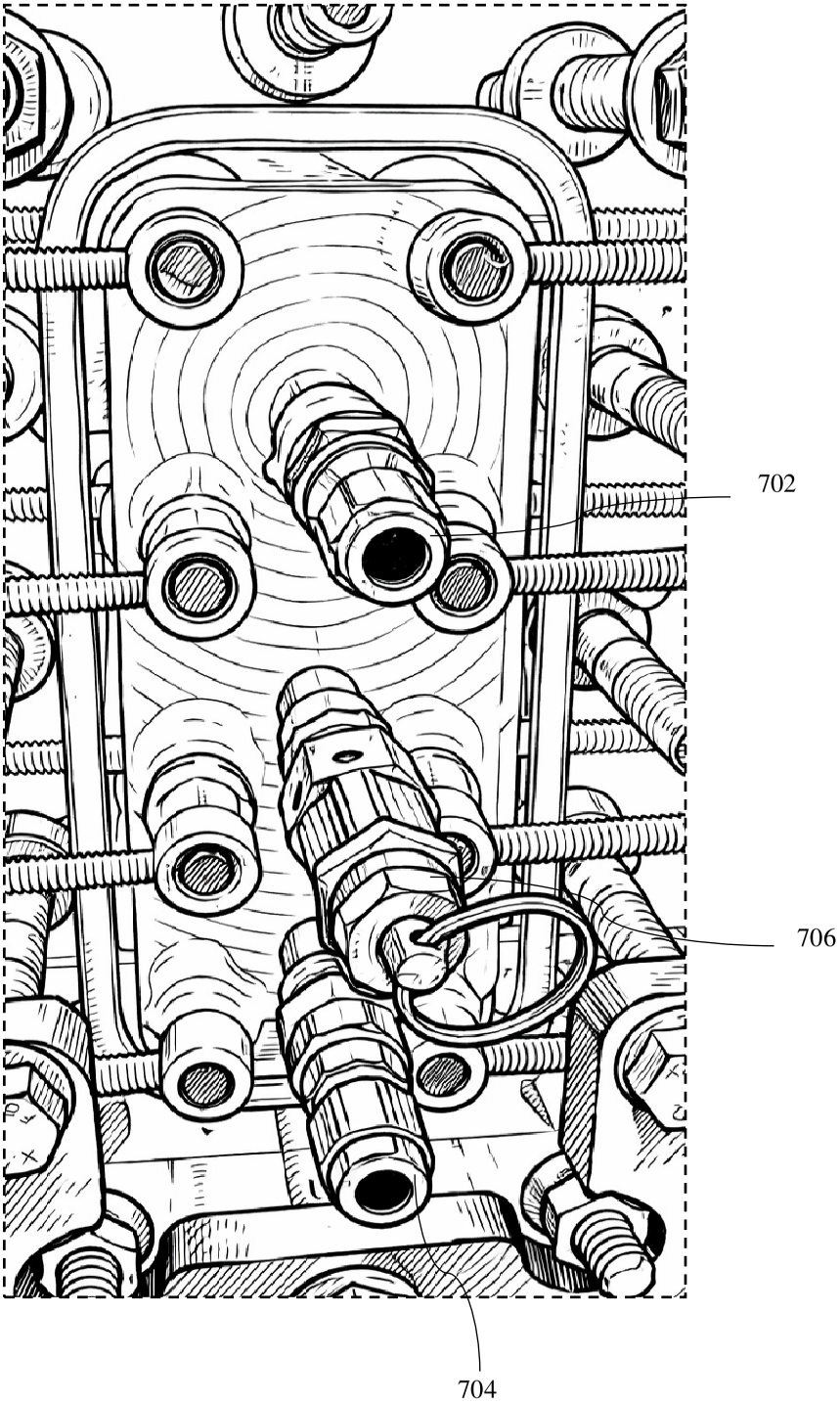

FIG. 7

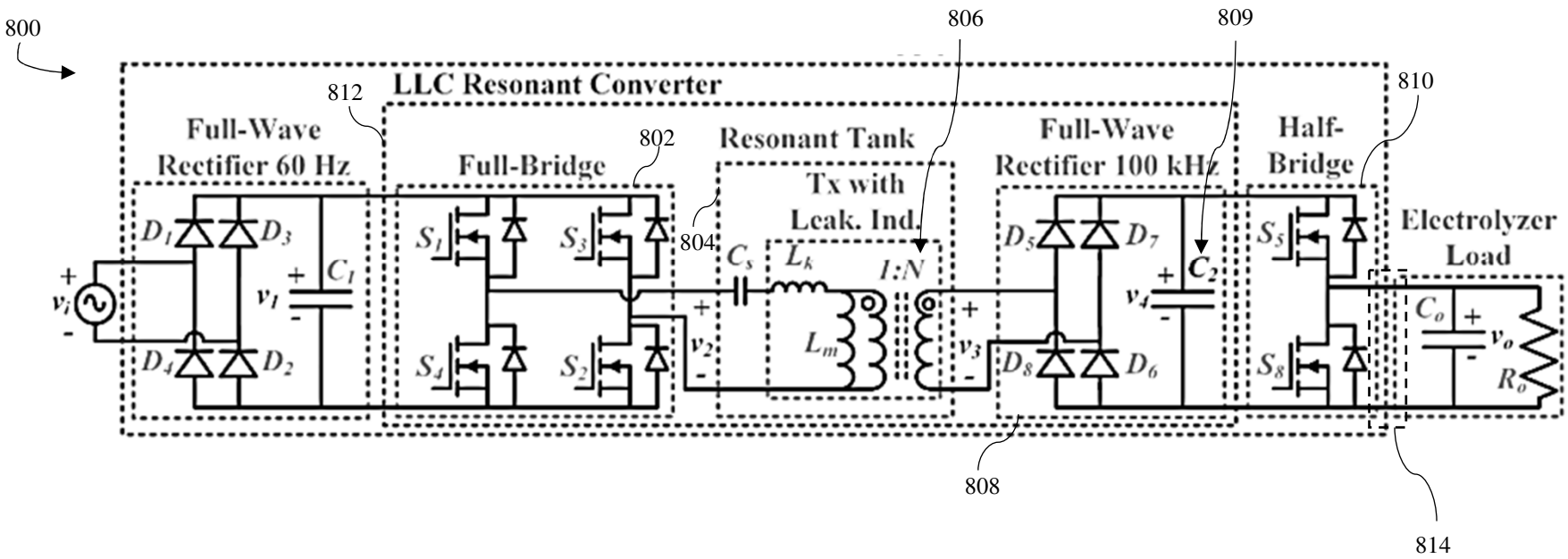
800
806
809
LLC Resonant Converter
812
810
Full-Wave
Rectifier 60 Hz
Full-Bridge
802
Resonant Tank
Tx with
Leak. Ind.
Full-Wave
Rectifier 100 kHz
Half-
Bridge
Electrolyzer
Load
804
D_1
D_3
D_4
D_2
C_1
v_i
v_1
S_1
S_3
S_4
S_2
C_s
L_k
L_m
1:N
v_2
v_3
D_5
D_7
D_8
D_6
C_2
v_4
S_5
S_8
C_o
v_o
R_o
808
814

FIG. 8

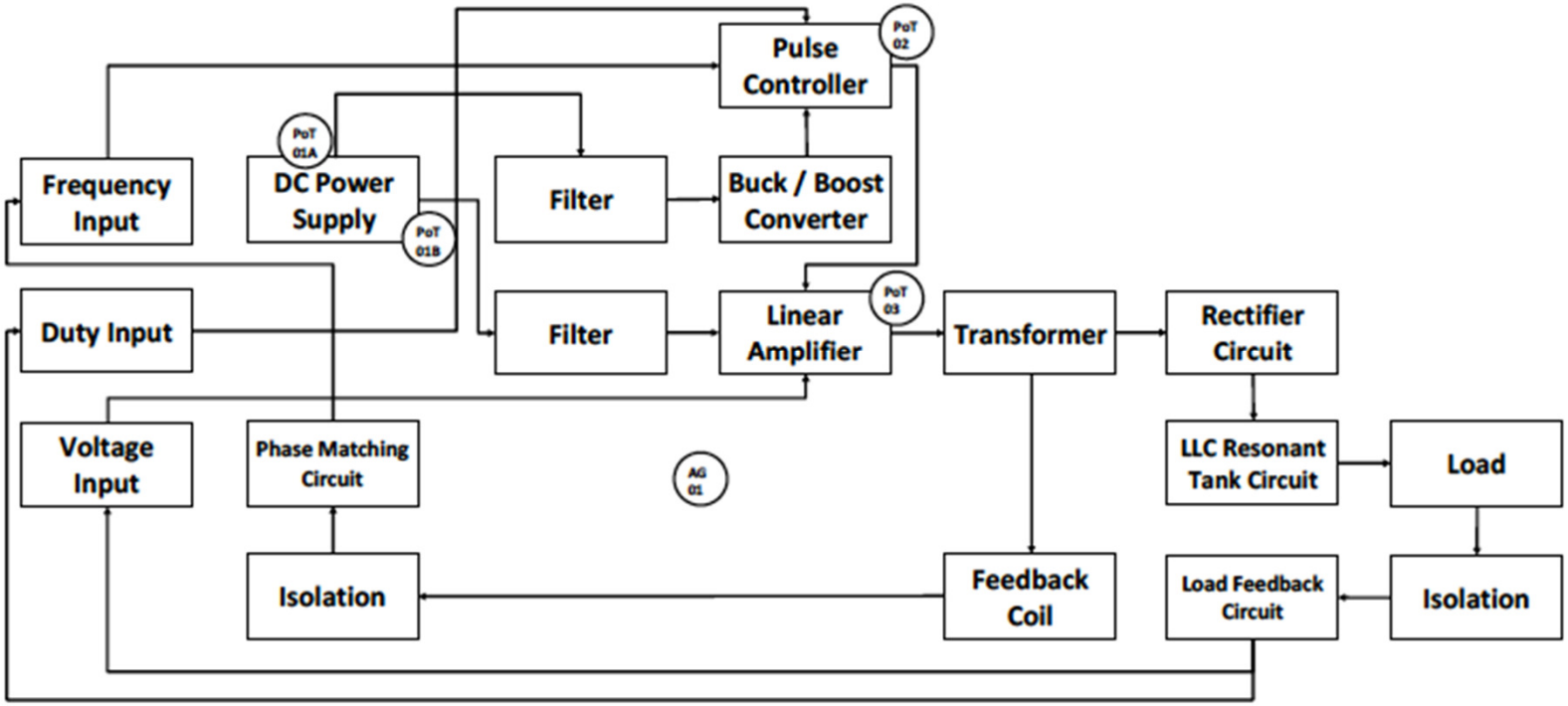
Pulse Controller
PoT 02
PoT 01A
Frequency Input
DC Power Supply
PoT 01B
Filter
Buck / Boost Converter
Duty Input
Filter
Linear Amplifier
PoT 03
Transformer
Rectifier Circuit
Voltage Input
Phase Matching Circuit
AG 01
LLC Resonant Tank Circuit
Load
Isolation
Feedback Coil
Load Feedback Circuit
Isolation

FIG. 9

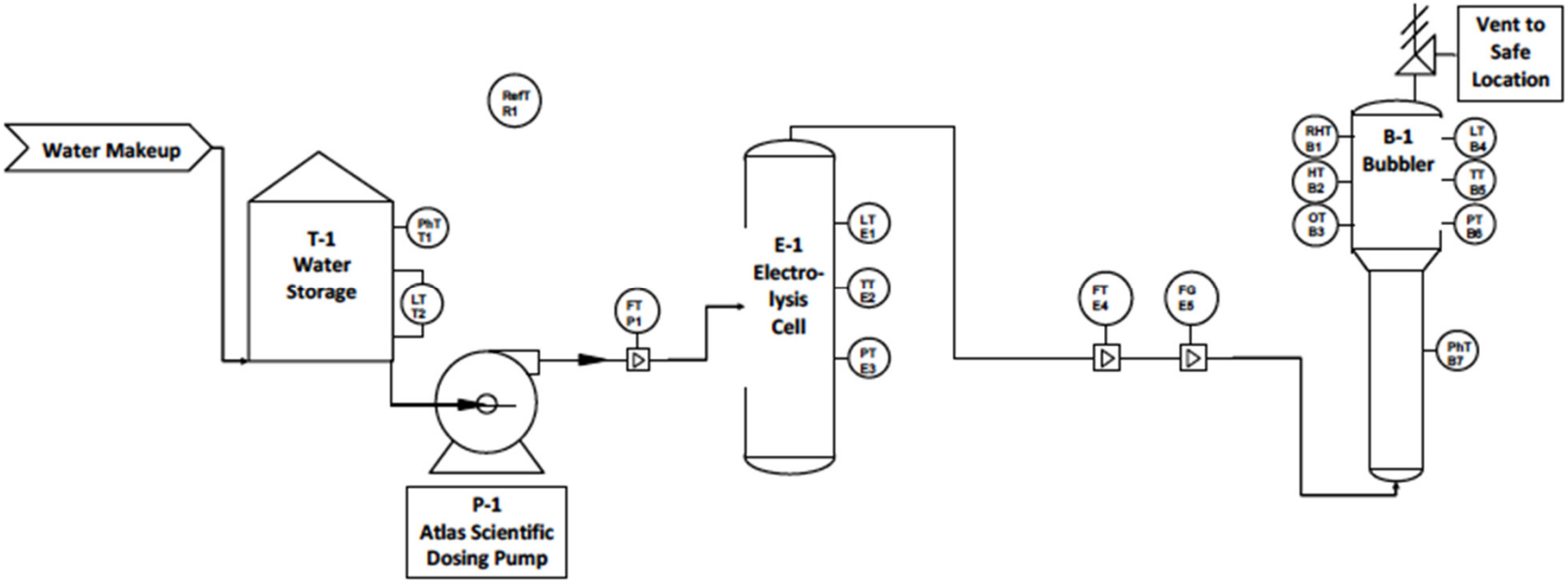
Water Makeup
T-1
Water
Storage
PhT
T1
LT
T2
RefT
R1
P-1
Atlas Scientific
Dosing Pump
FT
P1
E-1
Electro-
lysis
Cell
LT
E1
TT
E2
PT
E3
FT
E4
FG
E5
RHT
B1
HT
B2
OT
B3
B-1
Bubbler
LT
B4
TT
B5
PT
B6
PhT
B7
Vent to
Safe
Location

FIG. 10

Summary of Testing	Total Power Input (Watts)	Test Duration (hours)	Avg. Volumetric Flow Measurement (LPM)	Calc Total Mass Produced during Test	Daily Production Rate (kg/day)	Calc. Eff. (%) LHV
1kW Low TDS	6,012	6	9.8	0.581	2.323	72.37%
1kW High TDS	6,143	6	9.7	0.575	2.299	70.11%
2.5kW Low TDS	14,972	6	24.3	1.440	5.760	72.06%
2.5kW High TDS	5,032	2	23.5	0.464	5.570	69.12%

**from Volumetric Flow Measurement & Density @ 28 C and 15 PSIG (kg)*

FIG. 11

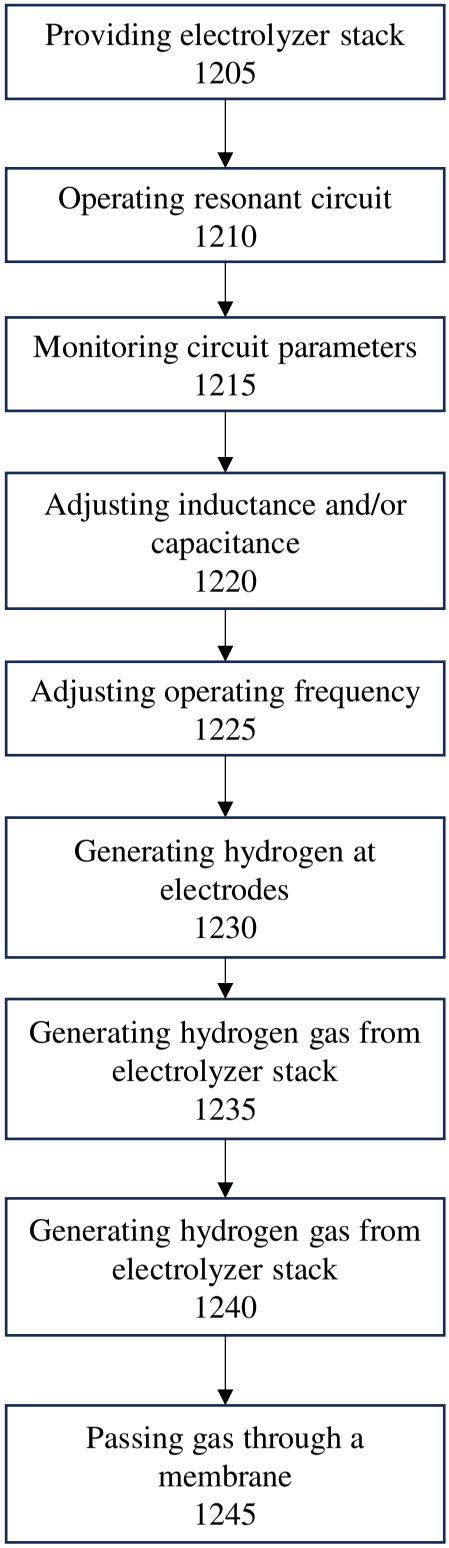
Providing electrolyzer stack
1205
Operating resonant circuit
1210
Monitoring circuit parameters
1215
Adjusting inductance and/or capacitance
1220
Adjusting operating frequency
1225
Generating hydrogen at electrodes
1230
Generating hydrogen gas from electrolyzer stack
1235
Generating hydrogen gas from electrolyzer stack
1240
Passing gas through a membrane
1245

FIG. 12

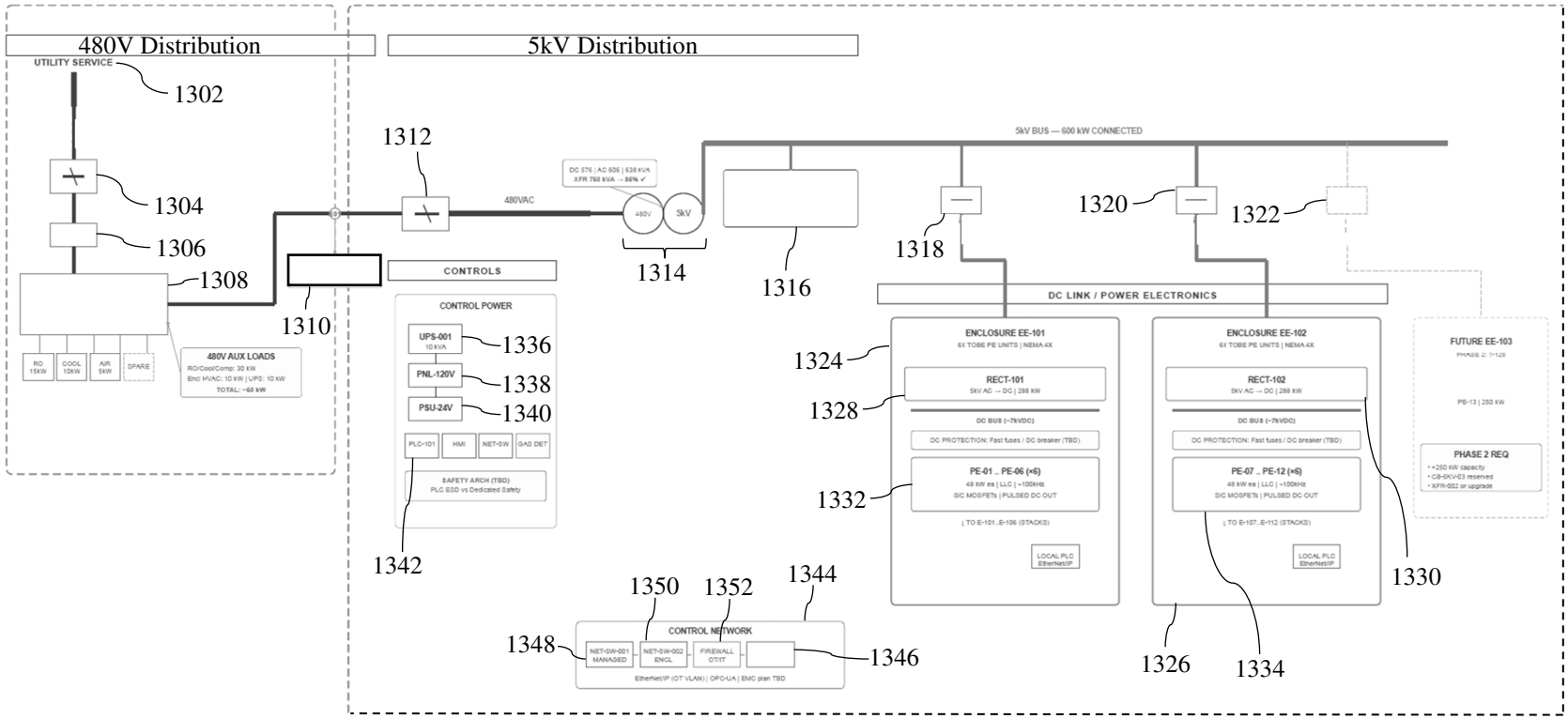
480V Distribution
5kV Distribution
UTILITY SERVICE
1302
1304
1306
1308
1310
1312
1314
1316
1318
1320
1322
1324
1328
1330
1332
1334
1336
1338
1340
1342
1344
1346
1348
1350
1352
5kV BUS — 600 kW CONNECTED
DC 576 | AC 526 | 538 kVA
XFR 750 kVA → 86% ✓
480VAC
480V
5kV
CONTROLS
CONTROL POWER
UPS-001
10 kVA
PNL-120V
PSU-24V
PLC-101
HMI
NET-SW
GAS DET
SAFETY ARCH (TBD)
PLC ESD vs Dedicated Safety
RO
15kW
COOL
10kW
AIR
5kW
SPARE
480V AUX LOADS
RO/Cool/Comp: 30 kW
Encl HVAC: 10 kW | UPS: 10 kW
TOTAL: ~60 kW
DC LINK / POWER ELECTRONICS
ENCLOSURE EE-101
6X TOBE PE UNITS | NEMA 4X
RECT-101
5kV AC → DC | 288 kW
DC BUS (~7kVDC)
DC PROTECTION: Fast fuses / DC breaker (TBD)
PE-01 .. PE-06 (×6)
48 kW ea | LLC | ~100kHz
SIC MOSFETs | PULSED DC OUT
↓ TO E-101..E-106 (STACKS)
LOCAL PLC
EtherNetIP
ENCLOSURE EE-102
6X TOBE PE UNITS | NEMA 4X
RECT-102
5kV AC → DC | 288 kW
DC BUS (~7kVDC)
DC PROTECTION: Fast fuses / DC breaker (TBD)
PE-07 .. PE-12 (×6)
48 kW ea | LLC | ~100kHz
SIC MOSFETs | PULSED DC OUT
↓ TO E-107..E-112 (STACKS)
LOCAL PLC
EtherNetIP
FUTURE EE-103
PHASE 2: T-125
PE-13 | 250 kW
PHASE 2 REQ
• +250 kW capacity
• CB-5KV-03 reserved
• XFR-002 or upgrade
CONTROL NETWORK
NET-SW-001
MANAGED
NET-SW-002
ENCL
FIREWALL
OT/IT
EtherNetIP (OT VLAN) | OPC-UA | EMC plan TBD

FIG. 13

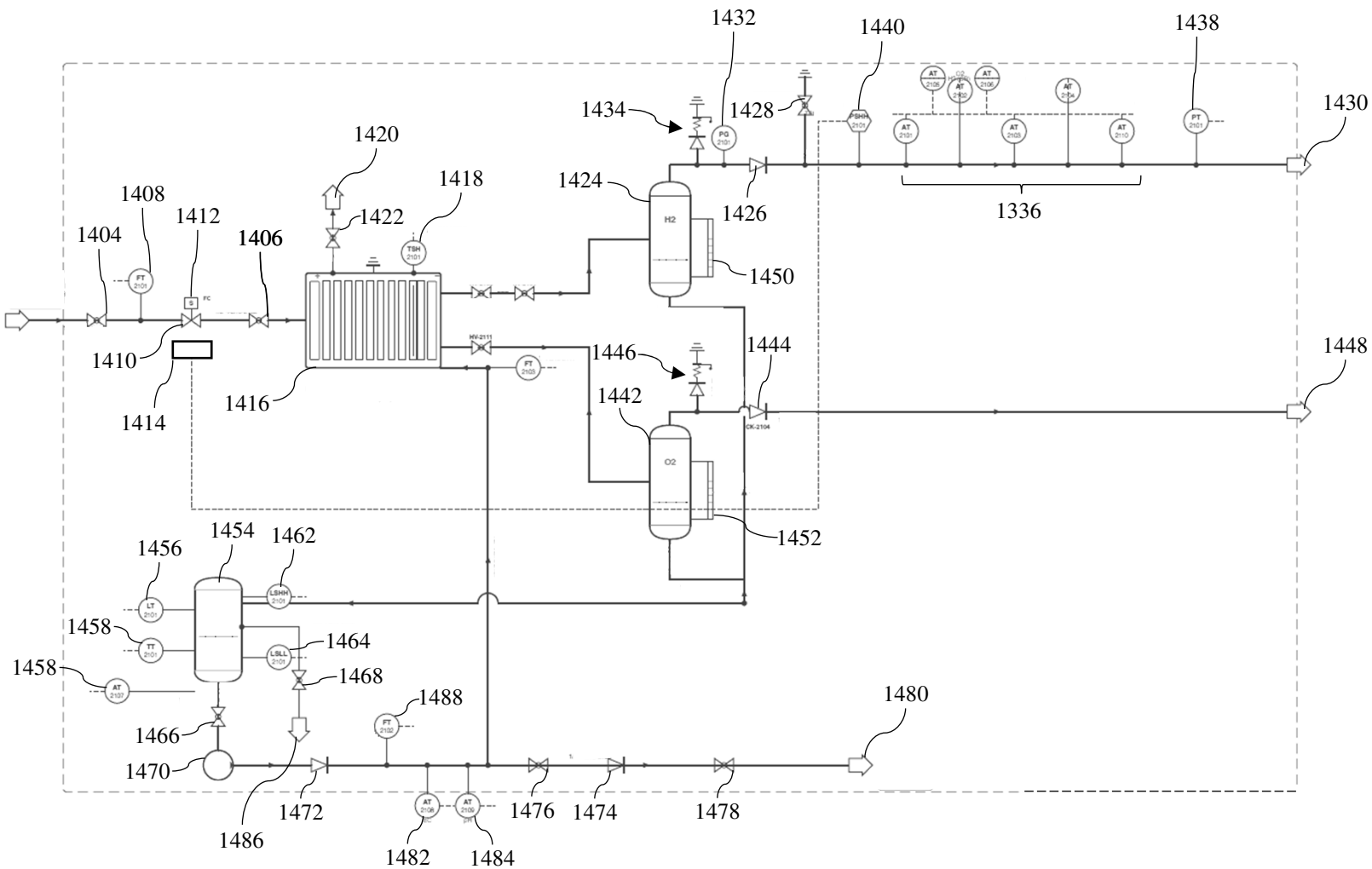
1432
1440
1438
1434
1428
1430
1420
1418
1424
1426
1336
1408
1412
1422
1404
1406
1450
1410
1446
1444
1448
1414
1416
1442
1452
1456
1454
1462
1458
1464
1458
1468
1488
1480
1466
1470
1472
1476
1474
1478
1486
1482
1484

FIG. 14