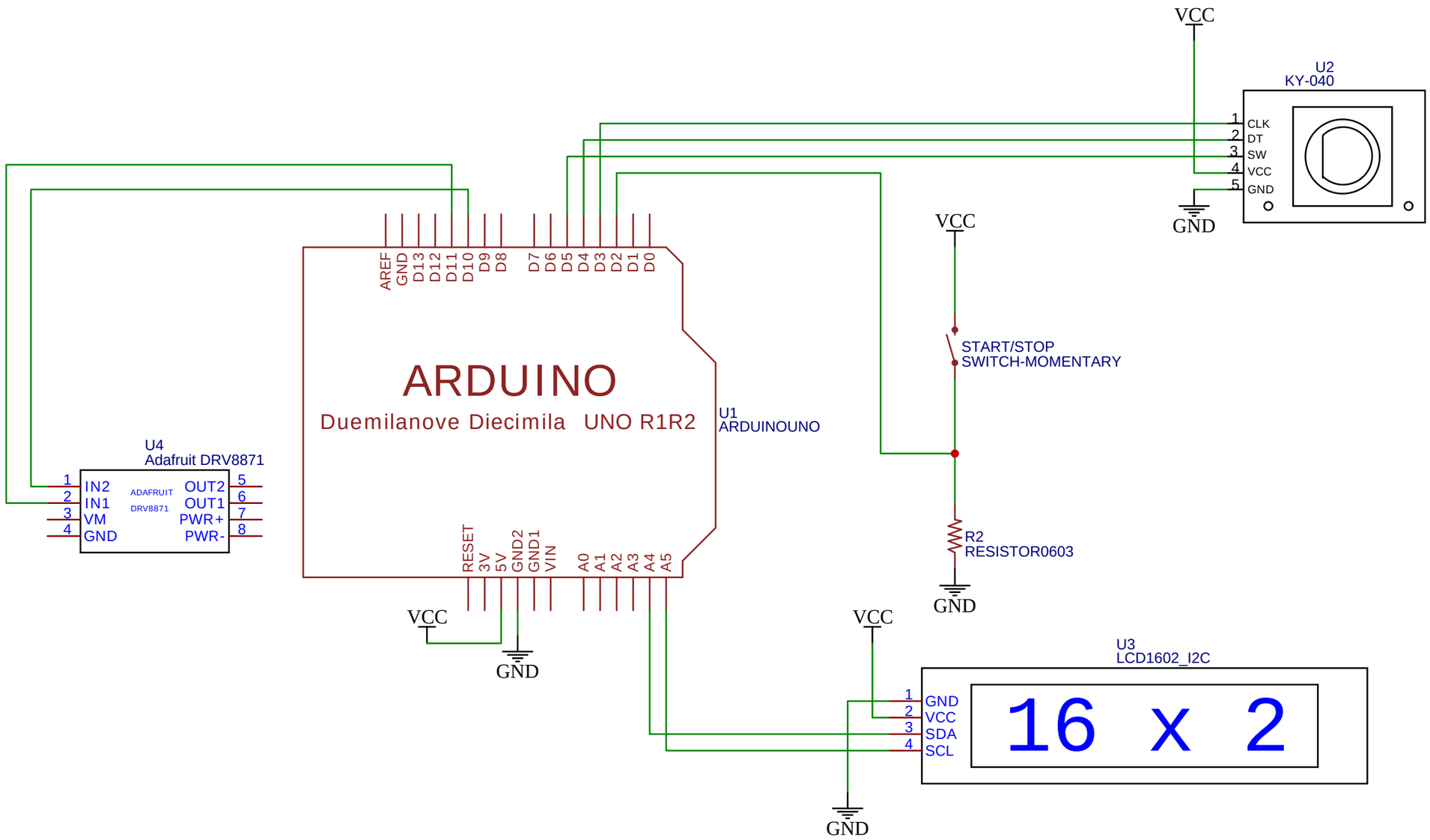

TITLE: Sheet_1	REV: 1.0
Company: Your Company	Sheet: 1/1
Date: 2020-12-02 Drawn By: Ellie Zhou	

EasyEDA