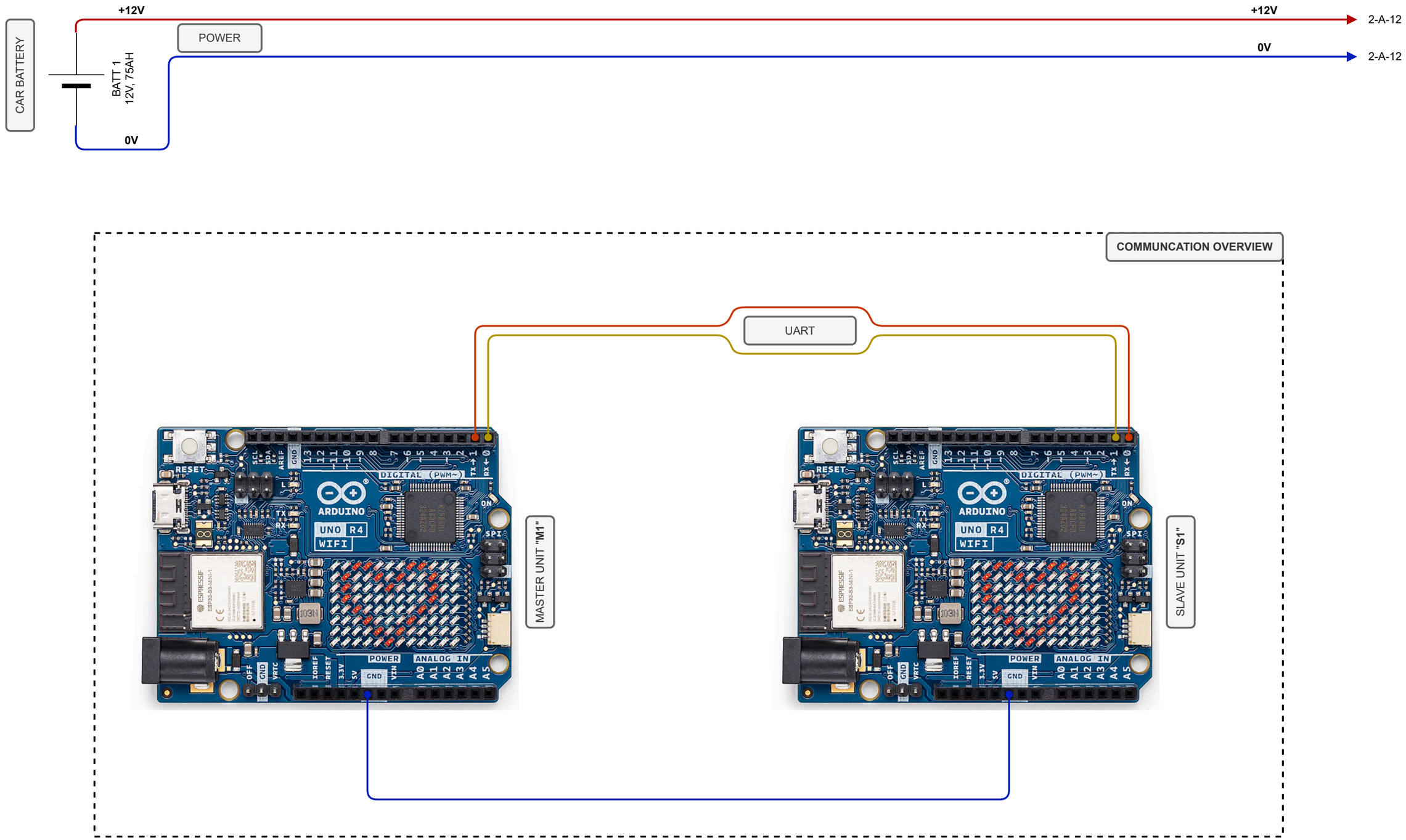

Rev.	Date	Reason for issue	MADE BY
A	19.04.25	Inital drawing	HHS

TITLE: SEMESTER PROSJEKT - KOBLINGSSKJEMA

Rogaland fylkeskommune

SHEET NO. 1 of 5

DRAWING NO. 2025-04-0001

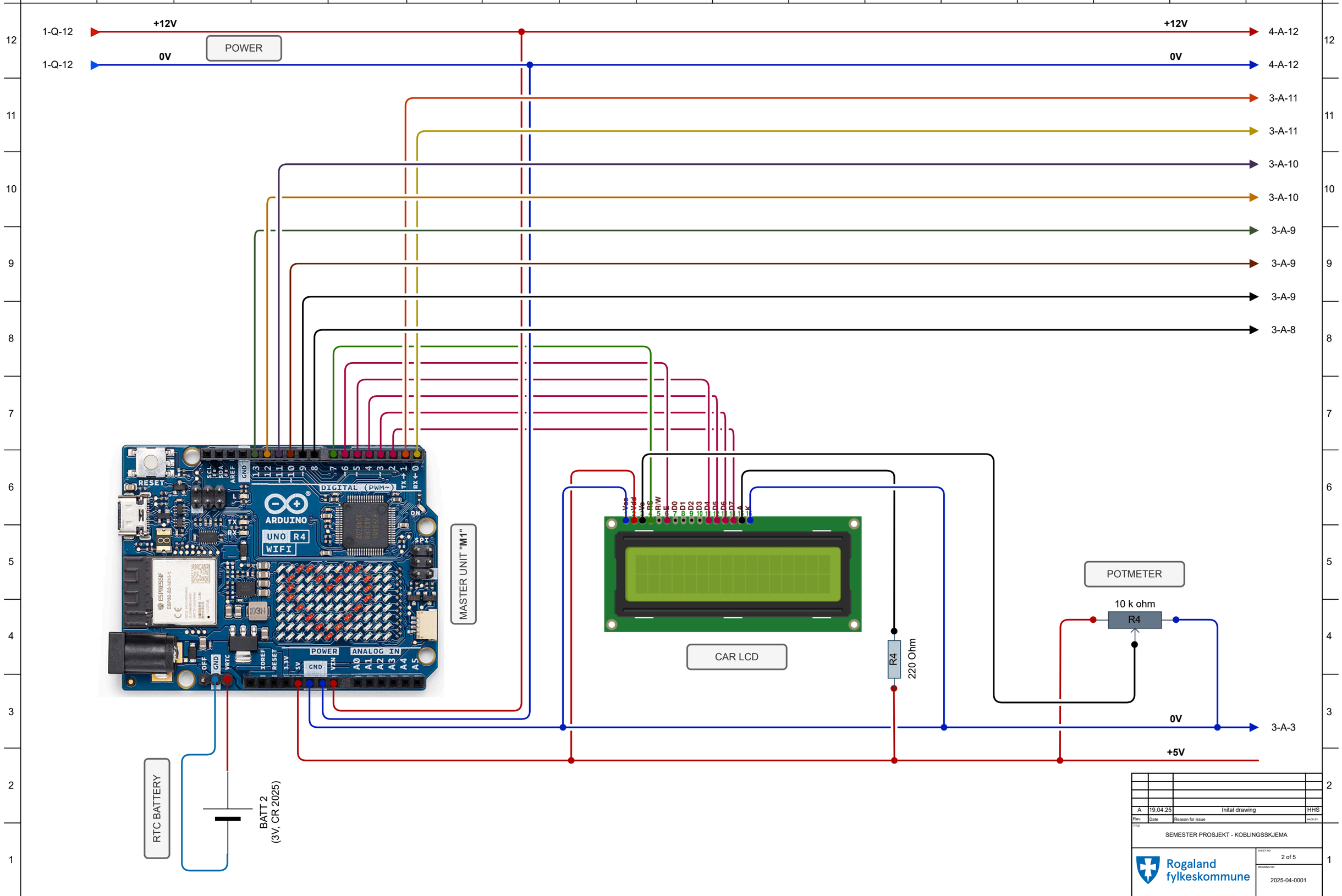

Rev.	Date	Reason for issue	MADE BY
A	19.04.25	Inital drawing	HHS

TITLE: SEMESTER PROSJEKT - KOBLINGSSKJEMA

Rogaland fylkeskommune

SHEET NO. 2 of 5

DRAWING NO. 2025-04-0001

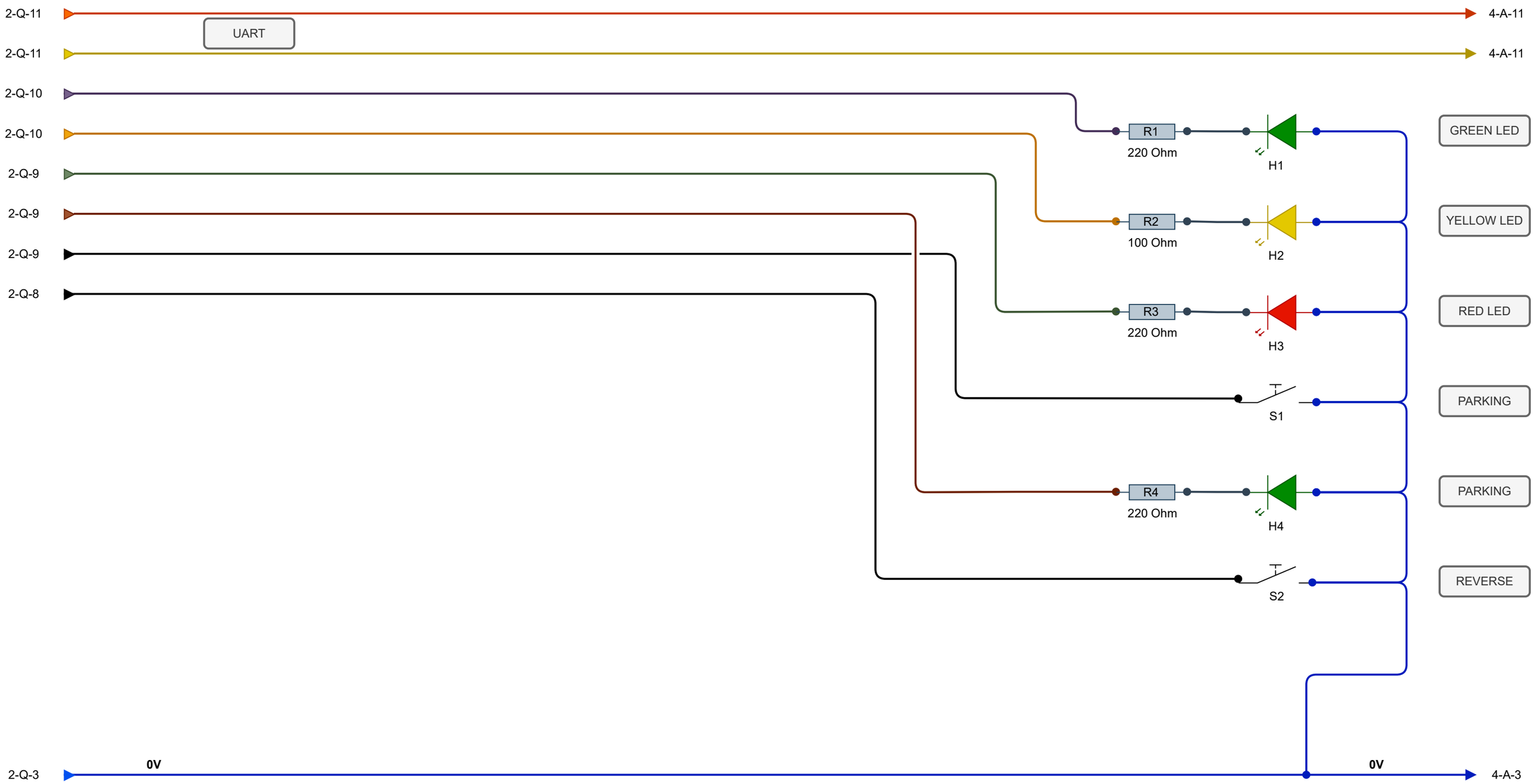

Rev.	Date	Reason for issue	MADE BY
A	19.04.25	Inital drawing	HHS

TITLE

SEMESTER PROSJEKT - KOBLINGSSKJEMA

Rogaland fylkeskommune

SHEET NO. 3 of 5

DRAWING NO. 2025-04-0001

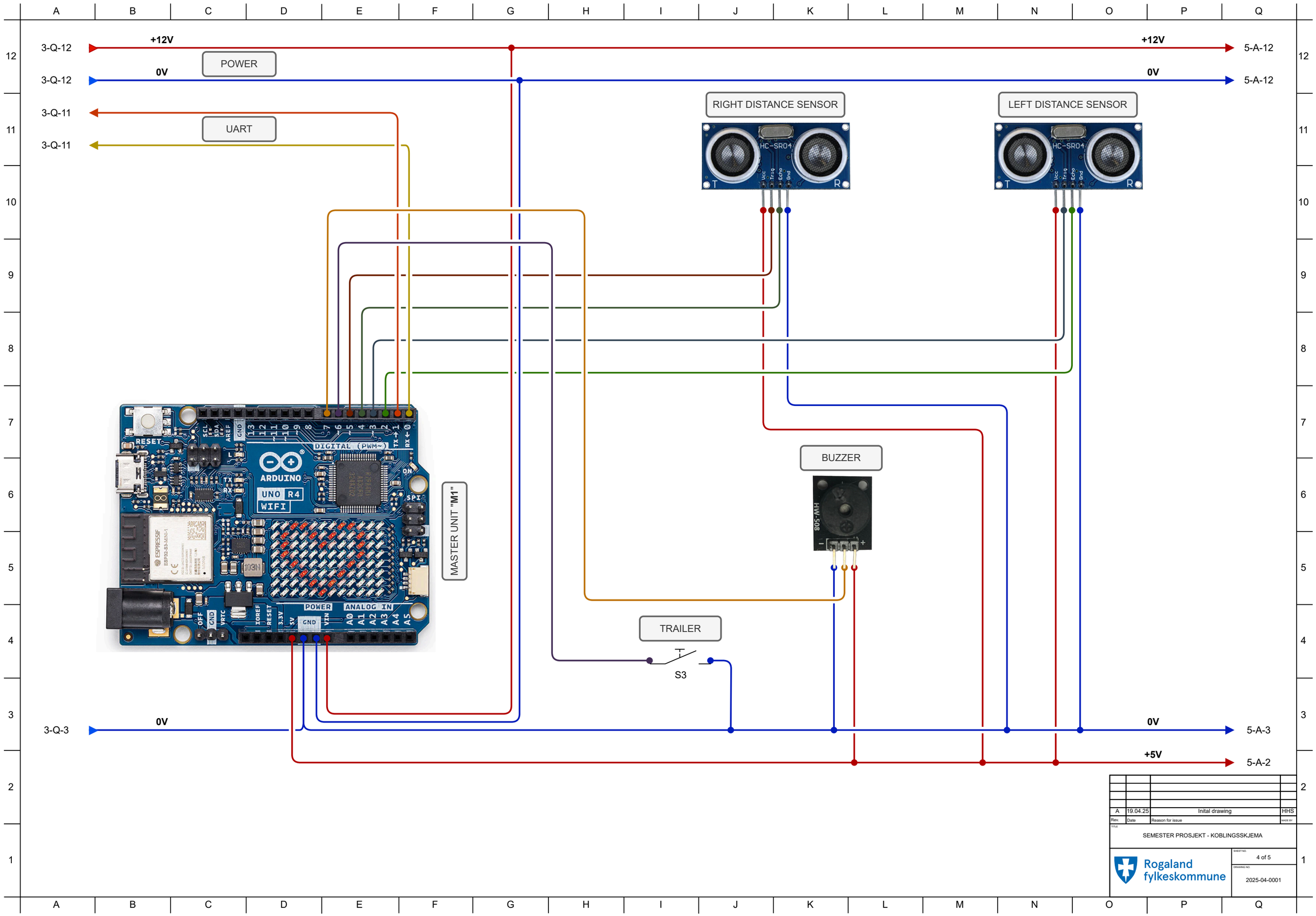

Rev.	Date	Reason for issue	MADE BY
A	19.04.25	Inital drawing	HHS

TITLE: SEMESTER PROSJEKT - KOBLINGSSKJEMA

Rogaland fylkeskommune

SHEET NO. 4 of 5

DRAWING NO. 2025-04-0001

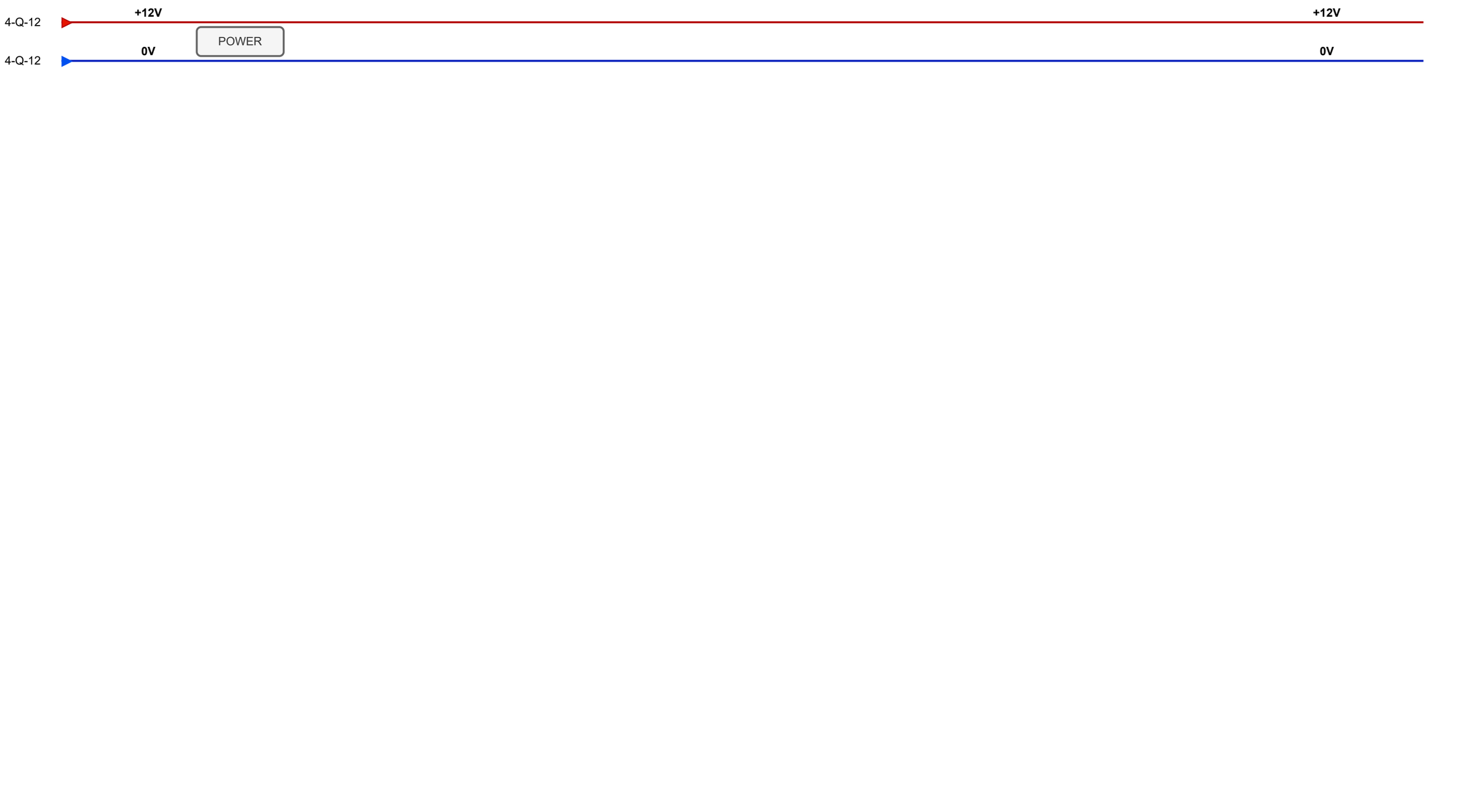

Rev.	Date	Reason for issue	MADE BY
A	19.04.25	Inital drawing	HHS

TITLE

SEMESTER PROSJEKT - KOBLINGSSKJEMA

Rogaland fylkeskommune

SHEET NO. 5 of 5

DRAWING NO. 2025-04-0001