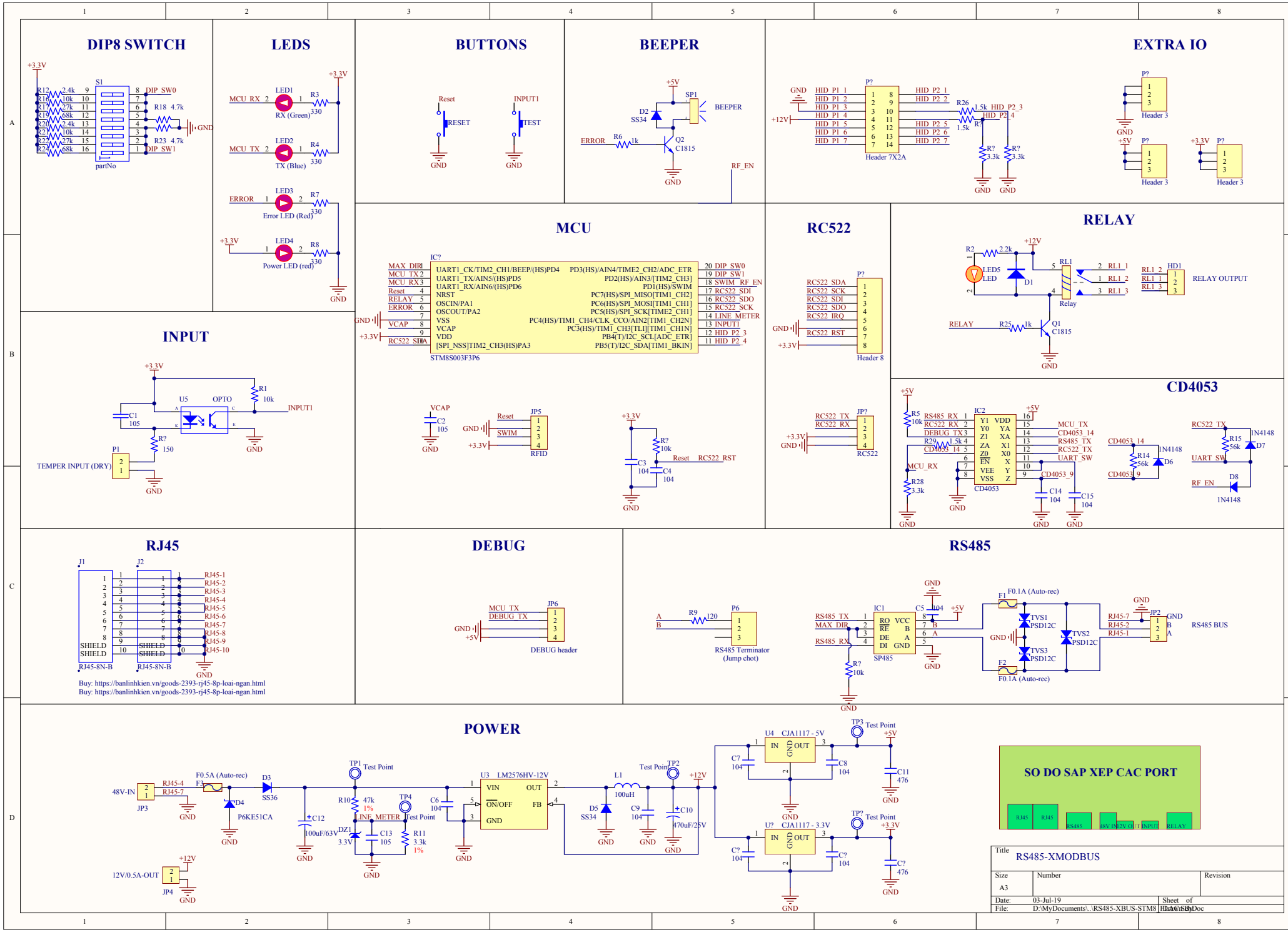
DIP8 SWITCH
LEDS
BUTTONS
BEEPER
EXTRA IO
MCU
RC522
RELAY
CD4053
INPUT
RJ45
DEBUG
RS485
POWER
SO DO SAP XEP CAC PORT
Title
RS485-XMODBUS
Size
A3
Number
Revision
Date: 03-Jul-19
File: D:\MyDocuments\..\RS485-XBUS-STM8.PrjPcb
Sheet of
Drawn By: